Please read carefully the following information to prevent injuries, damage to material and device as well as data loss:

Warning levels
Signal words and safety codes indicate the warning level and provide immediate information in terms of the probability of occurrence as well as the type and severity of the consequences if the measures to prevent hazards are not complied with.

DANGER Warns of a **directly** hazardous situation causing **death or serious injury**.

WARNING Warns of a **potentially** hazardous situation that **may** cause death or serious injury.

CAUTION Warns of a **potentially** hazardous situation that **may** cause minor injury.

IMPORTANT Warns of a **potential** situation that **may** cause material or environmental damage and disrupt operative processes.

1. Risk of electrical shock

WARNING **Contact with parts conducting electricity**
Risk of death by electrical shock

- Read the operating instructions prior to use
- Make sure the device has been de-energised prior to working on it
- Do not remove contact protection panels
- Avoid contact with conducting parts
- Do not bring plug contacts in contact with pointed and metal objects
- Use in intended environments only
- Operate the device using a power unit meeting the specifications of the type plate only!
- Keep the device/power unit away from humidity, liquid, vapour and dust
- Do not modify the device
- Do not connect the device during thunderstorms
- Approach specialist retailers if you require repairs

2. Hazards during assembly (if intended)

CAUTION **Sharp components**
Potential injuries to fingers or hands during assembly (if intended)

- Read the operating instructions prior to assembly
- Avoid coming into contact with sharp edges or pointed components
- Do not force components together
- Use suitable tools
- Use potentially enclosed accessories and tools only

3. Hazards caused by a development of heat

IMPORTANT **Insufficient device/power unit ventilation**
Overheating and failure of the device/power unit

- Prevent externally heating up components and ensure an exchange of air
- Do not cover the fan outlet and passive cooling elements
- Avoid direct sunlight on the device/power unit
- Guarantee sufficient ambient air for the device/power unit
- Do not place objects on the device/power unit

4. Hazards caused by very small parts and packaging

WARNING **Risk of suffocation**
Risk of death by suffocation or swallowing

- Keep small parts and accessories away from children
- Store/dispose of plastic bags and packaging in an area that is inaccessible to children
- Do not hand over small parts and packaging to children

5. Potential data loss

IMPORTANT **Data loss during commissioning**
Potentially irreversible data loss

- Always comply with the information in the operating instructions/quick installation guide
- Use the product only wonce the specifications have been met
- Back up data prior to commissioning
- Back up data prior to connecting new hardware
- Use accessories enclosed with the product

6. Cleaning the device

IMPORTANT **Harmful cleaning agents**
Scratches, discolouration, damage caused by moisture or short circuit in the device

- Disconnect the device prior to cleaning
- Aggressive or intense cleaning agents and solvents are unsuitable
- Make sure there is no residual moisture after cleaning
- We recommend cleaning devices using a dry, anti-static cloth

7. Disposing of the device

IMPORTANT **Environmental pollution, unsuitable for recycling**
Potential environmental pollution caused by components, recycling circle interrupted
This icon on product and packaging indicates that this product must not be disposed of as part of domestic waste. In compliance with the Waste Electrical and Electronic Equipment Directive (**WEEE**) this electrical device and potentially included batteries must not be disposed of in conventional, domestic waste or **recycling waste**. If you would like to dispose of this product and potentially included batteries, please return it to the retailer or your local waste disposal and recycling point.

The included batteries must be completely discharged before return.
Take precaution to protect the batteries from short circuits (e.g. by insulating the contact poles with adhesive tape)

If you have any questions, please do not hesitate to contact our support at
support@raidsonic.de or visit our website at **www.icybox.de**.

ICY BOX

Manual

Counterbalance monitor arm

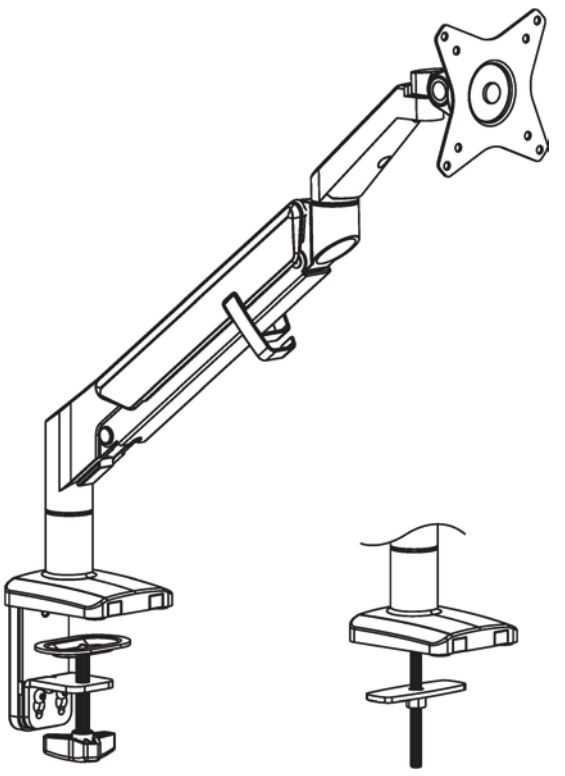

IB-MS513-TSS

VESA compatible
75x75 / 100x100

32" MAX

1-9kg (2.2-19.8 lbs) RATED

5

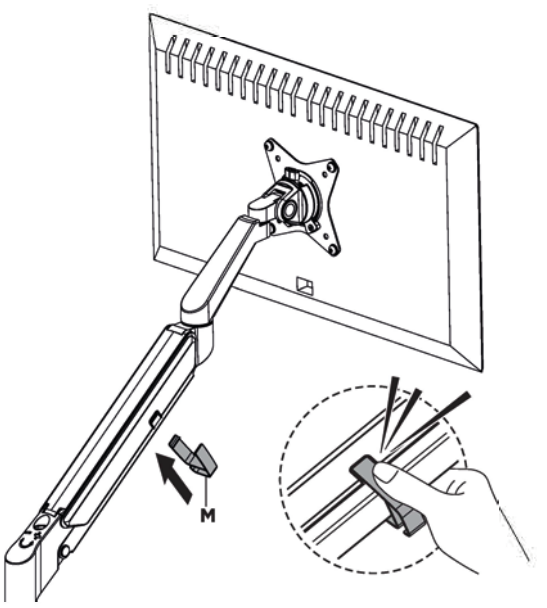

6

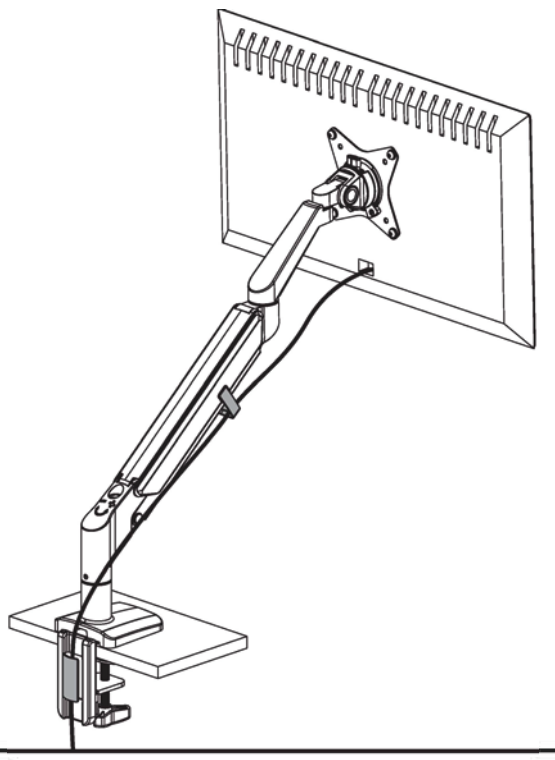

7

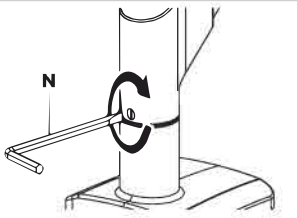

Tighten the limiting screw (do not overtighten).

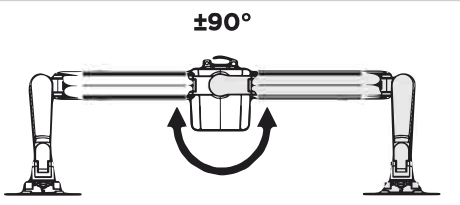

Arm can rotate by 180°.

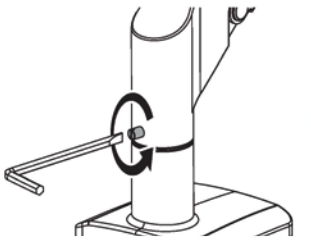

Remove or loosen the limiting screw.

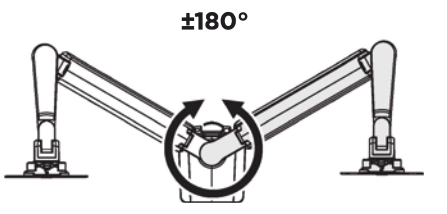

Arm can rotate freely.

8

Note: *If the display does not stop at your desired position, tighten the screws as shown.*

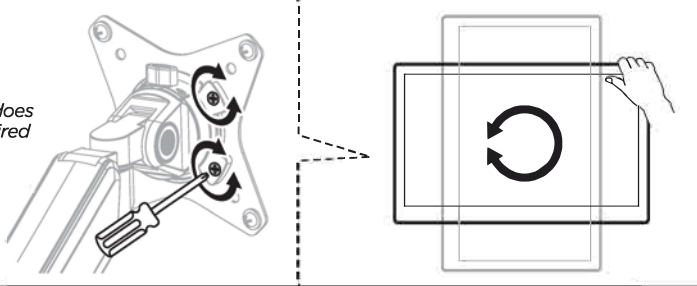

Note: *If the display does not stop at your desired position, tighten the screw as shown.*

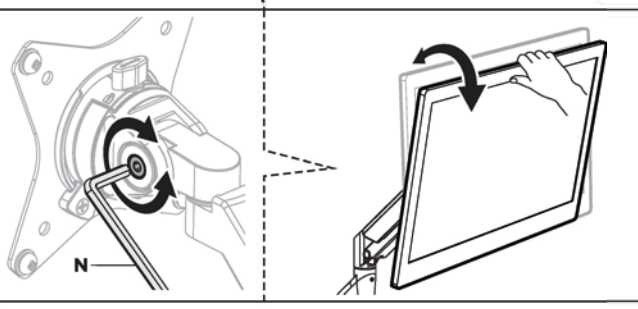

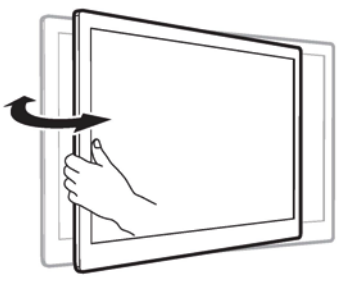

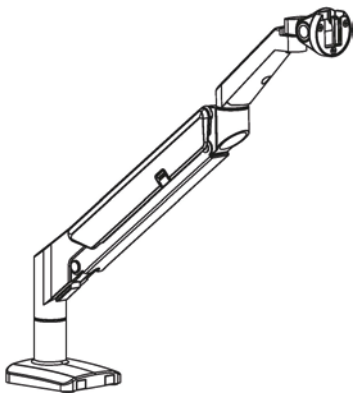

A (x1)

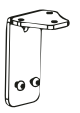

B (x1)



C (x1)

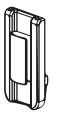

D (x1)



E (x1)



F (x3)

G (x4)

H (x1)



I (x1)



J (x1)

K (x1)

L (x1)



M (x1)



N (x1)
4 mm



O (x1)
6 mm



P (x1)



M-A (x4)
M4x12



M-B (x4)
M5x12



M-C (x4)
D5

1

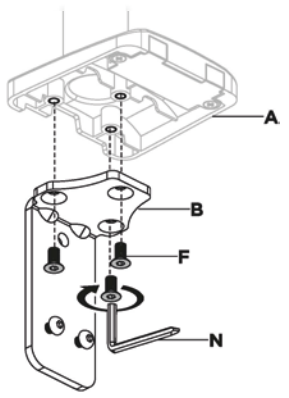

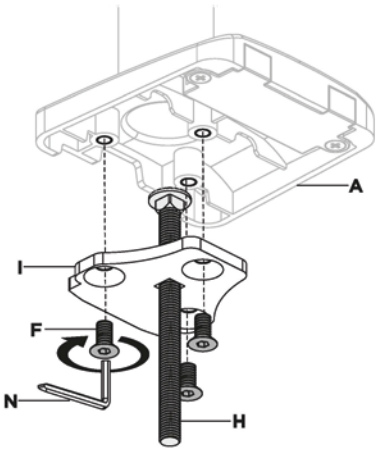

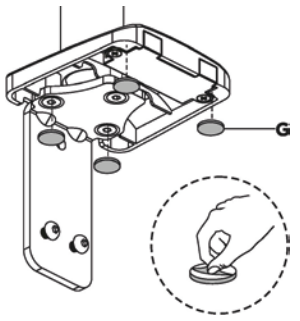

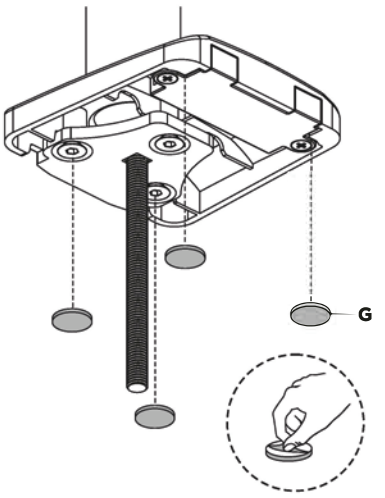

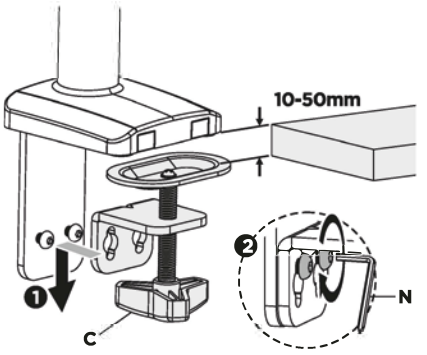

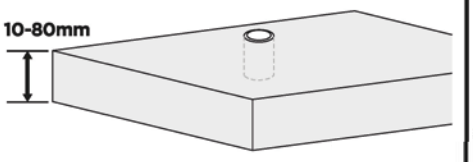

OR

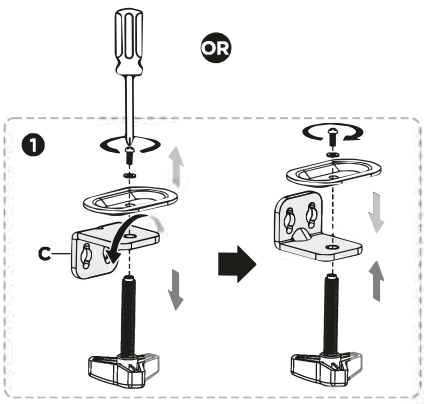

OR

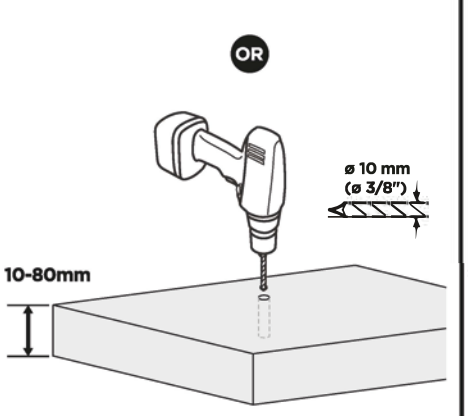

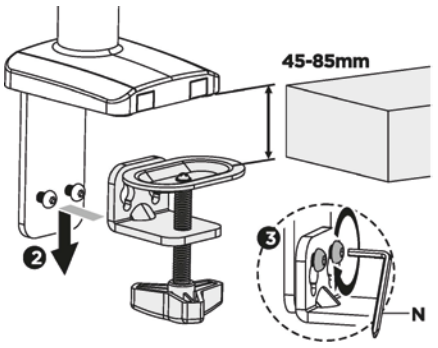

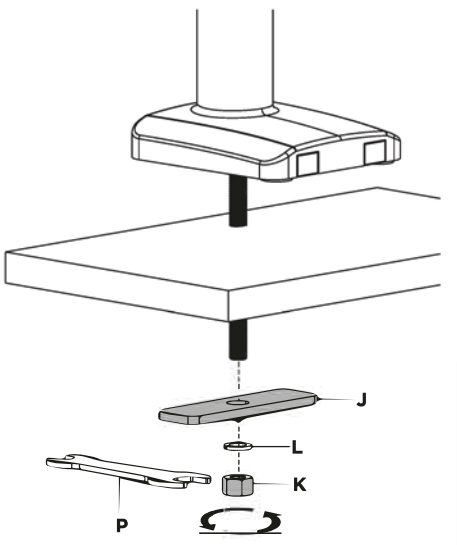

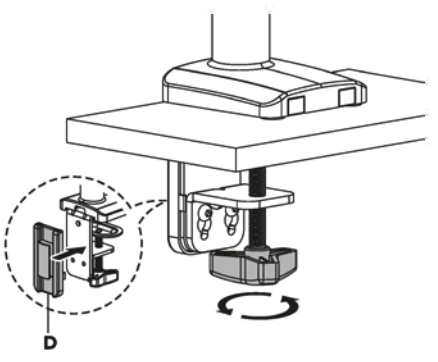

2

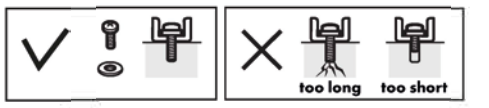

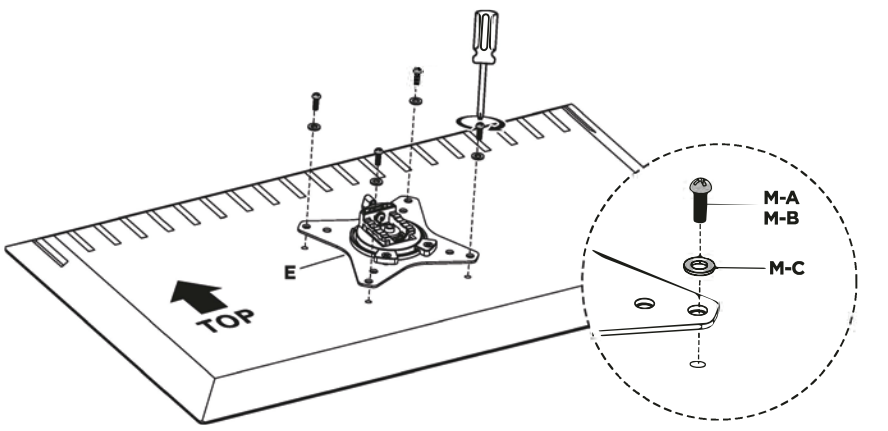

3

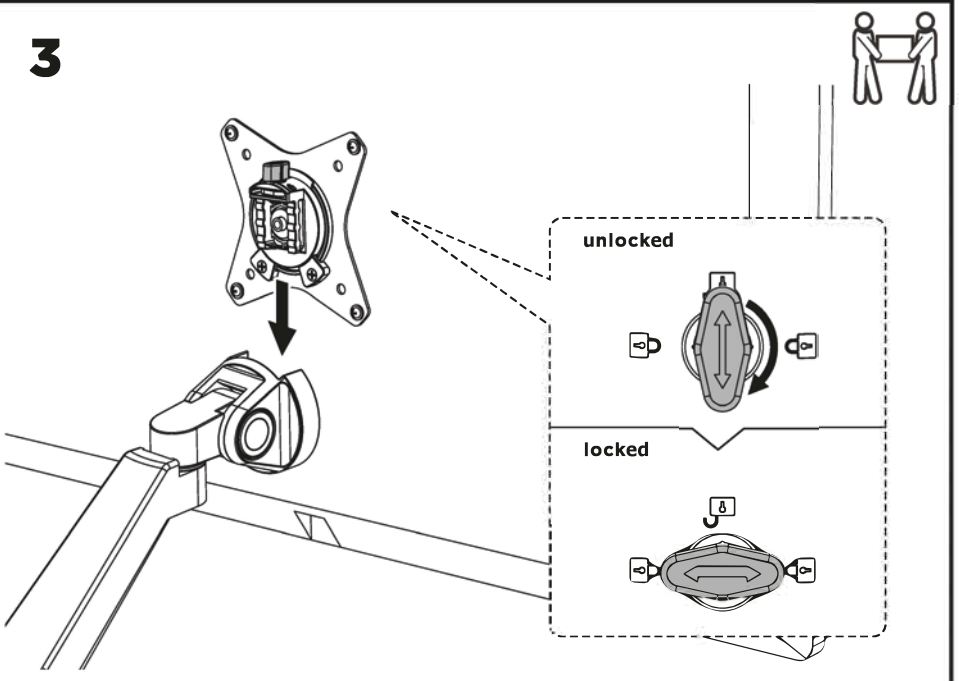

4

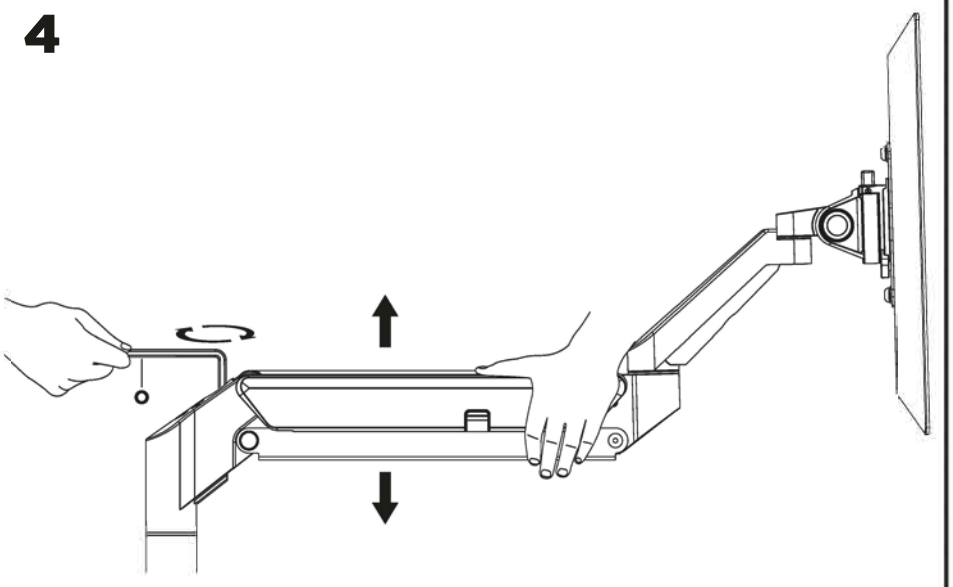

To properly balance the arm with monitors mounted, adjust the spring tension using the supplied allen wrench as follows:

First, position and firmly hold the arm horizontally as shown. Ask for assistance if required.



CAUTION *To avoid damage to monitors or mount, always keep the arm in a horizontal position while making adjustments. Again, ask for assistance if required.*

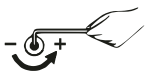

*If the arm **drops,** turn the adjustment screw counter-clockwise until it stays in a horizontal position.*



*If the arm **rises,** turn the adjustment screw clockwise until it stays in a horizontal position.*

CAUTION ***DO NOT** overtighten the screws.*