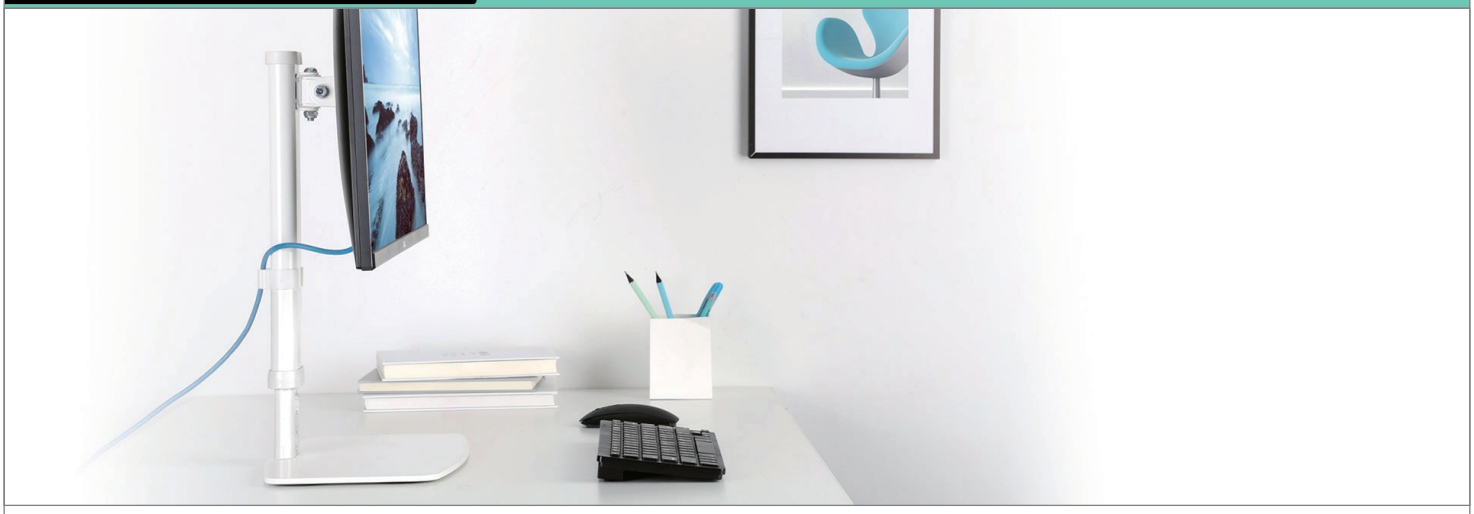

ICY BOX
IB-MS113WH-T

Free-standing monitor stand for one monitor up to 27" (68 cm)



Key features

- Monitor stand with free standing base, for one monitor up to 27"
- Detachable VESA® plate design enables easy installation
- 10 height settings for optimal view on the monitor
- Cable management elegantly guides any cables
- Non-slip silicone pads protect the work surface from scratches and scuffs
- A heavy base provides stability with up to 6 kg weight capacity

Packing content
IB-MS113WH-T, allen wrench, set of screws, quick installation guide

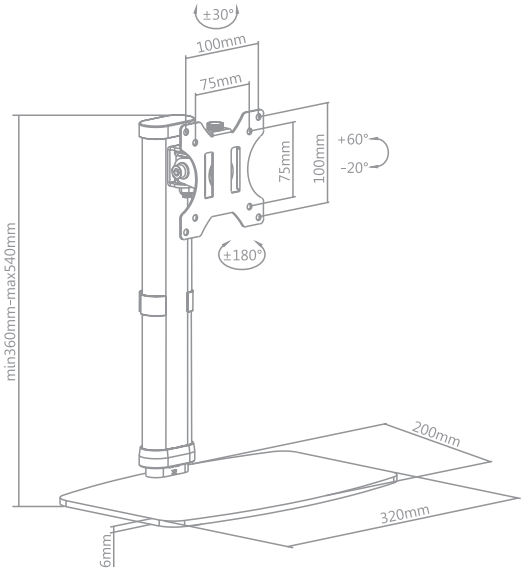

Technical data

Model	IB-MS113WH-T
Article no.	60875
EAN code	4250078172086
Brand	ICY BOX
Colour	White
Material	Plastic, steel
Maximum size of monitor	17" – 27"
Number of monitors	1
Max. weight of monitor	6 kg
Mounting	Free-standing
VESA® compatible	Yes, 75x75, 100x100
Swivel (Hinge) - VESA®	+30° – -30°
Tilt (Hinge) - VESA®	+60° – -20°
Rotate (Pivot) - VESA®	+180° – -180°
Height adjustment VESA®	360 - 500 mm
Max arm height	540 mm

RaidSonic Technology GmbH • Kurt-Fischer-Straße 50 • 22926 Ahrensburg / Germany
Telephone: +49-(0)4102 – 468 900 (Sales) • Fax: +49-(0)4102 – 468 901 • info@raidsonic.de • www.icybox.de
Offers and deliveries are only done under our General Terms and Conditions. Errors and omissions excepted.

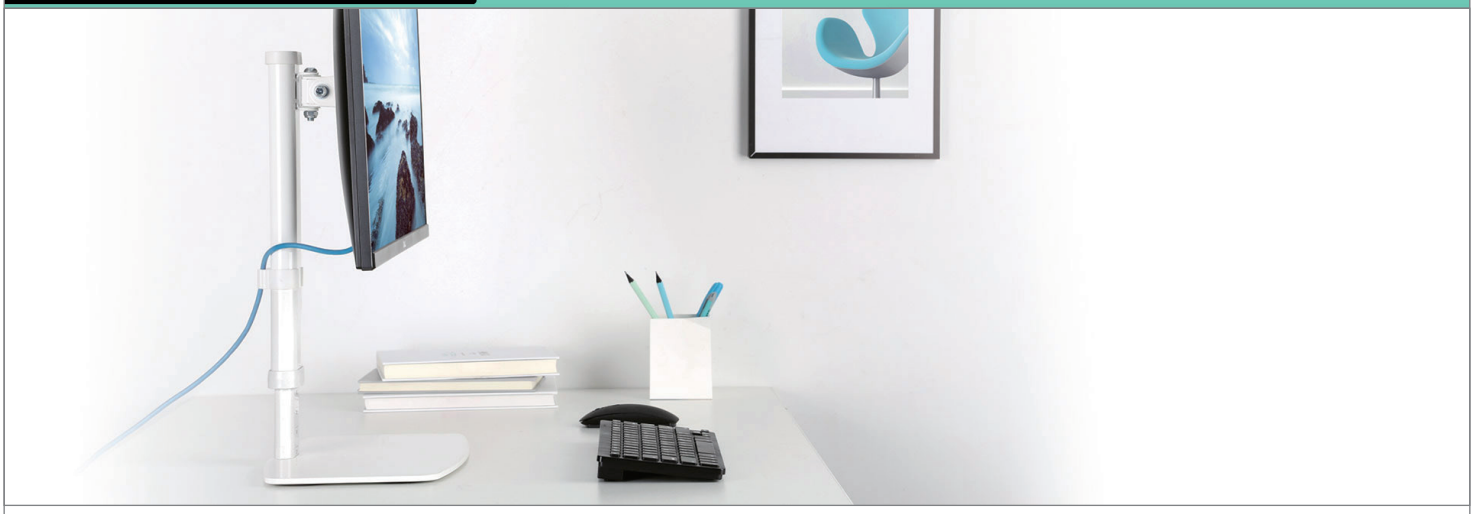

ICY BOX **IB-MS113WH-T**
Free-standing monitor stand for one monitor up to 27" (68 cm)



At eye level

TThe monitor stand is perfectly designed for a screen diagonal of up to 27" (68 cm). With a maximum monitor arm height of 540 mm, it is ideal for adjusting your monitor to your eye level. The Quick Release VESA® plate ensures a quick installation of the monitor.



No scratches

Thanks to the foam padding on the underside of the stand, your desk remains protected from scratches. In addition, the foam padding ensures that the stand does not shift, especially when you want to adjust the monitor or reposition it on the desk.



Solid construction

Due to its long-lasting metal construction, the IB-MS113WH-T is very stable. The heavy stand has the advantage that you do not have to mount an additional bracket on the tabletop or even drill holes in the desk or worktop. Accordingly, the monitor stand can be set up quickly.

Logistical data

Packing unit:	4 pcs./carton	**Dimension/carton:**	370x450x170 mm
Total weight:	17.9 kg/carton	**Dimension** (with packing)**:**	220x360x80 mm
Gross weight (with packing)**:**	4.38 kg	**Dimension of article:**	200x320x540 mm
Net weight:	3.90 kg	**Country of origin:**	China

RaidSonic Technology GmbH • Kurt-Fischer-Straße 50 • 22926 Ahrensburg / Germany
Telephone: +49-(0)4102 – 468 900 (Sales) • Fax: +49-(0)4102 – 468 901 • info@raidsonic.de • www.icybox.de
Offers and deliveries are only done under our General Terms and Conditions. Errors and omissions excepted.

RaidSonic Technology GmbH