User Guide



IdeaCentre 5 (14L, 05)

Read this first

Before using this documentation and the product it supports, ensure that you read and understand the following:

- Appendix A “Important safety information” on page 49
- *Safety and Warranty Guide*
- *Setup Guide*

First Edition (March 2020)

© Copyright Lenovo 2020.

LIMITED AND RESTRICTED RIGHTS NOTICE: If data or software is delivered pursuant to a General Services Administration “GSA” contract, use, reproduction, or disclosure is subject to restrictions set forth in Contract No. GS-35F-05925.

Contents

About this documentation iii

Chapter 1. Meet your computer 1

Front 1
Rear 3
Features and specifications 4
Statement on USB transfer rate 4

Chapter 2. Get started with your computer 5

Get started with Windows 10 5
Windows account 5
Windows user interface 6
Connect to networks 7
Connect to the wired Ethernet 7
Connect to Wi-Fi networks (for selected models) 7
Use Lenovo Vantage 7
Use multimedia 8
Use audio 8

Chapter 3. Explore your computer . . . 9

Manage power 9
Set power button behaviors 9
Set the power plan 9
Transfer data 9
Connect to a Bluetooth-enabled device. 9
Use the optical drive (for selected models) . . 10
Use a media card (for selected models) 10
Purchase accessories 11

Chapter 4. Troubleshooting, diagnostics, and recovery 13

Basic procedure for resolving computer problems 13
Troubleshooting 13
Startup problems 14
Audio problems 15
Network problems 15
Performance problems 18
Storage drive problems 19
CD or DVD problems 19
Serial connector problems 20
Software problems 20
Recovery 20
Restore system files and settings to an earlier point 21
Restore your files from a backup 21
Reset your computer 21
Use advanced options 21
Windows automatic recovery 21
Create and use a recovery USB device 21
Update the device driver 22

Chapter 5. CRU replacement 23

What are CRUs 23
Replace a CRU 24
Power cord 24
Computer cover 25
Front bezel 26
Storage drive 28
Storage drive bracket 30
M.2 solid-state drive 32
Power supply assembly 34
Coin-cell battery 35
Optical drive 38
Heat sink assembly 39
PCI-Express card 40
Memory module 41

Chapter 6. Help and support 45

Self-help resources 45
Call Lenovo 46
Before you contact Lenovo 46
Lenovo Customer Support Center 46
Purchase additional services 47

Appendix A. Important safety information 49

Appendix B. Accessibility and ergonomic information 63

Appendix C. Compliance information 67

Appendix D. Notices and trademarks 77

© Copyright Lenovo 2020

About this documentation

- Illustrations in this documentation might look different from your product.
- Depending on the model, some optional accessories, features, and software programs might not be available on your computer.
- Depending on the version of operating systems and programs, some user interface instructions might not be applicable to your computer.
- Documentation content is subject to change without notice. Lenovo makes constant improvements on the documentation of your computer, including this *User Guide*. To get the latest documentation, go to: https://pcsupport.lenovo.com
- Microsoft® makes periodic feature changes to the Windows® operating system through Windows Update. As a result, some information in this documentation might become outdated. Refer to Microsoft resources for the latest information.
- This documentation applies to the following product models:

Model name	**Machine Types (MT)**	**Machine Type (MT) for Energy Star**
IdeaCentre 5 14IMB05	90NA, 90NQ	90NQ

© Copyright Lenovo 2020

Chapter 1. Meet your computer

Front

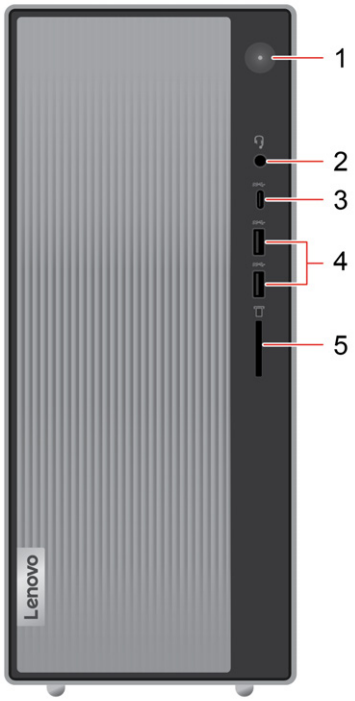

1. Power button	Press to turn on the computer. To turn off the computer, open the **Start** menu, click **Power**, and then select **Shut down**. The indicator in the power button shows the system status of your computer. • **On:** The computer is on. • **Off:** The computer is off or in hibernation mode. • **Blinking:** The computer is in sleep mode.
2. Headset connector	Connect a headset or headphones to your computer.
3. USB-C™ connector (USB 3.2 Gen 1)	• Charge USB-C compatible devices with the output voltage and current of 5 V and 3 A. • Transfer data at USB 3.2 speed, up to 5 Gbps. • Connect to USB-C accessories to help expand your computer functionality. To purchase USB-C accessories, go to https://www.lenovo.com/accessories.

© Copyright Lenovo 2020

4. USB 3.2 connectors Gen 1 (2)	Connect USB-compatible devices, such as a USB keyboard, USB mouse, USB storage device, or USB printer.
5. 3 in 1 card reader slot*	Supported cards: • Secure Digital (SD) card • Secure Digital eXtended-Capacity (SDXC) UHS-1 card • Secure Digital High-Capacity (SDHC) UHS-1 card

* for selected models

Rear

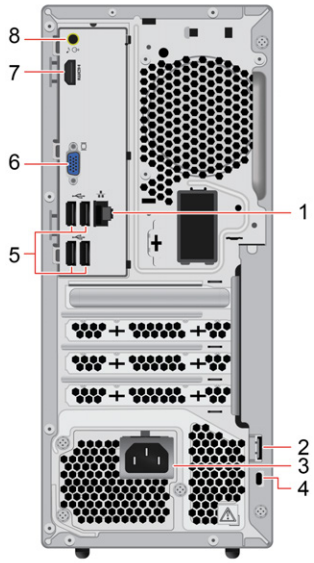

1. Ethernet connector	Connect to a local area network (LAN).
2. Padlock loop	Lock the computer cover through a padlock.
3. Power cord connector	Connect the power cord to your computer for power supply.
4. Security-lock slot	Lock your computer to a desk, table, or other fixtures through a Kensington-style cable lock.
5. USB 2.0 connectors (4)	Connect USB-compatible devices, such as a USB keyboard, USB mouse, USB storage device, or USB printer.
6. VGA-out connector	Send video signals from the computer to another video device, such as a monitor.
7. HDMI™ 1.4 out connector	Send audio and video signals from the computer to another audio or video device, such as a high-performance monitor. For more information, see https://www.hdmi.org/manufacturer/hdmi_1_4/index.aspx.
8. Audio line-out connector	Send audio signals from the computer to external devices, such as powered stereo speakers, headphones, or multimedia keyboards. To connect a stereo system or other external recording device, connect a cable between the audio line-in connector of the device and the audio line-out connector of the computer. **Note:** If your computer has both an audio line-out connector and a headset or headphone connector, always use the headset or headphone connector for earphones, headphones, or a headset. The headphone connector does not support headset microphones.

Features and specifications

Hardware configuration	1. Right-click the **Start** button to open the Start context menu. 2. Click **Device Manager**. Type the administrator password or provide confirmation if prompted.
Power supply	260 W / 310 W / 380 W
Adaptability for power supply	• Mainland China: 220 V±22 V, 50 Hz±1 Hz • Adaptive voltage positioning: 90 V to 264 V, 50/60 Hz • With voltage selection switch: 90 V to 264 V, 50 Hz±1 Hz
Microprocessor	To view the microprocessor information of your computer, right-click the **Start** button and then click **System**.
Memory	Double data rate 4 (DDR4) dual in-line memory module (DIMM)
Storage device	To view the storage drive capacity of your computer, right-click the **Start** button to open the Start context menu and then click **Disk Management**. **Note:** The storage drive capacity indicated by the system is less than the nominal capacity.
Expansion	• 3 in 1 card reader* • Memory slots • M.2 solid-state drive slot • Optical drive* • Storage drive bay
Network features	• Bluetooth • Ethernet LAN • Wireless LAN

* for selected models

Statement on USB transfer rate

Depending on many factors such as the processing capability of the host and peripheral devices, file attributes, and other factors related to system configuration and operating environments, the actual transfer rate using the various USB connectors on this device will vary and will be slower than the data rate listed below for each corresponding device.

USB device	Data rate (Gbit/s)
3.1 Gen 1/3.2 Gen 1	5
3.1 Gen 2/3.2 Gen 2	10
3.2 Gen 2 × 2	20

Chapter 2. Get started with your computer

Get started with Windows 10

Learn the basics of Windows 10 and start working with it right away. For more information about Windows 10, see the Windows help information.

Windows account

A user account is required to use the Windows operating system. It can either be a Windows user account or a Microsoft account.

Windows user account

When you start Windows for the first time, you are prompted to create a Windows user account. This first account you created is of the “Administrator” type. With an Administrator account, you can create additional user accounts or change account types by doing the following:

1. Open the **Start** menu and select **Settings → Accounts → Family & other users**.
2. Follow the on-screen instructions.

Microsoft account

You can also log in to the Windows operating system with a Microsoft account.

To create a Microsoft account, go to the Microsoft sign-up page at https://signup.live.com and follow the on-screen instructions.

With a Microsoft account, you can:

- Enjoy one-time signing in if you are using other Microsoft services, such as OneDrive, Skype, and Outlook.com.
- Sync personalized settings across other Windows-based devices.

© Copyright Lenovo 2020

Windows user interface

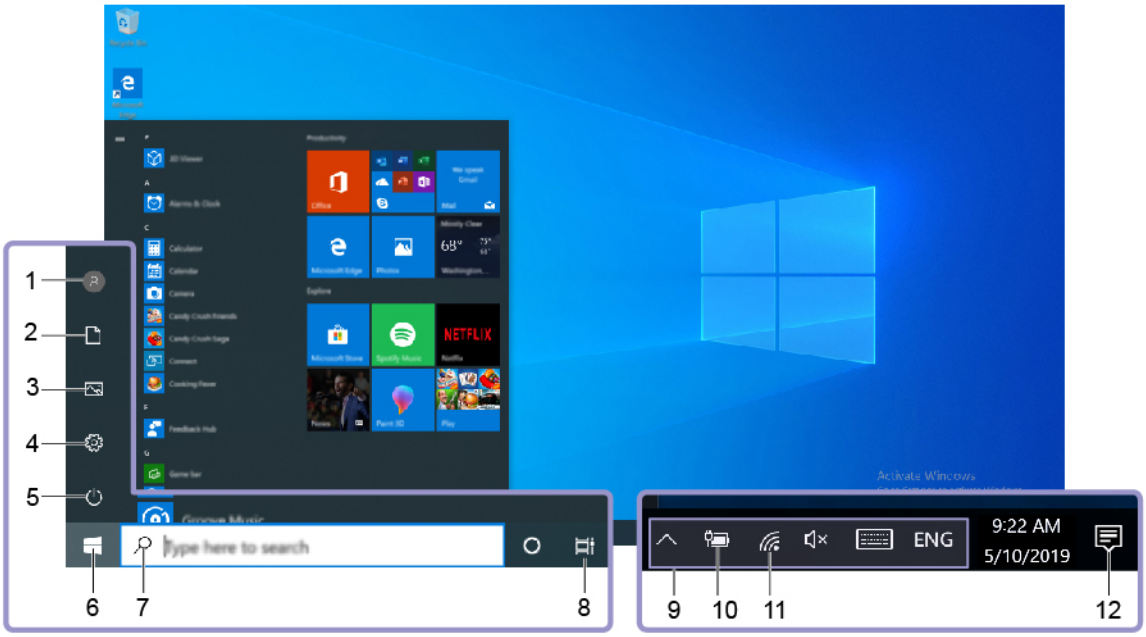

1. **Account**	Change account settings, lock the computer, or sign out from the current account.
2. **Documents**	Open the **Documents** folder, a default folder to save your received files.
3. **Pictures**	Open the **Pictures** folder, a default folder to save your received pictures.
4. **Settings**	Launch Settings.
5. **Power**	Shut down, restart, or put the computer into sleep mode.
6. **Start button**	Open the **Start** menu.
7. **Windows Search**	Type what you are looking for in the search box and get search results from your computer and the Web.
8. **Task View**	Display all opened apps and switch among them.
9. **Windows notification area**	Display notifications and status of some features.
10. **Battery status icon**	Display power status and change battery or power settings. When your computer is not connected to ac power, the icon changes to .
11. **Network icon**	Connect to an available wireless network and display the network status. When connected to a wired network, the icon changes to .
12. **Action center**	Display the latest notifications from apps and provide quick access to some features.

Open the Start menu

- Click the **Start** button.
- Press the Windows logo key on the keyboard.

Open the Start context menu

Right-click the **Start** button.

Access Control Panel

- Open the **Start** menu and click **Windows System → Control Panel**.
- Use Windows Search.

Launch an app

- Open the **Start** menu and select the app you want to launch.
- Use Windows Search.

Connect to networks

Your computer helps you connect to the world through a wired or wireless network.

Connect to the wired Ethernet

Connect your computer to a local network through the Ethernet connector on your computer with an Ethernet cable.

Connect to Wi-Fi networks (for selected models)

1. Click the network icon in the Windows notification area. A list of available wireless networks is displayed.
2. Select a network available for connection. Provide required information, if needed.

Use Lenovo Vantage



The preinstalled Lenovo Vantage is a customized one-stop solution to help you maintain your computer with automated updates and fixes, configure hardware settings, and get personalized support.

Access Lenovo Vantage

Open the **Start** menu and click **Lenovo Vantage**. You also can type `Lenovo Vantage` in the search box.

To download the latest version of Lenovo Vantage, go to Microsoft Store and search by the app name.

Key features

Lenovo Vantage enables you to:

- Know the device status easily and customize device settings.
- Download and install UEFI BIOS, firmware and driver updates to keep your computer up-to-date.
- Monitor your computer health, and secure your computer against outside threats.
- Look up warranty status (online).
- Access *User Guide* and helpful articles.

Notes:

- The available features vary depending on the computer model.
- Lenovo Vantage makes periodic updates of the features to keep improving your experience with your computer. The description of features might be different from that on your actual user interface.

Use multimedia

Use your computer for business or entertainment with the devices (such as a camera, a monitor, or speakers).

Use audio

To enhance the audio experience, connect speakers, headphones, or a headset to the audio connector.

Adjust the volume

1. Click the volume icon in the Windows notification area on the taskbar.
2. Follow the on-screen instructions to adjust the volume. Click the speaker icon to mute the audio.

Change the sound settings

1. Go to **Control Panel** and view by category.
2. Click **Hardware and Sound → Sound**.
3. Change the settings as you prefer.

Chapter 3. Explore your computer

Manage power

Use the information in this section to achieve the best balance between performance and power efficiency.

Set power button behaviors

You can define what the power button does according to your preference. For example, by pressing the power button, you can turn off the computer or put the computer to sleep or hibernation mode.

To change what the power button does:

1. Go to **Control Panel** and view by large icons or small icons.
2. Click **Power Options → Choose what the power buttons do**.
3. Change the settings as you prefer.

Set the power plan

For ENERGY STAR® compliant computers, the following power plan takes effect when your computers have been idle for a specified duration:

Table 1. Default power plan (when plugged into ac power)

• Turn off the display: After 10 minutes • Put the computer to sleep: After 25 minutes

To awaken the computer from Sleep mode, press any key on your keyboard.

To reset the power plan to achieve the best balance between performance and power saving:

1. Go to **Control Panel** and view by large icons or small icons.
2. Click **Power Options**, and then choose or customize a power plan of your preference.

Transfer data

Quickly share your files using the built-in Bluetooth technology among devices with the same features. You also can install a disc or media card to transfer data.

Connect to a Bluetooth-enabled device

You can connect all types of Bluetooth-enabled devices to your computer, such as a keyboard, a mouse, a smartphone, or speakers. To ensure that the connection is successful, place the devices 10 meters (33 feet), at most, from the computer.

1. Turn on Bluetooth on the computer.
   a. Open the **Start** menu, and then click **Settings → Devices → Bluetooth & other devices**.
   b. Turn on the **Bluetooth** switch.
2. Click **Add Bluetooth or other device → Bluetooth**.
3. Select a Bluetooth device, and then follow the on-screen instructions.

© Copyright Lenovo 2020

Your Bluetooth device and computer will automatically connect the next time if the two devices are in range of each other with Bluetooth turned on. You can use Bluetooth for data transfer or remote control and communication.

Use the optical drive (for selected models)

If your computer has an optical drive, read the following information.

Know the type of your optical drive

1. Right-click the **Start** button to open the **Start** context menu.
2. Click **Device Manager**. Type the administrator password or provide confirmation, if prompted.

Install or remove a disc

1. With the computer on, press the eject/close button on the optical drive. The tray slides out of the drive.
2. Insert a disc into the tray or remove a disc from the tray, and then press the eject/close button again to close the tray.

Note: If the tray does not slide out of the drive when you press the eject/close button, turn off the computer. Then, insert a straightened paper clip into the emergency-eject hole adjacent to the eject/close button. Use the emergency eject only in an emergency.

Record a disc

1. Insert a recordable disc into the optical drive that supports recording.
2. Do one of the following:
   - Open the **Start** menu, and then click **Settings → Devices → AutoPlay**. Select or turn on **Use AutoPlay for all media and devices**.
   - Open Windows Media Player.
   - Double-click the ISO file.
3. Follow the on-screen instructions.

Use a media card (for selected models)

If your computer has a SD-card slot, read the following information.

Install a media card

1. Locate the SD-card slot.
2. Ensure that the metal contacts on the card are facing the ones in the SD-card slot. Insert the card firmly into the SD-card slot until it is secured in place.

Remove a media card

Attention: Before removing a media card, eject the card from the Windows operating system first. Otherwise, data on the card might get corrupted or lost.

1. Click the triangular icon in the Windows notification area to show hidden icons. Then, right-click the **Safely Remove Hardware and Eject Media** icon.
2. Select the corresponding item to eject the card from the Windows operating system.
3. Press the card and remove it from your computer. Store the card safely for future use.

Purchase accessories

Lenovo has a number of hardware accessories and upgrades to help expand the capabilities of your computer. Options include memory modules, storage devices, network cards, power adapters, keyboards, mice, and more.

To shop at Lenovo, go to https://www.lenovo.com/accessories.

Chapter 4. Troubleshooting, diagnostics, and recovery

This chapter provides solutions to resolve computer problems. Use the basic procedure as a starting point for resolving computer problems.

Basic procedure for resolving computer problems

Prerequisite

Before you start, read Appendix A “Important safety information” on page 49 and print the following instructions.

1. Check that:
   a. The cables for all connected devices are connected correctly and securely.
   b. All components have been reassembled correctly.
   c. All connected devices that require ac power are connected to properly grounded and working electrical outlets.
   d. All connected devices are enabled in UEFI BIOS.
2. Use an antivirus program to see if the computer has been infected by a virus. If the program detects a virus, remove the virus.
3. Go to “Troubleshooting” on page 13 and follow the instructions for the type of problem you are experiencing.
4. Recover your operating system. See “Recovery” on page 20.
5. If the problem persists, contact Lenovo. See Chapter 6 “Help and support” on page 45.

Troubleshooting

Use the troubleshooting information to find solutions to problems that have definite symptoms.

© Copyright Lenovo 2020

Startup problems

Problem	Solution
The computer does not start up when you press the power button.	• Ensure that the power cord is correctly connected to the rear of the computer and to a working electrical outlet. • If the computer has a secondary power switch on the rear of the computer, ensure that it is switched on. • The power indicator on the front of the computer is on. • The computer voltage matches the voltage available at the electrical outlet for your country or region.
The operating system does not start up from the correct storage drive or fails to start up	• Ensure that all storage drive signal cables and power cables are connected correctly. • Ensure that the storage drive the computer starts up from is listed as the first startup device in UEFI BIOS. • In rare cases, the storage drive with the operating system might get corrupted or damaged. In such cases, you might need to replace the storage drive. • If the computer is installed with an Optane memory: – Ensure that the Optane memory is not removed. – Ensure that the Optane memory is not damaged. Check the Optane memory using diagnostic tools.
The computer beeps multiple times before the operating system starts up.	Ensure that no keys are stuck.

Audio problems

Problem	Solution
The audio cannot be heard on the Windows operating system.	• If you are using powered external speakers that have an On/Off control, ensure that: – The On/Off control is set to the **On** position. – The speaker power cable is connected to a properly grounded, functional ac electrical outlet. • If your external speakers have a volume control, ensure that the volume is not set too low. • Click the volume icon in the Windows notification area on the taskbar. Check the speaker and volume settings. Do not mute the speaker or set the volume at a very low level. • If your computer has a front audio panel, ensure that the volume is not set too low. • Ensure that your external speakers (and headphones, if used) are connected to the correct audio connector on the computer. Most speaker cables are color-coded to match the audio connector. **Note:** When external-speaker or headphone cables are connected to the audio connector, the internal speaker, if present, is disabled. In most cases, if an audio adapter is installed in one of the expansion slots, the audio function built into the system board is disabled. Therefore, you must use the audio connectors on the audio adapter. • Ensure that the program you are running is designed for use in the Microsoft Windows operating system. If the program is designed to run in DOS, the program does not use the Windows sound feature. The program must be configured to use SoundBlaster Pro or SoundBlaster emulation. • Ensure that the audio device drivers are correctly installed.
The sound does not come from the headset or headphones.	Select the headset or headphones as the default audio output device in advanced sound settings.
The sound comes from one of the external speakers.	• Ensure that the speaker cable is inserted completely into the connector on the computer. • Ensure that the cable that connects the left speaker to the right speaker is securely connected. • Ensure that the balance settings are set correctly. 1. Right-click the volume icon in the Windows notification area on the taskbar. Then, click **Open Volume Mixer** and select the desired speaker. 2. Click the speaker icon on top of the volume control, and then click the **Levels** tab.

Network problems

Note: The Wi-Fi and Bluetooth features are optional.

Problem	Solution
The computer cannot connect to an Ethernet LAN.	• Connect the cable from the Ethernet connector to the RJ45 connector of the hub. • Enable the Ethernet LAN feature in UEFI BIOS. • Enable the Ethernet LAN adapter. 1. Go to **Control Panel** and view by large icons or small icons. 2. Click **Network and Sharing Center** → **Change adapter settings**. 3. Right-click the Ethernet LAN adapter icon and click **Enable**. • Update or reinstall the Ethernet LAN driver. • Install all networking software that is necessary for your network environment. Check with your LAN administrator for the necessary networking software. • Set the same duplex for the switch port and the adapter. If you configured the adapter for full duplex, ensure that the switch port is also configured for full duplex. Setting a wrong duplex mode might degrade performance, cause data loss, or result in lost connections.
When a Gigabit Ethernet model computer is used at a speed of 1000 Mbps, the Ethernet LAN connection fails or errors occur.	Connect the network cable to the Ethernet connector using Category 5 wiring and a 100 BASE-T hub/switch (not 100 BASE-X).
The Wake On LAN (WOL) feature does not work.	Enable the Wake On LAN feature in UEFI BIOS.
The Wi-Fi feature does not work.	• Enable the Wi-Fi feature in UEFI BIOS. • Enable all Wi-Fi devices. 1. Right-click the **Start** button to open the **Start** context menu. 2. Click **Device Manager**. Type the administrator password or provide confirmation, if prompted. 3. Expand **Network adapters** to display all network devices. 4. Right-click each Wi-Fi device, and then click **Enable device**. • Enable the Wi-Fi feature in Windows Settings. 1. Open the **Start** menu. 2. Click **Settings** → **Network & Internet** → **Wi-Fi**. 3. Enable the Wi-Fi feature. • Update or reinstall the Wi-Fi driver.

Problem	Solution
The Bluetooth feature does not work.	• Enable the Bluetooth feature in UEFI BIOS. • Enable all Bluetooth devices. 1. Right-click the **Start** button to open the **Start** context menu. 2. Click **Device Manager**. Type the administrator password or provide confirmation if prompted. 3. Expand **Bluetooth** to display all Bluetooth devices. Right-click each Bluetooth device, and then click **Enable device**. 4. Expand **Network adapters** to display all network devices. Right-click each Bluetooth device, and then click **Enable device**. • Turn on the Bluetooth radio. 1. Open the **Start** menu. 2. Click **Settings → Devices → Bluetooth & other devices**. 3. Turn on the **Bluetooth** switch to enable the Bluetooth feature. • Update or reinstall the Bluetooth driver.
Sound does not come from the Bluetooth headset or headphones.	Select the Bluetooth headset or headphones as the default audio output device in advanced sound settings.

Performance problems

Problem	Solution
Excessive fragmented files exist on the storage drives.	**Note:** Depending on the volume of the storage drives and amount of data stored on the storage drives, the disk-defragmentation process might take up to several hours. 1. Close any open programs and windows. 2. Open the **Start** menu. 3. Click **Windows System** → **File Explorer** → **This PC**. 4. Right-click your C drive and then click **Properties**. 5. Click the **Tools** tab. 6. Click **Optimize**. Select the drive as desired, and then click **Optimize**. 7. Follow the on-screen instructions.
The free storage drive space is insufficient.	• Clean out your Inbox, Sent Items, and Deleted Items folders from your e-mail application. • Clean up your C drive. 1. Open the **Start** menu. 2. Click **Windows System** → **File Explorer** → **This PC**. 3. Right-click your C drive and then click **Properties**. 4. Check the amount of free space, and then click **Disk Cleanup**. 5. A list of unnecessary file categories is displayed. Select the category you want to delete, and then click **OK**. • Disable some Windows features or remove some unnecessary programs. 1. Go to **Control Panel** and view by large icons or small icons. 2. Click **Programs and Features**. 3. Do one of the following: – To disable some Windows features, click **Turn Windows features on or off**. Follow the on-screen instructions. – To remove some unnecessary programs, select the program you want to remove, and then click **Uninstall/ Change** or **Uninstall**.
The free memory space is insufficient.	• Right-click a blank area on the taskbar and open Task Manager. Then, end some tasks you are not performing. • Install additional memory modules.

Storage drive problems

Problem	Solution
Some or all storage drives are missing from the BIOS menu.	• Ensure that the signal cables and power cables for all the storage drives are connected correctly. • Ensure that the computer is configured correctly to support the storage drives. – If the computer is installed with SATA storage drives, ensure that the SATA storage drive enablement module (one to five storage drives) is installed. – If the computer is installed with SAS storage drives, ensure that the SAS storage drive enablement module (one to five storage drives) or the LSI MegaRAID SAS adapter is installed.

CD or DVD problems

Problem	Solution
A CD or DVD does not work.	• Ensure that the optical drive supports the CD or DVD. • Ensure that the disc is inserted correctly, with its label up. • Ensure that the disc you are using is clean. To remove dust or fingerprints, wipe the disc clean with a soft cloth from the center to the outside. Wiping a disc in a circular motion might cause loss of data. • Ensure that the power cable and signal cable are securely connected to the drive. • Ensure that the disc you are using is not scratched or damaged. Try inserting another disc that you know works. • If you have multiple CD or DVD drives installed (or a combination of CD and DVD drives), try inserting the disc into the other drive. In some cases, only one of the drives is connected to the audio subsystem.
A bootable recovery medium, such as the Product Recovery CD, cannot be used to start your computer.	Ensure that the CD or DVD drive is set as the top priority of the boot priority order in UEFI BIOS. **Note:** On some computer models, the startup sequence is permanently set and cannot be changed.
A black screen is displayed instead of the DVD video.	• Restart the DVD player program. • Try a lower screen resolution or color depth. • Close any open files, and then restart the computer.
A DVD movie does not play.	• Ensure that the disc surface is clean and not scratched. • Check the disc or package for regional coding. You might need to purchase a disc with coding for the region where you are using the computer.
No audio or only an intermittent audio comes out while a DVD movie is playing.	• Check the volume control settings on the computer and on your speakers. • Ensure that the disc surface is clean and not scratched. • Check all cable connections to and from the speakers. • Use the DVD menu for the video to select a different audio track.

Problem	Solution
The playback is slow or choppy.	• Disable any background programs, such as AntiVirus or Desktop Themes. • Ensure that video resolution is less than 1152 x 864 pixels.
A message indicating invalid disc or no disc found is displayed.	• Ensure that the disc is in the drive with the shiny side of the disc facing down. • Ensure that video resolution is less than 1152 x 864 pixels. • Ensure that the DVD or CD is inserted into an appropriate optical drive. For example, do not insert a DVD into a CD-only drive.

Serial connector problems

Problem	Solution
The serial connector cannot be accessed.	• Connect the serial cable from the serial connector on the computer to the serial device. If the serial device has its own power cord, connect the power cord to a grounded electrical outlet. • Turn on the serial device and keep the device online. • Install any programs supplied with the serial device. Refer to the documentation that comes with the serial device for more information. • If you added one serial-connector adapter, ensure that the adapter is installed correctly.

Software problems

Problem	Solution
Some programs do not work as expected.	1. Check whether the problem is caused by a program. a. Ensure that the software is compatible with the computer. Refer to the information supplied with the software for more information. b. Verify that other software works correctly on the computer. c. Verify that the software you are using works on another computer. 2. If the problem is caused by a program: • Refer to the printed documentation that comes with the program or the help system of the program. • Update the program. • Uninstall the program and then reinstall it. To download a program that is preinstalled on your computer, go to https://pcsupport.lenovo.com and follow the on-screen instructions.

Recovery

This section introduces the recovery information of the Windows 10 operating system. Ensure that you read and follow the on-screen recovery instructions. The data on your computer might be deleted during the recovery process. To avoid data loss, make a backup copy of all the data that you want to keep.

Restore system files and settings to an earlier point

1. Go to **Control Panel** and view by large icons or small icons.
2. Click **Recovery → Open System Restore**. Then, follow the on-screen instructions.

Restore your files from a backup

Note: If you use the File History tool to restore your files from a backup, ensure that you backed up your data earlier with the tool.

1. Go to **Control Panel** and view by large icons or small icons.
2. Click **File History → Restore personal files**. Then, follow the on-screen instructions.

Reset your computer

In the resetting process, you can choose to keep your files or remove them when you reinstall the operating system.

Note: The items in the graphical user interface (GUI) might change without notice.

1. Open the **Start** menu, and then click **Settings → Update & Security → Recovery**.
2. In the **Reset this PC** section, click **Get started**.
3. Follow the on-screen instructions to reset your computer.

Use advanced options

1. Open the **Start** menu, and then click **Settings → Update & security → Recovery**.
2. In the **Advanced startup** section, click **Restart now → Troubleshoot → Advanced options**.
3. Select a preferred option, and then follow the on-screen instructions.

Windows automatic recovery

Note: Ensure that your computer is connected to ac power during the recovery process.

The Windows recovery environment on your computer operates independently from the Windows 10 operating system. It enables you to recover or repair the operating system even if the Windows 10 operating system fails to start.

After two consecutive failed boot attempts, the Windows recovery environment starts automatically. Then, you can choose repair and recovery options by following the on-screen instructions.

Create and use a recovery USB device

It is recommended that you create a recovery USB drive as early as possible as a backup for the Windows recovery programs. With the recovery USB drive, you can troubleshoot and fix the problems even if the preinstalled Windows recovery programs are damaged.

Create a recovery USB drive

Attention: The creation process deletes anything stored on the USB drive. To avoid data loss, make a backup copy of all the data that you want to keep.

1. Ensure that your computer is connected to ac power.
2. Prepare a USB drive with at least 16 GB of storage capacity. The actual USB capacity required depends on the size of the recovery image.
3. Connect the prepared USB drive to the computer.

4. Type recovery in the search box. Then, click **Create a recovery drive**.
5. Click **Yes** in the User Account Control window to allow the Recovery Media Creator program to start.
6. In the Recovery Drive window, follow the on-screen instructions to create a recovery USB drive.

Use the recovery USB drive

If you cannot start your computer, go to Chapter 6 “Help and support” on page 45 first to try to solve the problem by yourself. If you still cannot start your computer, use the recovery USB drive to recover your computer.

1. Ensure that your computer is connected to ac power.
2. Connect the recovery USB drive to the computer.
3. Turn on or restart the computer. When the logo screen is displayed, press F12. The Boot Menu window opens.
4. Select the recovery USB drive as the boot device.
5. Click **Troubleshoot** to display optional recovery solutions.
6. Select a recovery solution as desired. Then, follow the on-screen instructions to complete the process.

Update the device driver

Attention: Reinstalling device drivers will change the current configuration of the computer.

You should download the latest driver for a component when you notice poor performance from that component or when you added a component. This action might eliminate the driver as the potential cause of a problem. Download and install the latest driver by one of the following methods:

- From Lenovo Vantage:

  Open Lenovo Vantage to check the available update packages. If the latest UEFI BIOS update package is available, follow the on-screen instructions to download and install the package.
- From the Lenovo Support Web site:

  Go to https://pcsupport.lenovo.com and select the entry for your computer. Then, follow the on-screen instructions to download and install necessary drivers and software.
- From Windows Update:

  Note: The device drivers provided by Windows Update might not be tested by Lenovo. It is recommended that you get device drivers from Lenovo.

  1. Open the **Start** menu.
  2. Click **Settings → Update & Security → Windows Update**.
  3. Follow the on-screen instructions.

Chapter 5. CRU replacement

What are CRUs

Customer Replaceable Units (CRUs) are parts that can be upgraded or replaced by the customer. Lenovo computers contain the following types of CRUs:

- **Self-service CRUs:** Refer to parts that can be installed or replaced easily by customer themselves or by trained service technicians at an additional cost.
- **Optional-service CRUs:** Refer to parts that can be installed or replaced by customers with a greater skill level. Trained service technicians can also provide service to install or replace the parts under the type of warranty designated for the customer's machine.

If you intend on installing the CRU, Lenovo will ship the CRU to you. CRU information and replacement instructions are shipped with your product and are available from Lenovo at any time upon request. You might be required to return the defective part that is replaced by the CRU. When return is required: (1) return instructions, a prepaid shipping label, and a container will be included with the replacement CRU; and (2) you might be charged for the replacement CRU if Lenovo does not receive the defective CRU within thirty (30) days of your receipt of the replacement CRU. For full details, see the Lenovo Limited Warranty documentation at:
https://www.lenovo.com/warranty/llw_02

Refer to the following CRU list for your computer.

Self-service CRUs

- Keyboard*
- Mouse*
- Computer cover
- Front bezel
- M.2 solid-state drive
- Memory module
- Optical drive*
- PCI-Express card
- PCI-Express card holder
- Power cord
- Screw kit
- Storage drive
- Storage drive bracket
- Storage drive rubber

Optional-service CRUs

- Coin cell battery
- Heat sink assembly
- Power supply assembly

* for selected models

© Copyright Lenovo 2020

Replace a CRU

Follow the replacement procedure to replace a CRU.

Power cord

Prerequisite

Before you start, read Appendix A “Important safety information” on page 49 and print the following instructions.

Note: Do not remove the power cord when the computer is connected to ac power. Otherwise, there might be a risk of short circuits.

Replacement procedure

1. Turn off the computer and remove all connected peripheral devices and cables.
2. Remove the power cord.

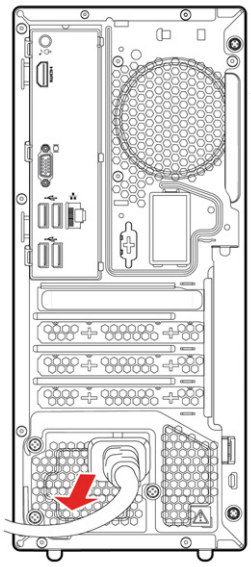

3. Connect the new power cord to the computer.

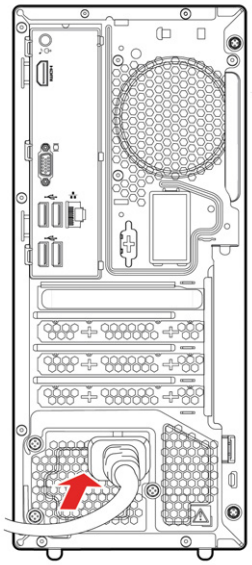

4. Reinstall all removed parts.
5. Place the computer in an upright position. Then, reconnect the power cord and all disconnected cables to the computer.

   Note: If a locking device is available, use it to lock the computer.

Computer cover

Prerequisite

Before you start, read Appendix A “Important safety information” on page 49 and print the following instructions.



Before you open the computer cover, turn off the computer and wait several minutes until the computer is cool.

Replacement procedure

1. Turn off the computer and remove all connected devices and cables.
2. Unlock any locking device that secures the computer cover.
3. Hold the sides of the computer and gently lay it down so that the computer cover is facing up.
4. Remove the screws and slide the computer cover out of the chassis.

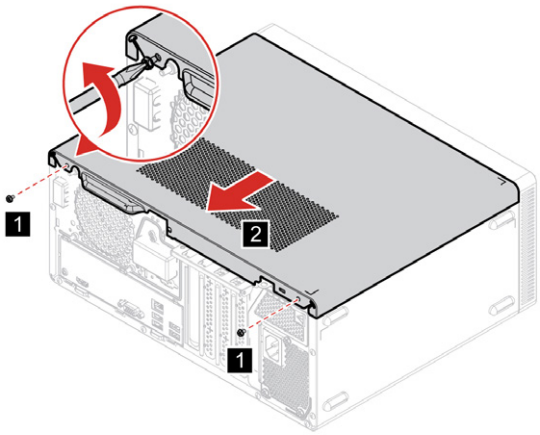

5. Install the new computer cover and secure the cover with the screws.

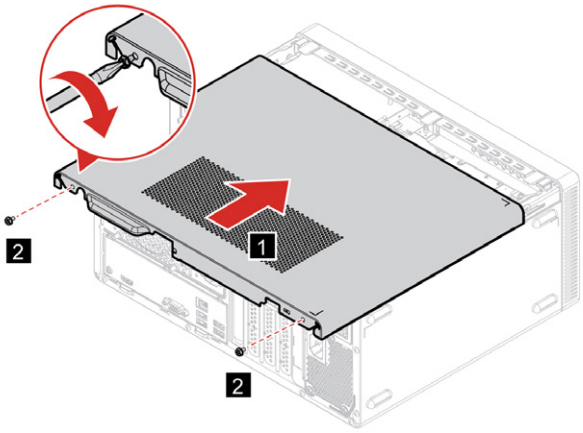

6. Place the computer in an upright position. Then, reconnect the power cord and all disconnected cables to the computer.

   Note: If a locking device is available, use it to lock the computer.

Front bezel

Prerequisite

Before you start, read Appendix A “Important safety information” on page 49 and print the following instructions.



Before you open the computer cover, turn off the computer and wait several minutes until the computer is cool.

Replacement procedure

1. Turn off the computer and remove all connected devices and cables.
2. Remove the computer cover. See “Computer cover” on page 25.
3. Remove the front bezel by releasing the three plastic tabs as shown.

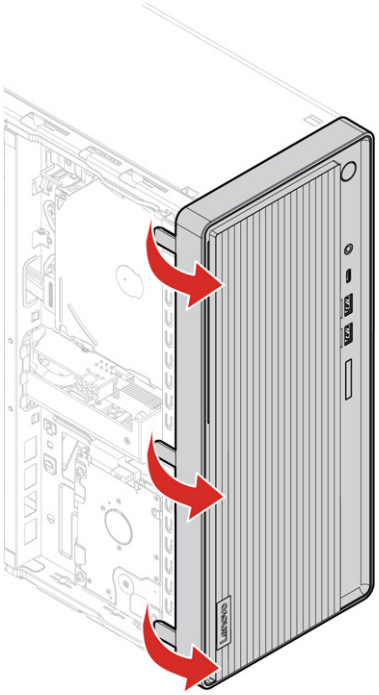

4. Install the front bezel by securing the three plastic tabs as shown.

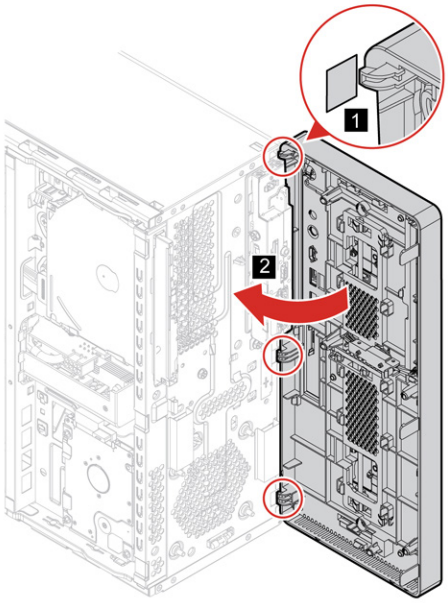

5. Reinstall all removed parts.
6. Place the computer in an upright position. Then, reconnect the power cord and all disconnected cables to the computer.

   Note: If a locking device is available, use it to lock the computer.

Storage drive

Prerequisite

Before you start, read Appendix A “Important safety information” on page 49 and print the following instructions.

Attention: The internal storage drive is sensitive. Inappropriate handling might cause damage and permanent loss of data. When handling the internal storage drive, observe the following guidelines:

- Replace the internal storage drive only for upgrade or repair. The internal storage drive is not designed for frequent changes or replacement.
- Before replacing the internal storage drive, make a backup copy of all the data that you want to keep.
- Do not touch the contact edge of the internal storage drive. Otherwise, the internal storage drive might get damaged.
- Do not apply pressure to the internal storage drive.
- Do not make the internal storage drive subject to physical shocks or vibration. Put the internal storage drive on a soft material, such as cloth, to absorb physical shocks.

Replacement procedure

1. Turn off the computer and remove all connected devices and cables.
2. Remove the computer cover. See “Computer cover” on page 25.
3. Remove the front bezel. See “Front bezel” on page 26 .
4. Remove the optical drive. See “Optical drive” on page 38.
5. Pivot the drive bay assembly upward.

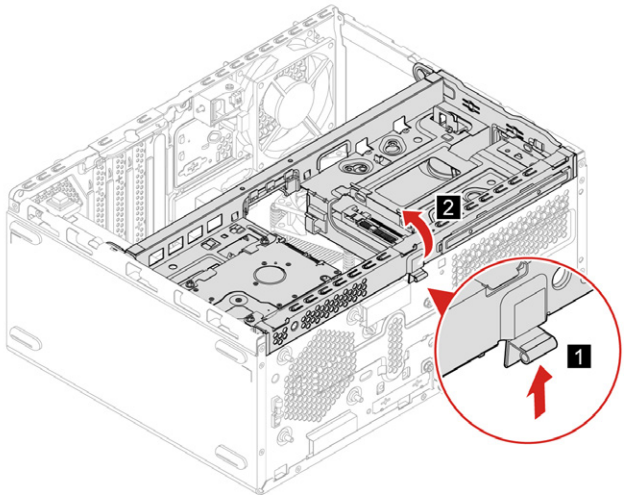

6. Disconnect the data cable and power cable from the storage drive.
7. Remove the screws, then remove the storage drive.

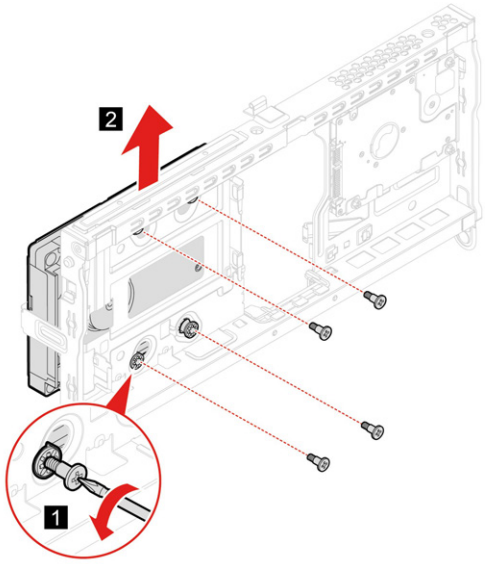

8. Install the storage drive and secure it with screws.

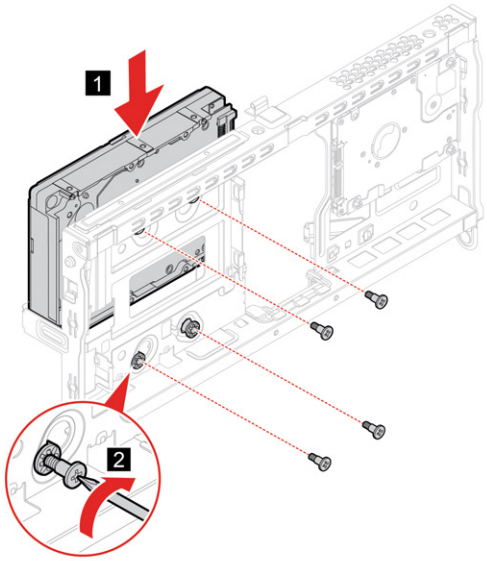

9. Pivot the drive bay assembly downward until it snaps into position.

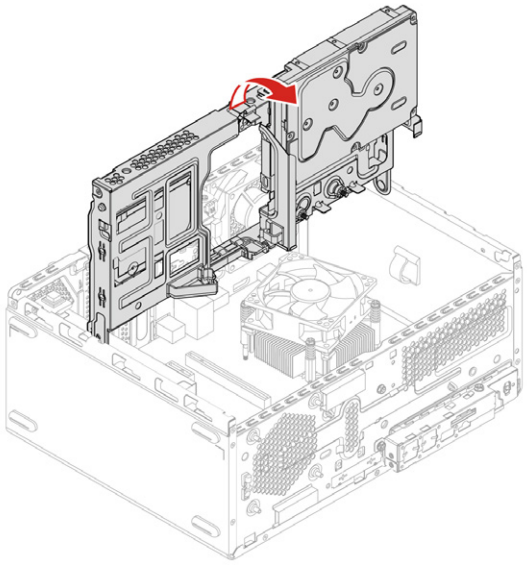

10. Reinstall all removed parts.
11. Place the computer in an upright position. Then, reconnect the data cable and power cable to the computer.

    Note: If a locking device is available, use it to lock the computer.

Storage drive bracket

Prerequisite

Before you start, read Appendix A “Important safety information” on page 49 and print the following instructions.

Replacement Procedure

1. Turn off the computer and remove all connected devices and cables.
2. Remove the computer cover. See “Computer cover” on page 25.
3. Remove the front bezel. See “Front bezel” on page 26.
4. Disconnect the data cables and power cables for optical drive and storage drive.
5. Remove the optical drive. See “Optical drive” on page 38
6. Remove the storage drive. See “Storage drive” on page 28
7. Pivot the drive bay assembly upward.

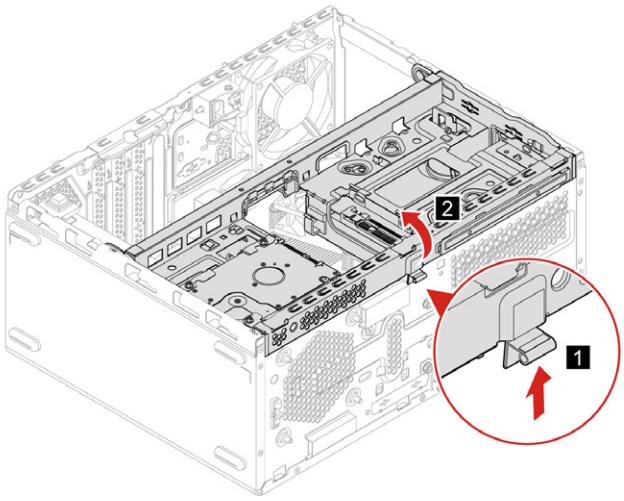

8. Remove the storage drive bracket.

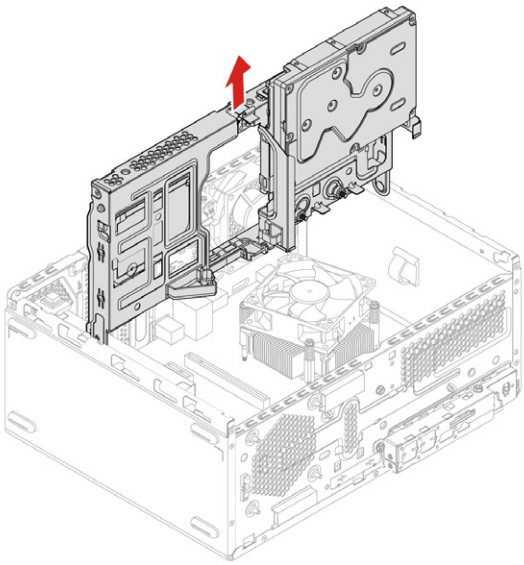

9. Install the new storage drive bracket and pivot the drive bay assemble downward.

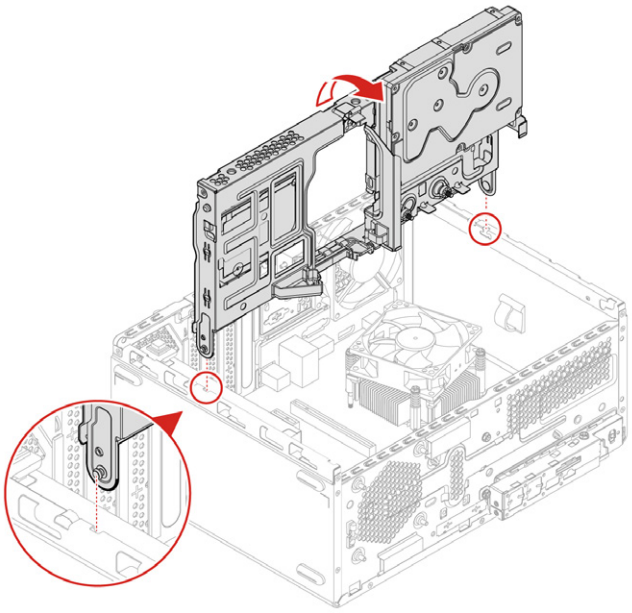

10. Reinstall all removed parts.
11. Place the computer in an upright position. Then, reconnect the power cord and all disconnected cables to the computer.

    Note: If a locking device is available, use it to lock the computer.

M.2 solid-state drive

Prerequisite

Before you start, read Appendix A “Important safety information” on page 49 and print the following instructions.

Attention: To replace the Optane memory in the M.2 solid-state drive slot, go to https://support.lenovo.com/docs/tg_ssd for details.

The following illustration shows the location of the M.2 solid-state drive on the system board.

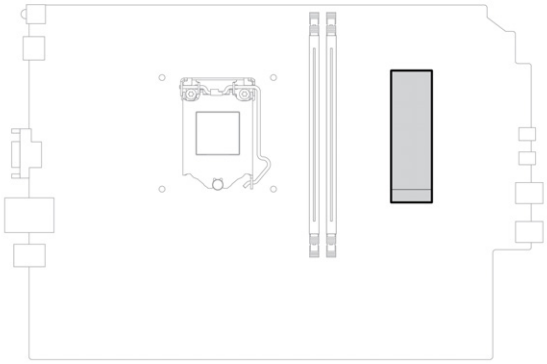

Replacement procedure

1. Turn off the computer and remove all connected devices and cables.
2. Remove the computer cover. See “Computer cover” on page 25.
3. Remove the front bezel. See “Front bezel” on page 26.
4. Remove the screw from M.2 solid-state drive.

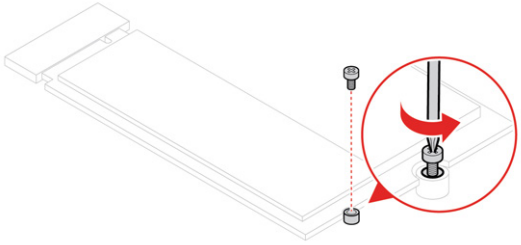

5. Slide the M.2 solid-state drive out.

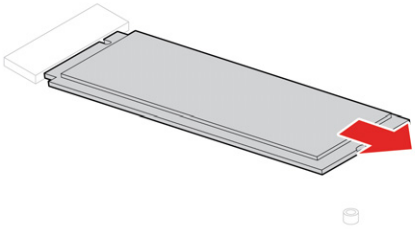

6. Install the M.2 solid-state drive in.

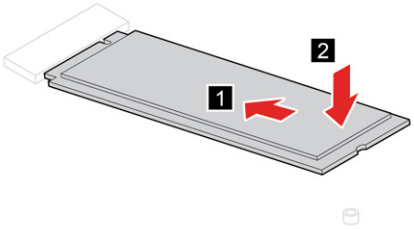

7. Secure the M.2 solid-state drive with the screw.

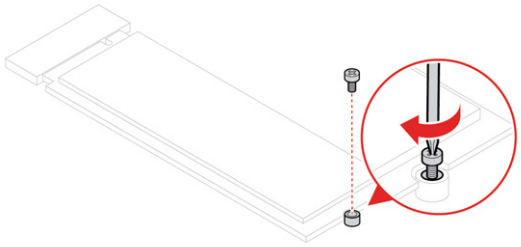

8. Reinstall all removed parts.
9. Place the computer in an upright position. Then, reconnect the power cord and all disconnected cables to the computer.

   Note: If a locking device is available, use it to lock the computer.

Power supply assembly

Prerequisite

Before you start, read Appendix A “Important safety information” on page 49 and print the following instructions.

Attention: Do not open your computer or attempt any repairs before reading the *Important Product Information Guide*.

Although there are no moving parts in your computer after the power cord has been disconnected, the following warnings are required for your safety and proper Underwriters Laboratories (UL) certification.

CAUTION:



Hazardous moving parts. Keep fingers and other body parts away.

CAUTION:
Never remove the cover on a power supply or any part that has the following label attached.



Hazardous voltage, current, and energy levels are present inside any component that has this label attached. There are no serviceable parts inside these components. If you suspect a problem with one of these parts, contact a service technician.

Replacement procedure

1. Turn off the computer and remove all connected devices and cables.
2. Remove the computer cover. See “Computer cover” on page 25.
3. Remove the front bezel. See “Front bezel” on page 26.
4. Remove the storage drive bracket. See “Storage drive bracket” on page 30.
5. Disconnect the power supply cables from the system board.
6. Remove the screws then, press the lock button and slide the power supply assembly out of the computer.

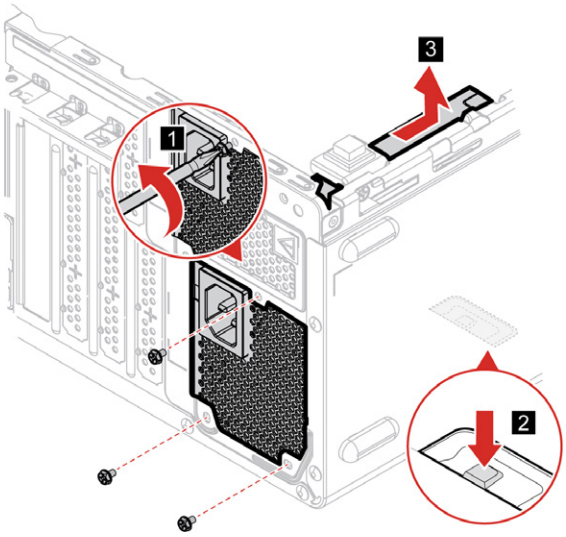

7. Connect the new power supply assembly cables to the system board.
8. Install the power supply assembly and then, install the screws.

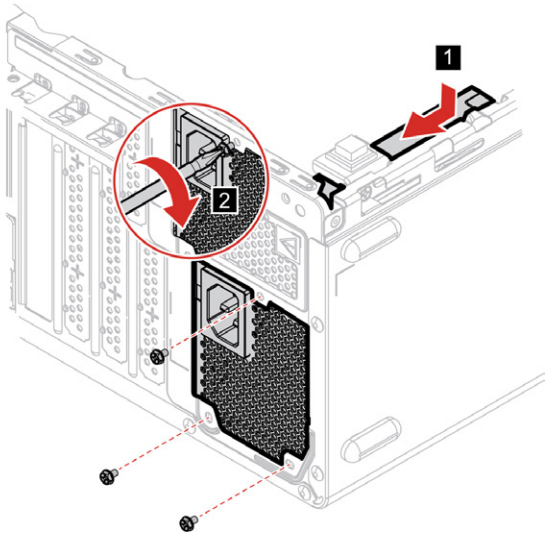

9. Reinstall all removed parts.
10. Place the computer in an upright position. Then, reconnect the power cord and all disconnected cables to the computer.

    Note: If a locking device is available, use it to lock the computer.

Coin-cell battery

Prerequisite

Before you start, read Appendix A “Important safety information” on page 49 and print the following instructions.

Attention: Do not open your computer or attempt any repairs before reading the *Important Product Information Guide*.

DANGER

If the coin-cell battery is incorrectly replaced, there is danger of an explosion. The coin-cell battery contains a small amount of harmful substance. To avoid possible injury:

- **Replace only with a battery of the type recommended by Lenovo.**
- **Keep the battery away from fire.**
- **Do not expose it to excessive heat.**
- **Do not expose it to water or rain.**
- **Do not short-circuit it.**
- **Do not drop, crush, puncture the battery, or make it subject to strong forces. Battery abuse or mishandling can cause the battery to overheat, which can cause gasses or flame to "vent" from the battery or coin-cell battery.**

Note: To dispose of the coin-cell battery, refer to “Lithium coin-cell battery notice” in the *Safety and Warranty Guide*.

Your computer has a special type of memory that maintains the date, time, and settings for built-in features, such as parallel connector assignments (configurations). A coin-cell battery keeps this information active when you turn off the computer.

The coin-cell battery normally requires no charging or maintenance throughout its life; however, no coin-cell battery lasts forever. If the coin-cell battery fails, the date, time, and configuration information (including passwords) is lost. An error message is displayed when you turn on the computer.

Replacement procedure

1. Turn off the computer and remove all connected devices and cables.
2. Remove the computer cover. See “Computer cover” on page 25.
3. Disengage the latch.

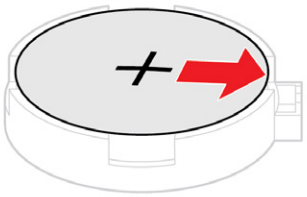

4. Remove the coin-cell battery.

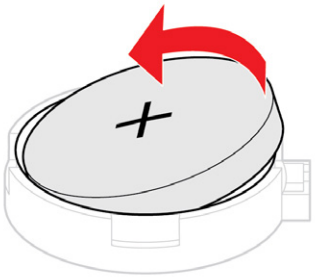

5. Install the coin-cell battery.

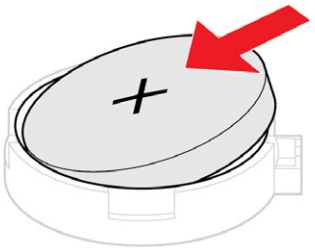

6. Secure the coin-cell battery with the latch.

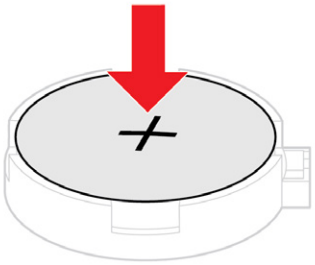

7. Reinstall all removed parts.
8. Place the computer in an upright position. Then, reconnect the power cord and all disconnected cables to the computer.

   Note: If a locking device is available, use it to lock the computer.

Optical drive

Prerequisite

Before you start, read Appendix A “Important safety information” on page 49 and print the following instructions.

Replacement procedure

1. Remove the computer cover. See “Computer cover” on page 25.
2. Remove the front bezel. See “Front bezel” on page 26.
3. Disconnect the data cable and power cable from the rear of the optical drive.
4. Press the release button and push the optical drive straight out of the front of the chassis.

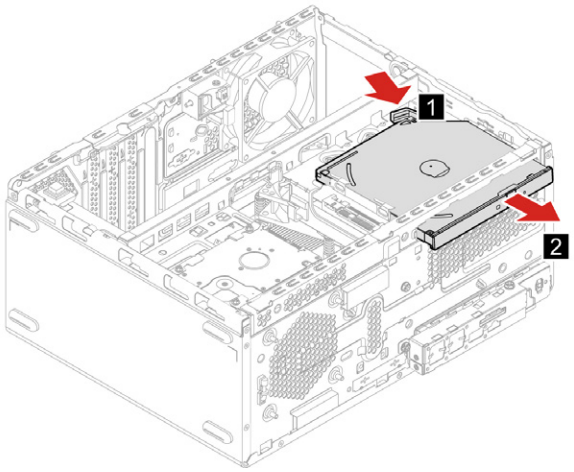

5. Detach the optical drive bracket from the optical drive.

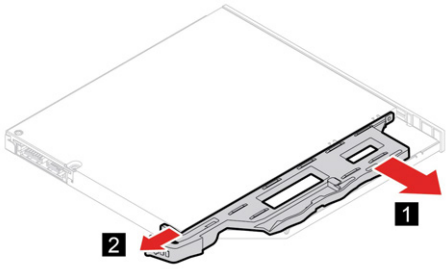

6. Install the optical drive bracket on the optical drive.

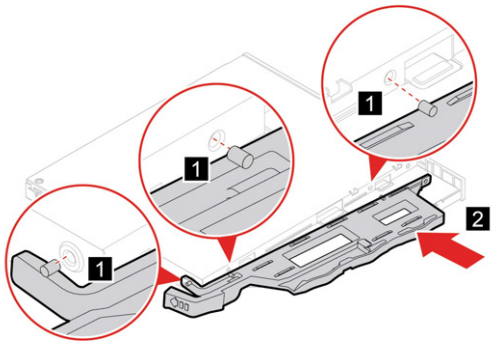

7. Install the optical drive and reconnect the cables.

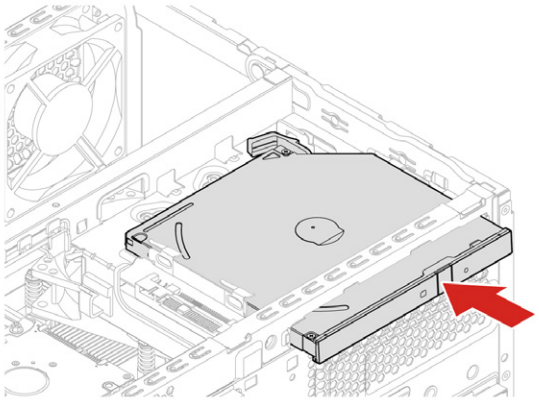

8. Reinstall all the removed parts.
9. Reconnect the power cord and all disconnected cables to the computer.

   Note: If a locking device is available, use it to lock the computer.

Heat sink assembly

Prerequisite

Before you start, read Appendix A “Important safety information” on page 49 and print the following instructions.



The heat sink might be very hot. Before you open the computer cover, turn off the computer and wait several minutes until the computer is cool.

Replacement procedure

1. Turn off the computer and remove all connected devices and cables.
2. Remove the computer cover. See “Computer cover” on page 25.
3. Remove the front bezel. See “Front bezel” on page 26.
4. Remove the storage drive bracket. See “Storage drive bracket” on page 30.
5. Remove the screws. Then, remove the heat sink.

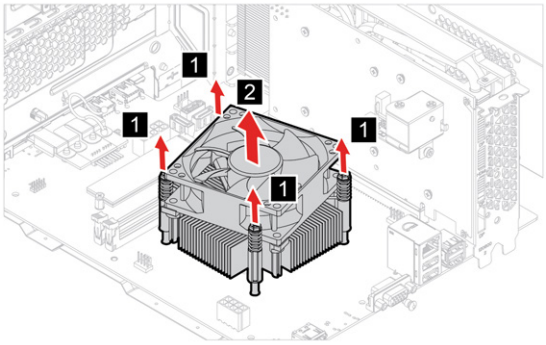

6. Install the heat sink and secure it with screws.

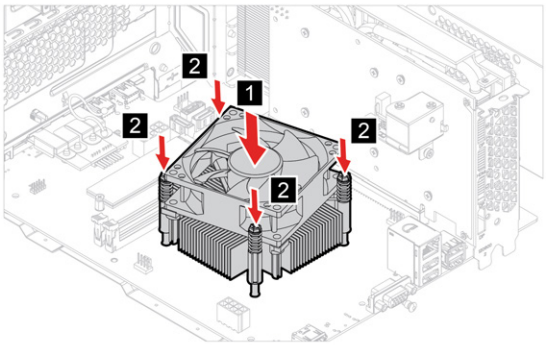

7. Reinstall all removed parts.
8. Place the computer in an upright position. Then, reconnect the power cord and all disconnected cables to the computer.

   Note: If a locking device is available, use it to lock the computer.

PCI-Express card

Prerequisite

Before you start, read Appendix A “Important safety information” on page 49 and print the following instructions.

Replacement procedure

1. Turn off the computer and remove all connected devices and cables.
2. Remove the computer cover. See “Computer cover” on page 25.
3. Remove the front bezel. See “Front bezel” on page 26.
4. Remove the storage drive bracket. See “Storage drive bracket” on page 30.
5. Pivot the card retaining latch and the card latch to remove the PCI-Express card.

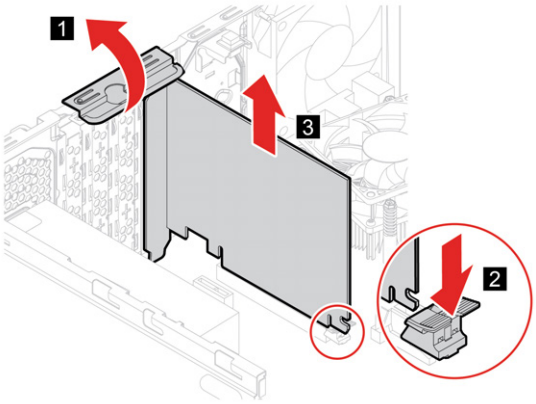

6. Install the PCI-Express card then, secure it by closing the card latch.

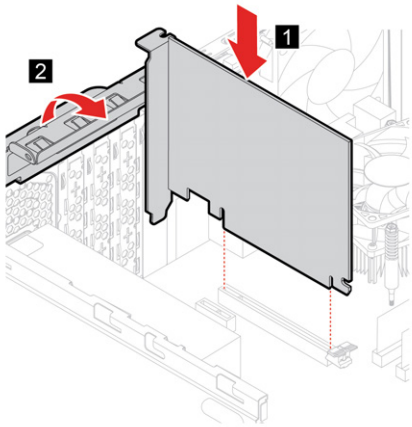

7. Reinstall all removed parts.
8. Reconnect all disconnected cables to the computer and reconnect the power cord to the electrical outlet.

   Note: If a locking device is available, use it to lock the computer.

Memory module

Prerequisite

Before you start, read Appendix A “Important safety information” on page 49 and print the following instructions.

Ensure that you follow the installation order for memory modules as shown in the following illustration.

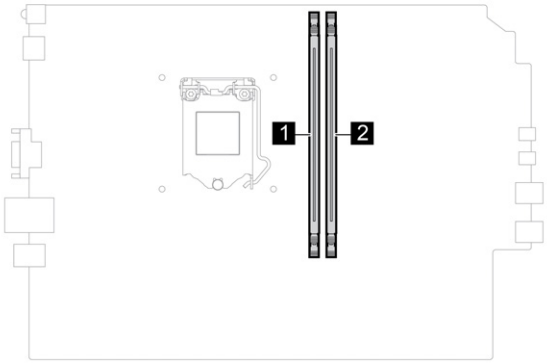

Attention: Do not touch the contact edge of the memory module. Otherwise, the memory module might get damaged.

Replacement procedure

1. Turn off the computer and remove all connected devices and cables.
2. Remove the computer cover. See “Computer cover” on page 25.
3. Remove the front bezel. See “Front bezel” on page 26.
4. Disengage the latches and remove the memory module.

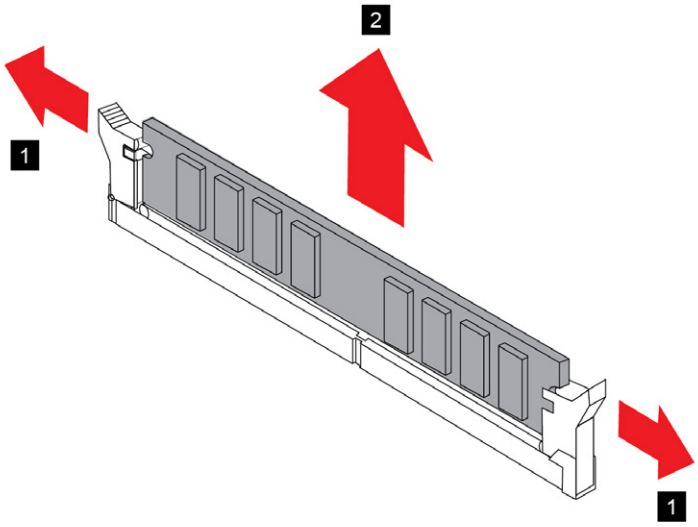

5. Install a memory module and secure the memory module with the latches.

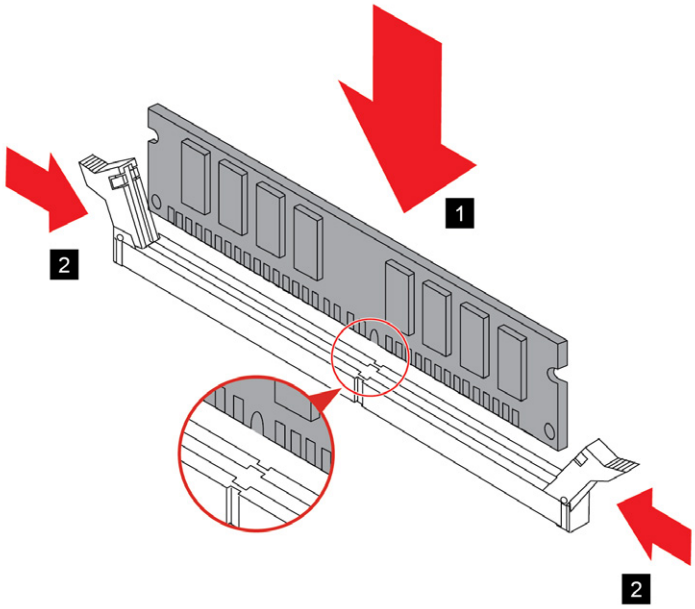

6. Reinstall all removed parts.
7. Reconnect all disconnected cables to the computer and reconnect the power cord to the electrical outlet.

   Note: If a locking device is available, use it to lock the computer.

Chapter 6. Help and support

Self-help resources

Use the following self-help resources to learn more about the computer and troubleshoot problems.

Resources	How to access?
Use Lenovo Vantage to: • Configure device settings. • Download and install UEFI BIOS, drivers and firmware updates. • Secure you computer from outside threats. • Check the computer warranty status. • Access *User Guide* and helpful articles.	• Open the **Start** menu and click **Lenovo Vantage**. • Use Windows Search.
Product documentation: • *Safety and Warranty Guide* • *Setup Guide* • This *User Guide* • *Regulatory Notice*	1. Go to https://pcsupport.lenovo.com. 2. Detect your computer or select computer model manually. 3. Select **Documentation** and filter out the documentation you want.
Lenovo Support Web site with the latest support information of the following: • Drivers and software • Diagnostic solutions • Product and service warranty • Product and parts details • Knowledge base and frequently asked questions	https://pcsupport.lenovo.com
Windows help information	• Open the **Start** menu and click **Get Help** or **Tips**. • Use Windows Search or the Cortana® personal assistant. • Microsoft support Web site: https://support.microsoft.com

© Copyright Lenovo 2020

Call Lenovo

If you have tried to correct the problem yourself and still need help, you can call Lenovo Customer Support Center.

Before you contact Lenovo

Prepare the following before you contact Lenovo:

1. Record the problem symptoms and details:
   - What is the problem? Is it continuous or intermittent?
   - Any error message or error code?
   - What operating system are you using? Which version?
   - Which software applications were running at the time of the problem?
   - Can the problem be reproduced? If so, how?
2. Record the system information:
   - Product name
   - Machine type and serial number

     The following illustration shows where to find the machine type and serial number of your computer.



Lenovo Customer Support Center

During the warranty period, you can call Lenovo Customer Support Center for help.

Telephone numbers

For a list of the Lenovo Support phone numbers for your country or region, go to: https://pcsupport.lenovo.com/supportphonelist

Note: Phone numbers are subject to change without notice. If the number for your country or region is not provided, contact your Lenovo reseller or Lenovo marketing representative.

Services available during the warranty period

- Problem determination - Trained personnel are available to assist you with determining if you have a hardware problem and deciding what action is necessary to fix the problem.
- Lenovo hardware repair - If the problem is determined to be caused by Lenovo hardware under warranty, trained service personnel are available to provide the applicable level of service.

- Engineering change management - Occasionally, there might be changes that are required after a product has been sold. Lenovo or your reseller, if authorized by Lenovo, will make selected Engineering Changes (ECs) that apply to your hardware available.

Services not covered

- Replacement or use of parts not manufactured for or by Lenovo or nonwarranted parts
- Identification of software problem sources
- Configuration of UEFI BIOS as part of an installation or upgrade
- Changes, modifications, or upgrades to device drivers
- Installation and maintenance of network operating systems (NOS)
- Installation and maintenance of programs

For the terms and conditions of the Lenovo Limited Warranty that apply to your Lenovo hardware product, see “Warranty information” in the *Safety and Warranty Guide* that comes with your computer.

Purchase additional services

During and after the warranty period, you can purchase additional services from Lenovo at: https://www.lenovo.com/services

Service availability and service name might vary by country or region.

Appendix A. Important safety information

Safety notices

This information can help you safely use your computer. Follow and retain all information included with your computer. The information in this document does not alter the terms of your purchase agreement or the Limited Warranty. For more information, see "Warranty Information" in the *Safety and Warranty Guide* that comes with your computer.

Customer safety is important. Our products are developed to be safe and effective. However, personal computers are electronic devices. Power cords, power adapters, and other features can create potential safety risks that can result in physical injury or property damage, especially if misused. To reduce these risks, follow the instructions included with your product, observe all warnings on the product and in the operating instructions, and review the information included in this document carefully. By carefully following the information contained in this document and provided with your product, you can help protect yourself from hazards and create a safer computer work environment. If the computer is used in a manner not specified by the manufacturer, the protection provided by the computer may be impaired.

Note: This information includes references to power adapters and batteries. In addition, some products (such as speakers and monitors) ship with external power adapters. If you have such a product, this information applies to your product. In addition, computer products contain a coin-sized internal battery that provides power to the system clock even when the computer is unplugged, so the battery safety information applies to all computer products.

Conditions that require immediate action

Products can become damaged due to misuse or neglect. Some product damage is serious enough that the product should not be used again until it has been inspected and, if necessary, repaired by an authorized servicer.

As with any electronic device, pay close attention to the product when it is turned on.

On very rare occasions, you might notice an odor or see a puff of smoke or sparks vent from your product. You might also hear sounds like popping, cracking, or hissing. These might merely mean that an internal electronic component has failed in a safe and controlled manner. Or, they might indicate a potential safety issue. Do not take risks or attempt to diagnose the situation yourself. Contact the Customer Support Center for further guidance. For a list of Service and Support phone numbers, see the following Web site:

https://pcsupport.lenovo.com/supportphonelist

Frequently inspect your computer and its components for damage, wear, or signs of danger. If you have any question about the condition of a component, do not use the product. Contact the Customer Support Center or the product manufacturer for instructions on how to inspect the product and have it repaired, if necessary.

In the unlikely event that you notice any of the following conditions, or if you have any safety concerns with your product, stop using the product and unplug it from the power source and telecommunication lines until you can speak to the Customer Support Center for further guidance.

- Power cords, plugs, power adapters, extension cords, surge protectors, or power supplies that are cracked, broken, or damaged.

© Copyright Lenovo 2020

- Signs of overheating, smoke, sparks, or fire.
- Damage to a battery (such as cracks, dents, or creases), discharge from a battery, or a buildup of foreign substances on the battery.
- A cracking, hissing, or popping sound, or strong odor that comes from the product.
- Signs that liquid has been spilled or an object has fallen onto the computer product, the power cord, or power adapter.
- The computer product, power cord, or power adapter has been exposed to water.
- The product has been dropped or damaged in any way.
- The product does not operate normally when you follow the operating instructions.

Note: If you notice these conditions with a product (such as an extension cord) that is not manufactured for or by Lenovo, stop using that product until you can contact the product manufacturer for further instructions, or until you get a suitable replacement.

Service and upgrades

Do not attempt to service a product yourself unless instructed to do so by the Customer Support Center or your documentation. Only use a Service Provider who is approved to repair your particular product.

Note: Some computer parts can be upgraded or replaced by the customer. Upgrades typically are referred to as options. Replacement parts approved for customer installation are referred to as Customer Replaceable Units, or CRUs. Lenovo provides documentation with instructions when it is appropriate for customers to install options or replace CRUs. You must closely follow all instructions when installing or replacing parts. The Off state of a power indicator does not necessarily mean that voltage levels inside a product are zero. Before you remove the covers from a product equipped with a power cord, always ensure that the power is turned off and that the product is unplugged from any power source. If you have any questions or concerns, contact the Customer Support Center.

Although there are no moving parts in the computer after the power cord has been disconnected, the following warnings are required for your safety.



Moving Parts:

Keep fingers and other parts of your body away from hazardous, moving parts. If you suffer an injury, seek medical care immediately.



Hot Surface:

Avoid contact with hot components inside the computer. During operation, some components become hot enough to burn the skin. Before you open the computer cover, turn off the computer, disconnect power, and wait approximately 10 minutes for the components to cool.



After replacing a CRU, reinstall all protective covers, including the computer cover, before connecting power and operating the computer. This action is important to help prevent unexpected electrical shock and help ensure the containment of an unexpected fire that could happen under extremely rare conditions.



Sharp Edges:

When replacing CRUs, be cautious of sharp edges or corners that might cause injury. If you suffer an injury, seek medical care immediately.

Power cords and power adapters



DANGER

Use only the power cords and power adapters supplied by the product manufacturer.

The power cords shall be safety approved. For Germany, it shall be H03VV-F, 3G, 0.75 mm^2, or better. For other countries, the suitable types shall be used accordingly.

Never wrap a power cord around a power adapter or other object. Doing so can stress the cord in ways that can cause the cord to fray, crack, or crimp. This can present a safety hazard.

Always route power cords so that they will not be walked on, tripped over, or pinched by objects.

Protect power cords and power adapters from liquids. For instance, do not leave your power cord or power adapter near sinks, tubs, toilets, or on floors that are cleaned with liquid cleansers. Liquids can cause a short circuit, particularly if the power cord or power adapter has been stressed by misuse. Liquids also can cause gradual corrosion of power cord terminals and/or the connector terminals on a power adapter, which can eventually result in overheating.

Ensure that all power cord connectors are securely and completely plugged into receptacles.

Do not use any power adapter that shows corrosion at the ac input pins or shows signs of overheating (such as deformed plastic) at the ac input pins or anywhere on the power adapter.

Do not use any power cords where the electrical contacts on either end show signs of corrosion or overheating or where the power cord appears to have been damaged in any way.

To prevent possible overheating, do not cover the power adapter with clothing or other objects when the power adapter is plugged into an electrical outlet.

Power cord notice

Note: The power cord and adapter provided with this product are intended to be used with this product only. Do not use them with any other products.

For your safety, Lenovo provides a power cord with a grounded attachment plug to use with this product. To avoid electrical shock, always use the power cord and plug with a properly grounded outlet.

Power cords provided by Lenovo in the United States and Canada are listed by Underwriter's Laboratories (UL) and certified by the Canadian Standards Association (CSA).

For units intended to be operated at 115 volts: Use a UL-listed and CSA-certified cord set consisting of a minimum 18 AWG, Type SVT or SJT, three-conductor cord, a maximum of 15 feet in length and a parallel blade, grounding-type attachment plug rated 10 amperes, 125 volts.

For units intended to be operated at 230 volts (U.S. use): Use a UL-listed and CSA-certified cord set consisting of a minimum 18 AWG, Type SVT or SJT, three-conductor cord, a maximum of 15 feet in length and a tandem blade, grounding-type attachment plug rated 10 amperes, 250 volts.

For units intended to be operated at 230 volts (outside the U.S.): Use a cord set with a grounding-type attachment plug. The cord set should have the appropriate safety approvals for the country in which the equipment will be installed.

Power cords provided by Lenovo for a specific country or region are usually available only in that country or region.

For units intended to be operated in Germany: The power cords must be safety approved. For Germany, it must be H05VV-F, 3G, 0.75 mm2, or better. For other countries, the suitable types must be used accordingly.

For units intended to be operated in Denmark: Use a cord set with a grounding-type attachment plug. The cord set should have the appropriate safety approvals for the country in which the equipment will be installed.

For units intended to be operated in Norway, Sweden, Finland: Use a cord set with a two-prong attachment plug. The cord set should have the appropriate safety approvals for the country in which the equipment will be installed.

If you intend to use your PC in a country or region that is different from your ordering location, please purchase an additional Lenovo power cord for the country or region where the PC will be used. Refer to the power cord guide provided in our Web site, https://pcsupport.lenovo.com, for details. Some countries and regions support multiple voltages, so make sure you order the appropriate power cord for the intended voltage.

Extension cords and related devices

Ensure that extension cords, surge protectors, uninterruptible power supplies, and power strips that you use are rated to handle the electrical requirements of the product. Never overload these devices. If power strips are used, the load should not exceed the power strip input rating. Consult an electrician for more information if you have questions about power loads, power requirements, and input ratings.

Plugs and outlets

DANGER

If a receptacle (power outlet) that you intend to use with your computer equipment appears to be damaged or corroded, do not use the outlet until it is replaced by a qualified electrician.

Do not bend or modify the plug. If the plug is damaged, contact the manufacturer to obtain a replacement.

Do not share an electrical outlet with other home or commercial appliances that draw large amounts of electricity; otherwise, unstable voltage might damage your computer, data, or attached devices.

Some products are equipped with a three-pronged plug. This plug fits only into a grounded electrical outlet. This is a safety feature. Do not defeat this safety feature by trying to insert it into a non-grounded outlet. If you cannot insert the plug into the outlet, contact an electrician for an approved outlet adapter or to replace the outlet with one that enables this safety feature. Never overload an electrical outlet. The overall system load should not exceed 80 percent of the branch circuit rating. Consult an electrician for more information if you have questions about power loads and branch circuit ratings.

Be sure that the power outlet you are using is properly wired, easily accessible, and located close to the equipment. Do not fully extend power cords in a way that will stress the cords.

Be sure that the power outlet provides the correct voltage and current for the product you are installing.

Carefully connect and disconnect the equipment from the electrical outlet.

Power supply statement

Never remove the cover on a power supply or any part that has the following label attached.



Hazardous voltage, current, and energy levels are present inside any component that has this label attached. There are no serviceable parts inside these components. If you suspect a problem with one of these parts, contact a service technician.

External devices

CAUTION:
Do not connect or disconnect any external device cables other than Universal Serial Bus (USB) and 1394 cables while the computer power is on; otherwise, you might damage your computer. To avoid possible damage to attached devices, wait at least five seconds after the computer is shut down to disconnect external devices.

Lithium coin-cell battery notice

DANGER

Danger of explosion if battery is incorrectly replaced.

If the coin-cell battery is not a CRU, do not attempt to replace the coin-cell battery. Replacement of the battery must be done by a Lenovo-authorized repair facility or technician.

The Lenovo-authorized repair facilities or technicians recycle Lenovo batteries according to local laws and regulations.

When replacing the lithium coin-cell battery, use only the same type or equivalent type that is recommended by the manufacturer. The battery contains lithium and can explode if not properly used, handled, or disposed of. Swallowing the lithium coin-cell battery will cause chocking or severe internal burns in just two hours and might even result in death.

Keep batteries away from children. If the lithium coin-cell battery is swallowed or placed inside any part of the body, seek medical care immediately.

Do not:

- Throw or immerse into water
- Heat to more than 100 °C (212°F)
- Repair or disassemble
- Leave in an extremely low air pressure environment
- Leave in an extremely high-temperature environment
- Crush, puncture, cut, or incinerate

Dispose of the battery as required by local ordinances or regulations.

The following statement applies to users in the state of California, U.S.A.

California Perchlorate Information:

Products containing manganese dioxide lithium coin-cell batteries may contain perchlorate.

Perchlorate Material - special handling may apply, see https://www.dtsc.ca.gov/hazardouswaste/perchlorate/.

Heat and product ventilation

Computers, power adapters, and many accessories can generate heat when turned on and when batteries are charging. Always follow these basic precautions:

- Do not leave your computer, power adapter, or accessories in contact with your lap or any part of your body for an extended period when the products are functioning or when the battery is charging. Your

computer, power adapter, and many accessories produce some heat during normal operation. Extended contact with the body could cause discomfort or, potentially, a skin burn.

- Do not charge the battery or operate your computer, power adapter, or accessories near flammable materials or in explosive environments.
- Ventilation slots, fans, and heat sinks are provided with the product for safety, comfort, and reliable operation. These features might inadvertently become blocked by placing the product on a bed, sofa, carpet, or other flexible surface. Never block, cover, or disable these features.

Inspect your desktop computer for dust accumulation at least once every three months. Before inspecting your computer, turn off the power and unplug the computer's power cord from the electrical outlet; then remove any dust from vents and perforations in the bezel. If you notice external dust accumulation, then examine and remove dust from the inside of the computer including heat sink inlet fins, power supply vents, and fans. Always turn off and unplug the computer before opening the cover. If possible, avoid operating your computer within two feet of high-traffic areas. If you must operate your computer in or near a high-traffic area, inspect and, if necessary, clean your computer more frequently.

For your safety and to maintain optimum computer performance, always follow these basic precautions with your desktop computer:

- Keep the cover closed whenever the computer is plugged in.
- Regularly inspect the outside of the computer for dust accumulation.
- Remove dust from vents and any perforations in the bezel. More frequent cleanings might be required for computers in dusty or high-traffic areas.
- Do not restrict or block any ventilation openings.
- Do not store or operate your computer inside furniture, as this might increase the risk of overheating.
- Airflow temperatures into the computer should not exceed 35°C (95°F).
- Do not install air filtration devices. They may interfere with proper cooling.

Electrical current safety information



DANGER

Electric current from power, telephone, and communication cables is hazardous.

To avoid a shock hazard:

- **Do not use your computer during a lightning storm.**
- **Do not connect or disconnect any cables or perform installation, maintenance, or reconfiguration of this product during an electrical storm.**
- **Connect all power cords to a properly wired and grounded electrical outlet.**
- **Connect properly wired outlets to any equipment that will be attached to this product.**
- **Whenever possible, use one hand only to connect or disconnect signal cables.**
- **Never turn on any equipment when there is evidence of fire, water, or structural damage.**
- **Disconnect the attached power cords, battery, and all the cables before you open the device covers, unless instructed otherwise in the installation and configuration procedures.**
- **Do not use your computer until all internal parts enclosures are fastened into place. Never use the computer when internal parts and circuits are exposed.**

DANGER

Connect and disconnect cables as described in the following procedures when installing, moving, or opening covers on this product or attached devices.

To connect:

1. **Turn everything OFF.**
2. **First, attach all cables to devices.**
3. **Attach signal cables to connectors.**
4. **Attach power cords to outlets.**
5. **Turn devices ON.**

To disconnect:

1. **Turn everything OFF.**
2. **First, remove power cords from outlets.**
3. **Remove signal cables from connectors.**
4. **Remove all cables from devices.**

The power cord must be disconnected from the wall outlet or receptacle before installing all other electrical cables connected to the computer.

The power cord may be reconnected to the wall outlet or receptacle only after all other electrical cables have been connected to the computer.

DANGER

During electrical storms, do not perform any replacement and do not connect the telephone cable to or disconnect it from the telephone outlet on the wall.

Laser safety information

CAUTION:
When laser products (such as CD-ROMs, DVD drives, fiber optic devices, or transmitters) are installed, note the following:

- **Do not remove the covers. Removing the covers of the laser product could result in exposure to hazardous laser radiation. There are no serviceable parts inside the device.**
- **Use of controls or adjustments or performance of procedures other than those specified herein might result in hazardous radiation exposure.**

DANGER

Some laser products contain an embedded Class 3B laser diode. Note the following:
Laser radiation when open. Do not stare into the beam, do not view directly with optical instruments, and avoid direct exposure to the beam.

Liquid crystal display (LCD) notice

DANGER

To avoid shock hazards:

- **Do not remove the covers.**
- **Do not operate this product unless the stand is attached.**
- **Do not connect or disconnect this product during an electrical storm.**
- **The power cord plug must be connected to a properly wired and grounded power outlet.**
- **Any equipment to which this product will be attached must also be connected to properly wired and grounded power outlets.**
- **To isolate the monitor from the electrical supply, you must remove the plug from the power outlet. The power outlet should be easily accessible.**

Handling:

- If your monitor weighs more than 18 kg (39.68 lb), we recommend that it be moved or lifted by two people.

Product disposal (TFT monitors):

- The fluorescent lamp in the liquid crystal display contains mercury; dispose according to local, state, or federal laws.

Battery warnings:

- Risk of explosion if battery is replaced by an incorrect type.
- Dispose of used batteries according to the instructions.

Use earphones, headphones, or a headset

- If your computer has both a headphone connector and an audio line-out connector, always use the headphone connector for earphones, headphones, or a headset. However, the headphone connector does not support the microphone of the headset.
- If your computer has both a headset connector and an audio line-out connector, always use the headset connector for earphones, headphones, or a headset.



Excessive sound pressure from earphones and headphones can cause hearing loss. Adjustment of the equalizer to maximum increases the earphone and headphone output voltage and the sound pressure level. Therefore, to protect your hearing, adjust the equalizer to an appropriate level.

Excessive use of headphones or earphones for a long period of time at high volume can be dangerous if the output of the headphone or earphone connectors do not comply with specifications of EN 50332-2. The headphone output connector of your computer complies with EN 50332-2 Sub clause 7. This specification limits the computer's maximum wide band true RMS output voltage to 150 mV. To help protect against hearing loss, ensure that the headphones or earphones you use also comply with EN 50332-2 (Clause 7

Limits) or a wide band characteristic voltage of 75 mV. Using headphones that do not comply with EN 50332-2 can be dangerous due to excessive sound pressure levels.

If your Lenovo computer came with headphones or earphones in the package, as a set, the combination of the headphones or earphones and the computer already complies with the specifications of EN 50332-1. If different headphones or earphones are used, ensure that they comply with EN 50332-1 (Clause 6.5 Limitation Values). Using headphones that do not comply with EN 50332-1 can be dangerous due to excessive sound pressure levels.

Choking hazard notice



CHOKING HAZARD – Product contains small parts.

Keep away from children under three years.

Plastic bag notice

DANGER

Plastic bags can be dangerous. Keep plastic bags away from babies and children to avoid danger of suffocation.

Glass parts notice

CAUTION:
Some parts of your product may be made of glass. This glass could break if the product is dropped on a hard surface or receives a substantial impact. If glass breaks, do not touch or attempt to remove it. Stop using your product until the glass is replaced by trained service personnel.

Computer placement notices

Inappropriate computer placement might cause harm to children.

- Place the computer on a sturdy piece of low-rise furniture or furniture that has been anchored.
- Do not place the computer at the edge of the furniture.
- Keep the computer cables out of the reach of children.
- Some items, such as toys, might attract children. Keep such items away from the computer.

Supervise children in rooms where the above safety instructions cannot be fully implemented.

Hazardous energy statement

DANGER

Disconnect all power cords from electrical outlets before removing the computer cover or any part that has the above label attached.

DO NOT disassemble components that have the above label attached. There are no serviceable parts inside these components.

Your product is designed for safe use. However, hazardous voltage, current, and energy levels are present inside any component that has this label attached. Disassembling of these components might cause fire or might even result in death. If you suspect a problem with one of these parts, contact a service technician.

CAUTION:



Bright Light, possible skin or eye damage. Disconnect power before servicing.

CAUTION:



Infrared Light, possible skin or eye damage. Disconnect power before servicing.

Eye comfort

The property of the display in combination with following notes result in reduced eye fatigue and increased comfort.

For tips on how to minimize visual fatigue, please go to https://www.lenovo.com/us/en/safecomp/ to visit “Minimizing Visual Fatigue”.

Tip-over hazard prevention notice

The computer may cause harm to children if it is not located in an appropriate place. Follow the tips below to protect children from harm caused by the computer tipping over:

- Place the computers or monitors on sturdy furniture with a low base or furniture that has been anchored. Push the computers or monitors as far from the edge of the furniture as possible..
- Keep remote controls, toys, and other items that might attract children away from the computers or monitors
- Keep the computer or monitor cables out the reach of the children.
- Supervise children in rooms where these safety tips have not been followed.

CAUTION:
Some parts of your product may be made of glass. This glass could break if the product is dropped on a hard surface or receives a substantial impact. If glass breaks, do not touch it or attempt to remove it. Stop using your product until the glass is replaced by trained service personnel.

Static electricity prevention

Static electricity, although harmless to you, can seriously damage computer components and options. Improper handling of static-sensitive parts can damage the part. When you unpack an option or CRU, do not open the static-protective package containing the part until the instructions direct you to install it.

When you handle options or CRUs, or perform any work inside the computer, take the following precautions to avoid static-electricity damage:

- Limit your movement. Movement can cause static electricity to build up around you.
- Always handle components carefully. Handle adapters, memory modules, and other circuit boards by the edges. Never touch exposed circuitry.
- Prevent others from touching components.
- When you install a static-sensitive option or CRU, touch the static-protective package containing the part to a metal expansion-slot cover or other unpainted metal surface on the computer for at least two seconds. This reduces static electricity in the package and your body.
- When possible, remove the static-sensitive part from the static-protective packaging and install the part without setting it down. When this is not possible, place the static-protective packaging on a smooth, level surface and place the part on it.
- Do not place the part on the computer cover or other metal surface.

Operating environment

Temperature

- Operating: From 10°C (50°F) to 35°C (95°F)
- Storage or transportation:
  - For common desktop computers: From -40°C (-40°F) to 55°C (131°F)
  - For all-in-one desktop computers: From -20°C (-4°F) to 55°C (131°F)

Note: If your computer is stored or transported in temperatures less than 10°C (50°F), allow the computer to rise slowly to an optimal operating temperature before use. This process might take up to two hours. Using the computer in a lower operating temperature might result in irreparable damage to your computer.

Relative humidity

- Operating: 35%-80% (non-condensing)
- Storage: 20%–93% (non-condensing)

Atmospheric pressure

86 kPa to 106 kPa

Cleaning and maintenance

With appropriate care and maintenance, your computer will serve you reliably. The following topics offer information to help you keep your computer working with best performance.

Basic maintenance tips

Here are some basic points about keeping your computer functioning properly:

- Keep the computer in a clean, dry environment. Ensure that the computer rests on a flat, steady surface.

- Do not cover any of air vents. These air vents provide airflow to keep the computer from overheating.
- Keep electrical appliances such as an electric fan, radio, high-powered speakers, air conditioner, and microwave oven away from your computer because the strong magnetic fields generated by these appliances can damage the monitor and data on the storage drive.
- Keep food and drinks away from all parts of the computer. Food particles and spills might make the keyboard and mouse stick and unusable.
- Do not get the power switches or other controls wet. Moisture can damage these parts and cause an electrical hazard.
- Always disconnect a power cord by grasping the plug instead of the cord.
- Keep the computer software, device drivers, and operating system up-to-date.
- Empty your recycle bin on a regular basis.
- Clean out your Inbox, Sent Items, and Deleted Items folders in your e-mail application on a regular basis.
- Clean up files and free up storage drive space and memory space occasionally to prevent performance problems.
- Keep a log book. Entries might include major software or hardware changes, device-driver updates, intermittent problems and what you did to resolve them, and other issues you might have experienced. The cause of a problem might be change in hardware, change in software, or any other actions that might have taken place. A log book can help you or a Lenovo technician determine the cause of a problem.
- Back up your data on the storage drive regularly. You can restore the storage drive from a backup.
- Create a recovery medium as early as possible. You can use the recovery medium to recover your operating system even if Windows fails to start up.
- Get the most up-to-date operating system update patches, software programs, and device drivers.

Maintenance tips about moving the computer

Before moving the computer, take the following precautions:

1. Back up your data on the storage drive.
2. Remove any media from the drives and turn off all connected devices and the computer. Then, disconnect all power cords from electrical outlets and disconnect all cables that are connected to the computer.
3. If you saved the original shipping cartons and packing materials, use them to pack the units. If you are using different cartons, cushion the units to avoid damage.

When you move the computer to another country or region, you must take local electrical standards into consideration. If the local electrical outlet style is different from the type you are currently using, contact the Lenovo Customer Support Center to purchase either an electrical plug adapter or a new power cord.

Clean your computer

CAUTION:
Remove any media from the drives and turn off all connected devices and the computer. Then, disconnect all power cords from electrical outlets and disconnect all cables that are connected to the computer.

It is a good practice to clean your computer periodically to protect the surfaces and ensure trouble-free operation.

Clean the computer surface: Wipe it with a lint-free cloth dampened in mild soap and water. Avoid applying liquids directly to the surface.

Clean the keyboard: Wipe the keys one by one with a lint-free cloth dampened in mild soap and water. If you wipe several keys at a time, the cloth might hook onto an adjacent key and possibly damage it. Avoid spraying cleaner directly onto the keyboard. To remove any crumbs or dust from beneath the keys, you can use a camera blower with a brush or use cool air from a hair dryer.

Clean the computer screen: Scratches, oil, dust, chemicals, and ultraviolet light can affect the performance of your computer screen. Use a dry, soft lint-free cloth to wipe the screen gently. If you see a scratchlike mark on your screen, it might be a stain. Wipe or dust the stain gently with a soft, dry cloth. If the stain remains, moisten a soft, lint-free cloth with water or eyeglass cleaner, but do not apply liquids directly to your computer screen. Ensure that the computer screen is dry before closing it.

Appendix B. Accessibility and ergonomic information

This chapter provides information about accessibility and ergonomics.

Accessibility information

Lenovo is committed to providing users who have hearing, vision, and mobility limitations with greater access to information and technology. This section provides information about the ways these users can get the most out of their computer experience. You also can get the most up-to-date accessibility information from the following Web site:
https://www.lenovo.com/accessibility

Keyboard shortcuts

The following list contains keyboard shortcuts that can help make your computer easier to use.

Note: Depending on your keyboard, some of the following keyboard shortcuts might not be available.

- **Windows logo key + U**: Open Ease of Access Center
- **Right Shift for eight seconds**: Turn on or turn off Filter Keys
- **Shift five times**: Turn on or turn off Sticky Keys
- **Num Lock for five seconds**: Turn on or turn off Toggle Keys
- **Left Alt+Left Shift+Num Lock**: Turn on or turn off Mouse Keys
- **Left Alt+Left Shift+PrtScn (or PrtSc)**: Turn on or turn off High Contrast

For more information, go to https://windows.microsoft.com, and then search using any of the following keywords: `keyboard shortcuts`, `key combinations`, `shortcut keys`.

Ease of Access Center

Ease of Access Center on the Windows operating system enables you to configure your computers to suit their physical and cognitive needs.

To access Ease of Access Center:

1. Go to **Control Panel** and view by Category.
2. Click **Ease of Access → Ease of Access Center**.
3. Choose the appropriate tool by following the on-screen instructions.

Ease of Access Center mainly includes the following tools:

- Magnifier

  Magnifier is a useful utility that enlarges the entire screen or part of the screen so that you can see the items better.
- Narrator

  Narrator is a screen reader that reads what is displayed on the screen aloud and describes events such as error messages.
- On-Screen Keyboard

  If you prefer to type or enter data into your computer using a mouse, joystick, or other pointing device instead of a physical keyboard, you can use On-Screen Keyboard. On-Screen Keyboard displays a visual

© Copyright Lenovo 2020

keyboard with all the standard keys. You can select keys using the mouse or another pointing device, or you can tap to select the keys if your computer supports multi-touch screen.

- High Contrast

  High Contrast is a feature that heightens the color contrast of some text and images on your screen. As a result, those items are more distinct and easier to identify.

- Personalized keyboard

  Adjust keyboard settings to make your keyboard easier to use. For example, you can use your keyboard to control the pointer and make the keyboard easier to type certain key combinations.

- Personalized mouse

  Adjust mouse settings to make your mouse easier to use. For example, you can change the pointer appearance and make your mouse easier to manage windows.

Speech Recognition

Speech Recognition enables you to control your computer by voice.

You can use verbal instructions to control the keyboard and mouse. With verbal instructions, you can start programs, open menus, click objects on the screen, dictate text into documents, and write and send e-mails.

To use Speech Recognition:

1. Go to **Control Panel** and view by Category.
2. Click **Ease of Access → Speech Recognition**.
3. Follow the on-screen instructions.

Screen-reader technologies

Screen-reader technologies are primarily focused on software program interfaces, help systems, and various online documents. For additional information about screen readers, see the following:

- Use PDFs with screen readers:

  https://www.adobe.com/accessibility.html?promoid=DJGVE

- Use the JAWS screen reader:

  https://www.freedomscientific.com/Products/Blindness/JAWS

- Use the NVDA screen reader:

  https://www.nvaccess.org/

Screen resolution

You can make the text and images on your screen easier to read by adjusting the screen resolution of your computer.

To adjust the screen resolution:

1. Right-click an empty area of the desktop and then click **Display settings → Display**.
2. Follow the on-screen instructions.

Note: Setting a resolution too low might prevent some items from fitting on the screen.

Customizable item size

You can make the items on your screen easier to read by changing the item size.

- To change the item size temporarily, use the Magnifier tool in Ease of Access Center.
- To change the item size permanently:

– Change the size of all the items on your screen.
  1. Right-click an empty area of the desktop and then click **Display settings → Display**.
  2. Change the item size by following the on-screen instructions. For some applications, your configuration might not take effect until you sign out and then sign in again.
– Change the size of the items on a Web page.

  Press and hold Ctrl, and then press the plus-sign key (+) to enlarge or the minus-sign key (–) to reduce the text size.
– Change the size of the items on the desktop or a window.

  Note: This function might not work on some windows.

  If your mouse has a wheel, press and hold Ctrl, and then scroll the wheel to change the item size.

Industry-standard connectors

Your computer provides industry-standard connectors that enable you to connect assistive devices.

Documentation in accessible formats

Lenovo provides electronic documentation in accessible formats, such as properly tagged PDF files or HyperText Markup Language (HTML) files. Lenovo electronic documentation is developed to ensure that visually impaired users can read the documentation through a screen reader. Each image in the documentation also includes adequate alternative text so that visually impaired users can understand the image when they use a screen reader.

Ergonomic information

Good ergonomic practice is important to get the most from your personal computer and to avoid discomfort. Arrange your workplace and the equipment you use to suit your individual needs and the kind of work that you perform. In addition, use healthy work habits to maximize your performance and comfort when using your computer.

Working in the virtual office might mean adapting to frequent changes in your environment. Adapting to the surrounding light sources, active seating, and the placement of your computer hardware, can help you improve your performance and achieve greater comfort.

This example shows someone in a conventional setting. Even when not in such a setting, you can follow many of these tips. Develop good habits, and they will serve you well.



General posture: Make minor modifications in your working posture to deter the onset of discomfort caused by long periods of working in the same position. Frequent short breaks from your work also help to prevent minor discomfort associated with your working posture.

Display: Position the display to maintain a comfortable viewing distance of 510 mm to 760 mm (20 inches to 30 inches). Avoid glare or reflections on the display from overhead lighting or outside sources of light. Keep the display screen clean and set the brightness to levels that enable you to see the screen clearly. Press the brightness control keys to adjust display brightness.

Head position: Keep your head and neck in a comfortable and neutral (vertical, or upright) position.

Chair: Use a chair that gives you good back support and seat height adjustment. Use chair adjustments to best suit your comfort posture.

Arm and hand position: If available, use chair arm rests or an area on your working surface to provide weight support for your arms. Keep your forearms, wrists, and hands in a relaxed and neutral (horizontal) position. Type with a soft touch without pounding the keys.

Leg position: Keep your thighs parallel to the floor and your feet flat on the floor or on a footrest.

Appendix C. Compliance information

This chapter provides regulatory, environmental, RoHS, and ENERGY STAR information about Lenovo products.

Radio frequency compliance statements

Computer models equipped with wireless communications comply with the radio frequency and safety standards of any country or region in which it has been approved for wireless use.

Besides this document, ensure that you read the *Regulatory Notice* for your country or region before using the wireless devices contained in your computer.

Locate wireless regulatory notices

For more information about the wireless regulatory notices, refer to the *Regulatory Notice* at: https://pcsupport.lenovo.com

European Union-compliance with the Radio Equipment Directive

- **For computer models with wireless radio devices:**

  This product is in conformity with all the requirements and essential norms that apply to EU Council Radio Equipment Directive 2014/53/EU on the approximation of the laws of the Member States relating to radio equipment. The full text of the system EU declaration of conformity and the EU wireless module declarations are available at:
  https://www.lenovo.com/us/en/compliance/eu-doc

  Lenovo cannot accept responsibility for any failure to satisfy the protection requirements resulting from a non-recommended modification of the product, including the installation of option cards from other manufacturers. This product has been tested and found to comply with the limits for Class B equipment according to European Standards harmonized in the Directives in compliance. The limits for Class B equipment were derived for typical residential environments to provide reasonable protection against interference with licensed communication devices.

- **For computer models without wireless radio devices:**

  The full text of the system EU declaration of conformity is available at:
  https://www.lenovo.com/us/en/compliance/eu-doc

  Lenovo cannot accept responsibility for any failure to satisfy the protection requirements resulting from a non-recommended modification of the product, including the installation of option cards from other manufacturers. This product has been tested and found to comply with the limits for Class B equipment according to European Standards harmonized in the Directives in compliance. The limits for Class B equipment were derived for typical residential environments to provide reasonable protection against interference with licensed communication devices.

Brazil

Este equipamento não tem direito à proteção contra interferência prejudicial e não pode causar interferência em sistemas devidamente autorizados.

This equipment is not protected against harmful interference and may not cause interference with duly authorized systems.

© Copyright Lenovo 2020

Mexico

Advertencia: En Mexico la operación de este equipo está sujeta a las siguientes dos condiciones: (1) es posible que este equipo o dispositivo no cause interferencia perjudicial y (2) este equipo o dispositivo debe aceptar cualquier interferencia, incluyendo la que pueda causar su operación no deseada.

Singapore

Complies with
IMDA Standards
DB102306

Korea

무선설비 전파 혼신 **(사용주파수 2400~2483.5 , 5725~5825 무선제품해당)**

해당 무선설비가 전파혼신 가능성이 있으므로 인명안전과 관련된 서비스는 할 수 없음

SAR 정보

본 장치는 전파 노출에 대한 가이드라인을 충족합니다.

본 장치는 무선 송수신기 입니다. 본 장치는 국제 가이드라인으로 권장되는 전파 노출에 대한 제한을 초과하지 않도록 설계되었습니다. 장치 액세서리 및 최신 부품을 사용할 경우 SAR 값이 달라질 수 있 습니다. SAR 값은 국가 보고 및 테스트 요구 사항과 네트워크 대역에 따라 다를 수 있습니다. 본 장치 는 사람의 신체에서 20mm 이상의 거리에서 사용할 수 있습니다.

Environmental information of countries and regions

This section provides environmental, recycling, and RoHS information about Lenovo products.

Recycling and environmental information

Lenovo encourages owners of information technology (IT) equipment to responsibly recycle their equipment when it is no longer needed. Lenovo offers a variety of programs and services to assist equipment owners in recycling their IT products. For information about recycling Lenovo products, go to:
https://www.lenovo.com/us/en/compliance/recycling

The latest environmental information about our products is available at:
https://www.lenovo.com/us/en/compliance/eco-declaration

Important WEEE information



The WEEE marking on Lenovo products applies to countries with WEEE and e-waste regulations (for example, the European WEEE Directive, India E-Waste Management Rules). Appliances are labeled in accordance with local regulations concerning waste electrical and electronic equipment (WEEE). These regulations determine the framework for the return and recycling of used appliances as applicable within

each geography. This label is applied to various products to indicate that the product is not to be thrown away, but rather put in the established collection systems for reclaiming these end of life products.

Users of electrical and electronic equipment (EEE) with the WEEE marking must not dispose of end of life EEE as unsorted municipal waste, but use the collection framework available to them for the return, recycle, and recovery of WEEE and to minimize any potential effects of EEE on the environment and human health due to the presence of hazardous substances. Lenovo electrical and electronic equipment (EEE) may contain parts and components, which at end-of-life might qualify as hazardous waste.

EEE and waste electrical and electronic equipment (WEEE) can be delivered free of charge to the place of sale or any distributor that sells electrical and electronic equipment of the same nature and function as the used EEE or WEEE.

For additional WEEE information, go to:
https://www.lenovo.com/us/en/compliance/recycling

WEEE information for Hungary

Lenovo, as a producer, bears the cost incurred in connection with the fulfillment of Lenovo's obligations under Hungary Law No. 197/2014 (VIII.1.) subsections (1)-(5) of section 12.

Japan recycling statements

Collect and recycle a disused Lenovo computer or monitor

If you are a company employee and need to dispose of a Lenovo computer or monitor that is the property of the company, you must do so in accordance with the Law for Promotion of Effective Utilization of Resources. Computers and monitors are categorized as industrial waste and should be properly disposed of by an industrial waste disposal contractor certified by a local government. In accordance with the Law for Promotion of Effective Utilization of Resources, Lenovo Japan provides, through its PC Collecting and Recycling Services, for the collecting, reuse, and recycling of disused computers and monitors. For details, visit the Lenovo Web site at:
https://www.lenovo.com/us/en/social_responsibility/sustainability/ptb_japan

Pursuant to the Law for Promotion of Effective Utilization of Resources, the collecting and recycling of home-used computers and monitors by the manufacturer was begun on October 1, 2003. This service is provided free of charge for home-used computers sold after October 1, 2003. For details, go to:
https://www.lenovo.com/us/en/social_responsibility/sustainability/ptb_japan

Dispose of Lenovo computer components

Some Lenovo computer products sold in Japan may have components that contain heavy metals or other environmental sensitive substances. To properly dispose of disused components, such as a printed circuit board or drive, use the methods described above for collecting and recycling a disused computer or monitor.

Dispose of disused lithium batteries from Lenovo computers

A button-shaped lithium battery is installed inside your Lenovo computer to provide power to the computer clock while the computer is off or disconnected from the main power source. If you need to replace it with a new one, contact your place of purchase or contact Lenovo for service. If you need to dispose of a disused lithium battery, insulate it with vinyl tape, contact your place of purchase or an industrial-waste-disposal operator, and follow their instructions.

Disposal of a lithium battery must comply with local ordinances and regulations.

Brazil recycling information

Declarações de Reciclagem no Brasil

Descarte de um Produto Lenovo Fora de Uso

Equipamentos elétricos e eletrônicos não devem ser descartados em lixo comum, mas enviados à pontos de coleta, autorizados pelo fabricante do produto para que sejam encaminhados e processados por empresas especializadas no manuseio de resíduos industriais, devidamente certificadas pelos orgãos ambientais, de acordo com a legislação local.

A Lenovo possui um canal específico para auxiliá-lo no descarte desses produtos. Caso você possua um produto Lenovo em situação de descarte, ligue para o nosso SAC ou encaminhe um e-mail para: reciclar@lenovo.com, informando o modelo, número de série e cidade, a fim de enviarmos as instruções para o correto descarte do seu produto Lenovo.

Battery recycling information for the European Union



Notice: This mark applies only to countries within the European Union (EU).

Batteries or packaging for batteries are labeled in accordance with European Directive 2006/66/EC concerning batteries and accumulators and waste batteries and accumulators. The Directive determines the framework for the return and recycling of used batteries and accumulators as applicable throughout the European Union. This label is applied to various batteries to indicate that the battery is not to be thrown away, but rather reclaimed upon end of life per this Directive.

In accordance with the European Directive 2006/66/EC, batteries and accumulators are labeled to indicate that they are to be collected separately and recycled at end of life. The label on the battery may also include a chemical symbol for the metal concerned in the battery (Pb for lead, Hg for mercury, and Cd for cadmium). Users of batteries and accumulators must not dispose of batteries and accumulators as unsorted municipal waste, but use the collection framework available to customers for the return, recycling, and treatment of batteries and accumulators. Customer participation is important to minimize any potential effects of batteries and accumulators on the environment and human health due to the potential presence of hazardous substances.

Before placing electrical and electronic equipment (EEE) in the waste collection stream or in waste collection facilities, the end user of equipment containing batteries and/or accumulators must remove those batteries and accumulators for separate collection.

Disposing of lithium batteries and battery packs from Lenovo products

A coin-cell type lithium battery might be installed inside your Lenovo product. You can find details about the battery in the product documentation. If the battery needs to be replaced, contact your place of purchase or contact Lenovo for service. If you need to dispose of a lithium battery, insulate it with vinyl tape, contact your place of purchase or a waste-disposal operator, and follow their instructions.

Disposing of battery packs from Lenovo products

Your Lenovo device might contain a lithium-ion battery pack or a nickel metal hydride battery pack. You can find details on the battery pack in the product documentation. If you need to dispose of a battery pack, insulate it with vinyl tape, contact Lenovo sales, service, or your place of purchase, or a waste-disposal operator, and follow their instructions. You also can refer to the instructions provided in the user guide for your product.

For proper collection and treatment, go to:
https://www.lenovo.com/lenovo/environment

Recycling information for mainland China

《废弃电器电子产品回收处理管理条例》提示性说明

联想鼓励拥有联想品牌产品的用户当不再需要此类产品时，遵守国家废弃电器电子产品回收处理相关法律法规，将其交给当地具有国家认可的回收处理资质的厂商进行回收处理。更多回收服务信息，请点击进入http://support.lenovo.com.cn/activity/551.htm

Battery recycling information for Taiwan



Electromagnetic emission notices

Federal Communications Commission (FCC) Supplier's Declaration of Conformity

The following information refers to IdeaCentre 5 14IMB05, machine types: 90NA and 90NQ.

This equipment has been tested and found to comply with the limits for a Class B digital device, pursuant to Part 15 of the FCC Rules. These limits are designed to provide reasonable protection against harmful interference in a residential installation. This equipment generates, uses, and can radiate radio frequency energy and, if not installed and used in accordance with the instructions, may cause harmful interference to radio communications. However, there is no guarantee that interference will not occur in a particular installation. If this equipment does cause harmful interference to radio or television reception, which can be determined by turning the equipment off and on, the user is encouraged to try to correct the interference by one or more of the following measures:

- Reorient or relocate the receiving antenna.
- Increase the separation between the equipment and receiver.
- Connect the equipment into an outlet on a circuit different from that to which the receiver is connected.
- Consult an authorized dealer or service representative for help.

Lenovo is not responsible for any radio or television interference caused by using other than recommended cables and connectors or by unauthorized changes or modifications to this equipment. Unauthorized changes or modifications could void the user's authority to operate the equipment.

This device complies with Part 15 of the FCC Rules. Operation is subject to the following two conditions: (1) this device may not cause harmful interference, and (2) this device must accept any interference received, including interference that may cause undesired operation.

Responsible Party:
Lenovo (United States) Incorporated
7001 Development Drive
Morrisville, NC 27560
Email: FCC@lenovo.com

Industry Canada compliance statement

CAN ICES-3(B)/NMB-3(B)

European Union conformity

EU Contact: Lenovo (Slovakia), Landererova 12, 811 09 Bratislava, Slovakia

Compliance with the EMC Directive

This product is in conformity with the protection requirements of EU Council Directive 2014/30/EU on the approximation of the laws of the Member States relating to electromagnetic compatibility.

This product has been tested and found to comply with the limits for Class B equipment according to European Standards harmonized in the Directives in compliance. The Class B requirements for equipment are intended to offer adequate protection to broadcast services within residential environments.

German Class B compliance statement

Hinweis zur Einhaltung der Klasse B zur elektromagnetischen Verträglichkeit

Dieses Produkt entspricht den Schutzanforderungen der EU-Richtlinie zur elektromagnetischen Verträglichkeit Angleichung der Rechtsvorschriften über die elektromagnetische Verträglichkeit in den EU-Mitgliedsstaaten und hält die Grenzwerte der Klasse B der Norm gemäß Richtlinie.

Um dieses sicherzustellen, sind die Geräte wie in den Handbüchern beschrieben zu installieren und zu betreiben. Des Weiteren dürfen auch nur von der Lenovo empfohlene Kabel angeschlossen werden. Lenovo übernimmt keine Verantwortung für die Einhaltung der Schutzanforderungen, wenn das Produkt ohne Zustimmung der Lenovo verändert bzw. wenn Erweiterungskomponenten von Fremdherstellern ohne Empfehlung der Lenovo gesteckt/eingebaut werden.

Zulassungsbescheinigung laut dem Deutschen Gesetz über die elektromagnetische Verträglichkeit von Betriebsmitteln, EMVG vom 20. Juli 2007 (früher Gesetz über die elektromagnetische Verträglichkeit von Geräten), bzw. der EU Richtlinie 2014/30/EU, der EU Richtlinie 2014/53/EU Artikel 3.1b), für Geräte der Klasse B.

Dieses Gerät ist berechtigt, in Übereinstimmung mit dem Deutschen EMVG das EG-Konformitätszeichen - CE - zu führen. Verantwortlich für die Konformitätserklärung nach Paragraf 5 des EMVG ist die Lenovo (Deutschland) GmbH, Meitnerstr. 9, D-70563 Stuttgart.

Japan VCCI Class B compliance statement

この装置は、クラスB機器です。この装置は、住宅環境で使用することを目的としていますが、この装置がラジオやテレビジョン受信機に近接して使用されると、受信障害を引き起こすことがあります。
取扱説明書に従って正しい取り扱いをして下さい。

VCCI-B

Japan compliance statement for products which connect to the power mains with rated current less than or equal to 20 A per phase

日本の定格電流が 20A/相 以下の機器に対する高調波電流規制
高調波電流規格 JIS C 61000-3-2 適合品

Japan notice for ac power cord

The ac power cord shipped with your product can be used only for this specific product. Do not use the ac power cord for other devices.

本製品およびオプションに電源コード・セットが付属する場合は、
それぞれ専用のものになっていますので他の電気機器には使用し
ないでください。

Other compliance information of countries and regions

This section provides other compliance information about Lenovo products.

Certification-related information

Product name: IdeaCentre 5 14IMB05

Machine types: 90NA and 90NQ

The latest compliance information is available at:
https://www.lenovo.com/us/en/compliance

Export classification notice

This product is subject to the United States Export Administration Regulations (EAR) and has an Export Classification Control Number (ECCN) of 5A992.c. It can be re-exported except to any of the embargoed countries in the EAR E1 country list.

Lenovo product service information for Taiwan

委製商/進口商名稱: 荷蘭商聯想股份有限公司台灣分公司
進口商地址: 台北市中山區北安路780號7樓
進口商電話: 0800-000-702 (代表號)

Taiwan precautionary vision statement

警語：使用過度恐傷害視力

注意事項：

- 使用30分鐘請休息10分鐘。
- 未滿2歲幼兒不看螢幕，2歲以上每天看螢幕不要超過1小時。

Keyboard and mouse compliance statement for Taiwan

本產品隨貨附已取得經濟部標準檢驗局認可之PS/2或USB的鍵盤與滑鼠一組

Eurasian compliance mark



Brazil audio notice

Ouvir sons com mais de 85 decibéis por longos períodos pode provocar danos ao sistema auditivo.

Enable or disable the ErP LPS compliance mode

Lenovo computers meet the eco-design requirements of the ErP Lot 3 regulation. For more information, go to:
https://www.lenovo.com/us/en/compliance/eco-declaration

You can enable the ErP LPS compliance mode to reduce the consumption of electricity when the computer is off or in sleep mode.

To enable or disable the ErP LPS compliance mode:

1. Restart the computer. When the logo screen is displayed, press F1 or Fn+F1.
2. Select **Power → Enhanced Power Saving Mode** and press Enter.
3. Depending on whether you select **Enabled** or **Disabled**, do one of the following:
   - If you select **Enabled**, press Enter. Then, select **Power → Automatic Power On** and press Enter. Check whether the Wake on LAN feature is disabled automatically. If no, disable it.
   - If you select **Disabled**, press Enter. Then, go to the next step.
4. Press F10 or Fn+F10 to save the changes and exit.

When the ErP LPS compliance mode is enabled, you can wake up the computer by doing one of the following:

- Press the power button.
- Enable the Wake Up on Alarm feature to make the computer wake up at a set time.

To meet the off mode requirement of ErP compliance, you need to disable the Fast Startup function.

1. Go to **Control Panel** and view by large icons or small icons.
2. Click **Power Options → Choose what the power buttons do → Change settings that are currently unavailable**.
3. Clear the **Turn on fast startup (recommended)** option from the **Shutdown settings** list.

ENERGY STAR model information



ENERGY STAR is a joint program of the U.S. Environmental Protection Agency and the U.S. Department of Energy aimed at saving money and protecting the environment through energy efficient products and practices.

Lenovo is proud to offer products with the ENERGY STAR certified designation. Lenovo computers, if carry an ENERGY STAR mark, have been designed and tested to conform to the ENERGY STAR program requirements for computers as prescribed by the U.S. Environmental Protection Agency. For a certified computer, an ENERGY STAR mark may be affixed to the product, the product packaging, or displayed electronically on the E-label screen or the power settings interface.

By using ENERGY STAR compliant products and taking advantage of the power management features of your computer, you reduce the consumption of electricity. Reduced electrical consumption contributes to potential financial savings, a cleaner environment, and the reduction of greenhouse gas emissions. For more information about ENERGY STAR, go to https://www.energystar.gov.

Lenovo encourages you to make efficient use of energy an integral part of your day-to-day operations. To help in this endeavor, Lenovo has preset a default power plan. To change the power plan, see “Set the power plan” on page 9.

Appendix D. Notices and trademarks

Notices

Lenovo may not offer the products, services, or features discussed in this document in all countries. Consult your local Lenovo representative for information on the products and services currently available in your area. Any reference to a Lenovo product, program, or service is not intended to state or imply that only that Lenovo product, program, or service may be used. Any functionally equivalent product, program, or service that does not infringe any Lenovo intellectual property right may be used instead. However, it is the user's responsibility to evaluate and verify the operation of any other product, program, or service.

Lenovo may have patents or pending patent programs covering subject matter described in this document. The furnishing of this document does not give you any license to these patents. You can send license inquiries, in writing, to:

Lenovo (United States), Inc.
8001 Development Drive
Morrisville, NC 27560
U.S.A.
Attention: Lenovo Director of Licensing

LENOVO PROVIDES THIS PUBLICATION "AS IS" WITHOUT WARRANTY OF ANY KIND, EITHER EXPRESS OR IMPLIED, INCLUDING, BUT NOT LIMITED TO, THE IMPLIED WARRANTIES OF NON-INFRINGEMENT, MERCHANTABILITY OR FITNESS FOR A PARTICULAR PURPOSE. Some jurisdictions do not allow disclaimer of express or implied warranties in certain transactions, therefore, this statement may not apply to you.

Changes are made periodically to the information herein; these changes will be incorporated in new editions of the publication. To provide better service, Lenovo reserves the right to improve and/or modify the products and software programs described in the manuals included with your computer, and the content of the manual, at any time without additional notice.

The software interface and function and hardware configuration described in the manuals included with your computer might not match exactly the actual configuration of the computer that you purchase. For the configuration of the product, refer to the related contract (if any) or product packing list, or consult the distributor for the product sales. Lenovo may use or distribute any of the information you supply in any way it believes appropriate without incurring any obligation to you.

The products described in this document are not intended for use in implantation or other life support applications where malfunction may result in injury or death to persons. The information contained in this document does not affect or change Lenovo product specifications or warranties. Nothing in this document shall operate as an express or implied license or indemnity under the intellectual property rights of Lenovo or third parties. All information contained in this document was obtained in specific environments and is presented as an illustration. The result obtained in other operating environments may vary.

Lenovo may use or distribute any of the information you supply in any way it believes appropriate without incurring any obligation to you.

Any references in this publication to non-Lenovo Web sites are provided for convenience only and do not in any manner serve as an endorsement of those Web sites. The materials at those Web sites are not part of the materials for this Lenovo product, and use of those Web sites is at your own risk.

© Copyright Lenovo 2020

Any performance data contained herein was determined in a controlled environment. Therefore, the result obtained in other operating environments may vary significantly. Some measurements may have been made on development-level systems and there is no guarantee that these measurements will be the same on generally available systems. Furthermore, some measurements may have been estimated through extrapolation. Actual results may vary. Users of this document should verify the applicable data for their specific environment.

This document is copyrighted by Lenovo and is not covered by any open source license, including any Linux agreement(s) which may accompany software included with this product. Lenovo may update this document at any time without notice.

For the latest information or any questions or comments, contact or visit the Lenovo Web site:
https://pcsupport.lenovo.com

Trademarks

LENOVO, LENOVO logo, IDEACENTRE, and IDEACENTRE logo are trademarks of Lenovo. Intel, Intel SpeedStep, Optane, and Thunderbolt are trademarks of Intel Corporation or its subsidiaries in the U.S. and/or other countries. Microsoft, Windows, Direct3D, BitLocker, and Cortana are trademarks of the Microsoft group of companies. Mini DisplayPort (mDP), DisplayPort, and VESA are trademarks of the Video Electronics Standards Association. The terms HDMI and HDMI High-Definition Multimedia Interface are trademarks or registered trademarks of HDMI Licensing LLC in the United States and other countries. Wi-Fi, Wi-Fi Alliance, WiGig, and Miracast are registered trademarks of Wi-Fi Alliance. USB-C is a trademark of USB Implementers Forum. All other trademarks are the property of their respective owners. © 2020 Lenovo.


Lenovo