ThinkCentre M70s/M70t

Setup Guide

Lenovo

Initial Setup

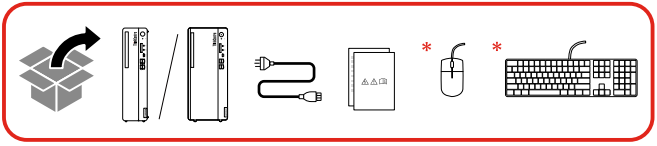

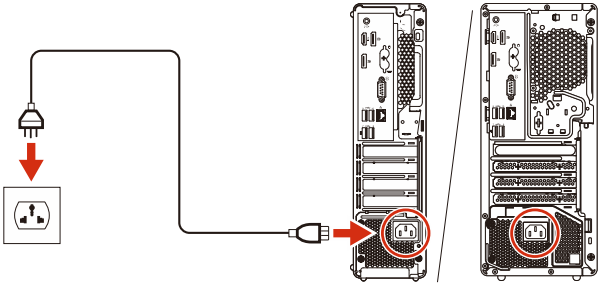

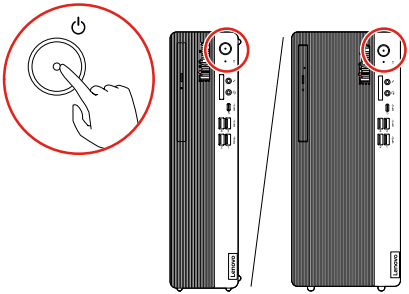

* For selected models

Overview

M70s

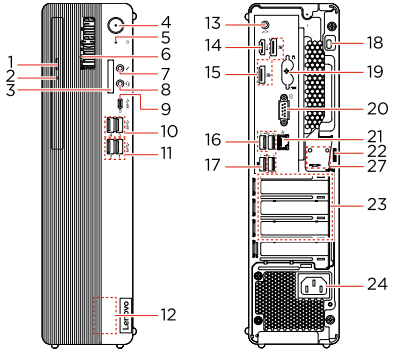

M70t

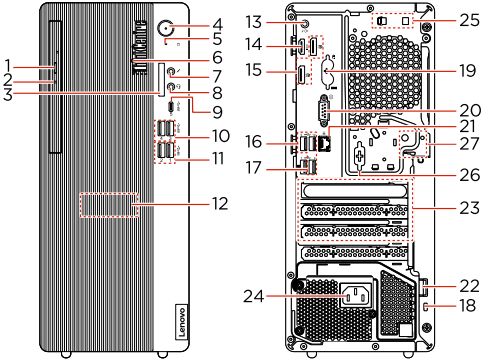

* 1. Optical drive eject button
* 2. Optical drive activity indicator
* 3. SD-card slot
4. Power button
5. Storage drive activity indicator
6. ThinkCentre® LED
7. Microphone connector
8. Headset connector
9. USB-C® (3.2 Gen 1) connector
10. USB 3.2 connectors Gen 1
11. USB 3.2 connectors Gen 2
12. Internal speaker
13. Audio line-out connector
14. HDMI™ out connector
15. DisplayPort™ out connectors
16. USB 2.0 connectors
17. USB 2.0 connector
18. Security-lock slot
* 19. PS/2 keyboard and mouse connector
20. Serial connector
21. Ethernet connector
22. Padlock loop
23. PCI-Express card area
24. Power cord connector
25. Smart cable clip slots
* 26. Serial connector
27. E-lock slots

Read the statement on USB transfer rate in the *User Guide*. Refer to the *Safety and Warranty Guide* for accessing the *User Guide*.

Customer Replaceable Units (CRUs)

- Computer cover
- Front bezel
* • Keyboard
* • Mouse
* • Optical drive
* • Optical drive bracket
* • Primary storage drive
* • Primary storage drive bracket
* • Secondary storage drive
* • Secondary storage drive bracket
- Memory module
* • M.2 solid-state drive
* • Heat sink for the M.2 solid-state drive
* • M.2 solid-state drive bracket
* • Storage converter
* • PCI-Express card
* • PCI-Express connector cable
- Power cord
* • Vertical stand
* • Smart cable clip
- Coin-cell battery
* • E-lock
- Power supply assembly

Refer to the *User Guide* for CRU definition.

* For selected models

Additional information

European Union (EU) / United Kingdom (UK) — Radio Equipment Compliance

Hereby, Lenovo declares that the radio equipment type ThinkCentre M70s/M70t is in compliance with Directive 2014/53/EU, as well as UK Radio Equipment Regulations SI 2017 No. 1206.

The full text of the system declarations of conformity are available at:

https://www.lenovo.com/us/en/compliance/eu-doc for EU and
https://www.lenovo.com/us/en/compliance/uk-doc for UK.

This radio equipment operates with the following frequency bands and maximum radio-frequency power:

Technology	Frequency band [MHz]	Maximum transmit power
WLAN 802.11b/g/n/ax	2400 - 2483.5	< 20 dBm
WLAN 802.11a/n/ac/ax	5150 - 5725	< 23 dBm
WLAN 802.11a/n/ac/ax	5725 - 5875	< 13.98 dBm
Bluetooth BR/EDR/LE	2400 - 2483.5	< 20 dBm

Usage of this device is limited to indoor use in the WLAN band 5150 – 5350 MHz.

LENOVO, LENOVO logo, THINKCENTRE, and THINKCENTRE logo are trademarks of Lenovo. DisplayPort is a trademark of the Video Electronics Standards Association. The terms HDMI and HDMI High-Definition Multimedia Interface are trademarks or registered trademarks of HDMI Licensing LLC in the United States and other countries. USB-C is a registered trademark of USB Implementers Forum. All other trademarks are the property of their respective owners. © 2021 Lenovo.

E-manual

M70s

M70t

Second Edition (June 2021)

© Copyright Lenovo 2020, 2021.

LIMITED AND RESTRICTED RIGHTS NOTICE: If data or software is delivered pursuant to a General Services Administration “GSA” contract, use, reproduction, or disclosure is subject to restrictions set forth in Contract No. GS-35F-05925.

Reduce I Reuse I Recycle