DATASHEET - CI48-250-NA



Insulated enclosure, top+bottom open, HxWxD=796x421x275mm, NA type

Powering Business Worldwide™

Part no.	**CI48-250-NA**
Catalog No.	**002254**
EL-Nummer (Norway)	**2502062**

Delivery program

Product range			xEnergy Safety Ci
Basic function			Basic enclosures
Product function			Distribution board enclosures for North America Panel enclosures with cover and flanges
Single unit/Complete unit			Single unit
Standards			UL508A
Degree of Protection			IP65
Description			Fitted with removable smooth flanges on all 4 sides Fixing straps for wall fixing Sealable cover fasteners
Type cover			Transparent
Surface finish			RAL 7035 (base) Transparent, smoky gray (cover)
Dimensions			
Width		mm	421
Height		mm	796
Depth		mm	275
Mounting depth:		mm	250
Model base			Enclosure side plates with flanges
Model base			Enclosure side plates with removable smooth flanges

Technical data

General

Standards			UL508A
Climatic proofing			Damp heat, constant, to IEC 60068-2-78 Damp heat, cyclic, to IEC 60068-2-30
Ambient temperature		°C	-40 - +80
Degree of Protection			IP65
Operating and ambient conditions to VDE 0660 Part 500			
Surface finish			RAL 7035 (base) Transparent, smoky gray (cover)

Material characteristics

Surface finish			RAL 7035 (base) Transparent, smoky gray (cover)

Material properties

Electrical			
Track resistance			KB160, KC175 (base, to IEC 60112) KB100, KC200 (cover, to IEC 60112)
Surface resistance to IEC 60093		$\Omega \times 10^{13}$	1
Dielectric strength to IEC 60243-1		kV/mm	30
Mechanical			
Impact resistance			please require
Atmospheric			
Saline spray			IEC 60068-2-11
UV resistance			Beneath protective shield
Water consumption to DIN EN ISO 62		%	0.29

Design verification as per IEC/EN 61439

Technical data for design verification			
Heat dissipation, at an ambient temperature of 35°C, delta T: 20 degrees in top of the enclosure, calculated as per IEC 60890			
Individual enclosure for wall mounting	P_V	W	52
Starting enclosure for wall mounting	P_V	W	48
Middle enclosure for wall mounting	P_V	W	44
Heat dissipation, at an ambient temperature of 35°C, delta T: 35 degrees in top of the enclosure, calculated as per IEC 60890			
Individual enclosure for wall mounting	P_V	W	105
Starting enclosure for wall mounting	P_V	W	96
Middle enclosure for wall mounting	P_V	W	88
IEC/EN 61439 design verification			
10.2 Strength of materials and parts			
10.2.2 Corrosion resistance			Meets the product standard's requirements.
10.2.3.1 Verification of thermal stability of enclosures			Meets the product standard's requirements.
10.2.3.2 Verification of resistance of insulating materials to normal heat			Meets the product standard's requirements.
10.2.3.3 Verification of resistance of insulating materials to abnormal heat and fire due to internal electric effects			Lower part: 960 °C / cover: 850 °C; meets the product standard's requirements.
10.2.4 Resistance to ultra-violet (UV) radiation			Not relevant to indoor installations.
10.2.5 Lifting			40 kg per enclosure with support frame and lifting aid met, assembled and secured as per the latest applicable instruction leaflet.
10.2.6 Mechanical impact			IK10
10.2.7 Inscriptions			Meets the product standard's requirements.
10.3 Degree of protection of ASSEMBLIES			IP65
10.4 Clearances and creepage distances			Is the panel builder's responsibility.
10.5 Protection against electric shock			Protection class 2, therefore not applicable.
10.6 Incorporation of switching devices and components			Is the panel builder's responsibility.
10.7 Internal electrical circuits and connections			Is the panel builder's responsibility.
10.8 Connections for external conductors			Is the panel builder's responsibility.
10.9 Insulation properties			
10.9.2 Power-frequency electric strength			U_i = 1000 V AC
10.9.3 Impulse withstand voltage			8 kV
10.9.4 Testing of enclosures made of insulating material			Meets the product standard's requirements.
10.10 Temperature rise			The panel builder is responsible for the temperature rise calculation. Eaton will provide heat dissipation data for the devices.
10.11 Short-circuit rating			Is the panel builder's responsibility.
10.12 Electromagnetic compatibility			Is the panel builder's responsibility.
10.13 Mechanical function			Meets the product standard's requirements.

Technical data ETIM 8.0

Distribution boards (EG000023) / Empty cabinet (EC000058)			
Electric engineering, automation, process control engineering / Electrical installation, device / Electrical distribution system (incl. small distribution board) / Empty cabinet (small distribution board) (ecl@ss10.0.1-27-14-24-08 [ACN385011])			
Mounting method			Surface mounted (plaster)
Type of cover			Optional
Cover model			Closed
Type of door			None
Transparent cover/door			Yes
With lock			No
Nominal current (In)		A	1600
Height		mm	750
Width		mm	375
Depth		mm	275
Built-in depth		mm	250
Internal depth		mm	250
Material plate thickness cabinet		mm	6

Material plate thickness door/cover	mm	6
Colour		Grey
RAL-number		7035
Number of modules		1
Number of rows		0
Width in number of modular spacings		17
Number of openings for flange plates		0
Extension possible		Yes
Number of conduit inlets		0
Material housing		Plastic
Surface protection		Other
With mounting plate		No
Suitable for outdoor use		Yes
Suitable for lightning protection		Yes
Degree of protection (IP)		IP65
Degree of protection (NEMA)		13
Protection class		II
Impact strength		IK10
Circuit integrity		Other
Cover with overpressure release		Yes

Approvals

Product Standards	UL 508A; CSA-C22.2 No.94; IEC/EN62208; CE marking
UL File No.	E499317
UL Category Control No.	NITW
North America Certification	UL listed
Specially designed for North America	Yes
Suitable for	Industrial Control Panels
Degree of Protection	IEC: IP65; UL/CSA Types 1, 12, 13, indoor only

Dimensions

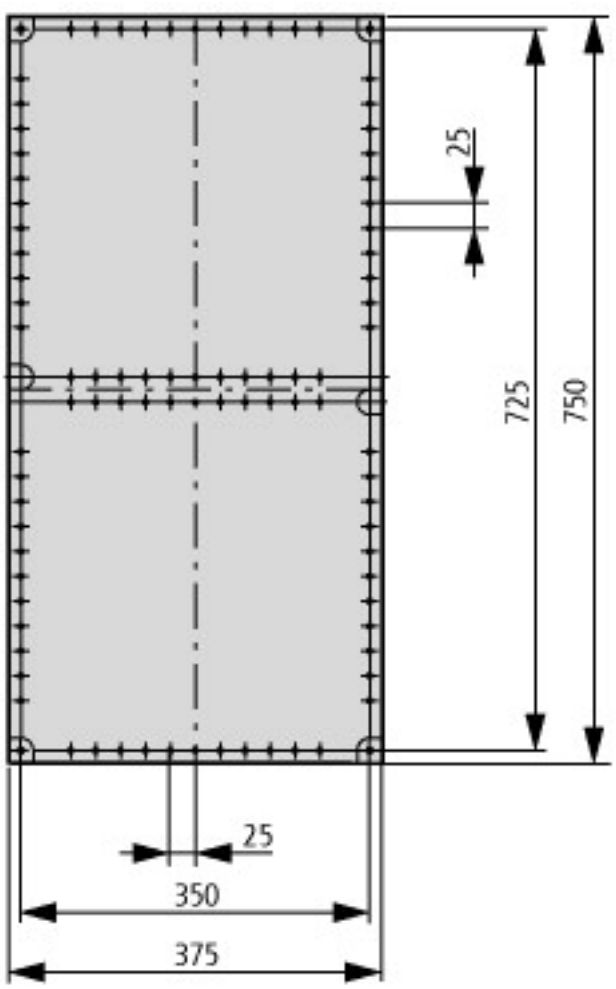
25
725
750
25
350
375

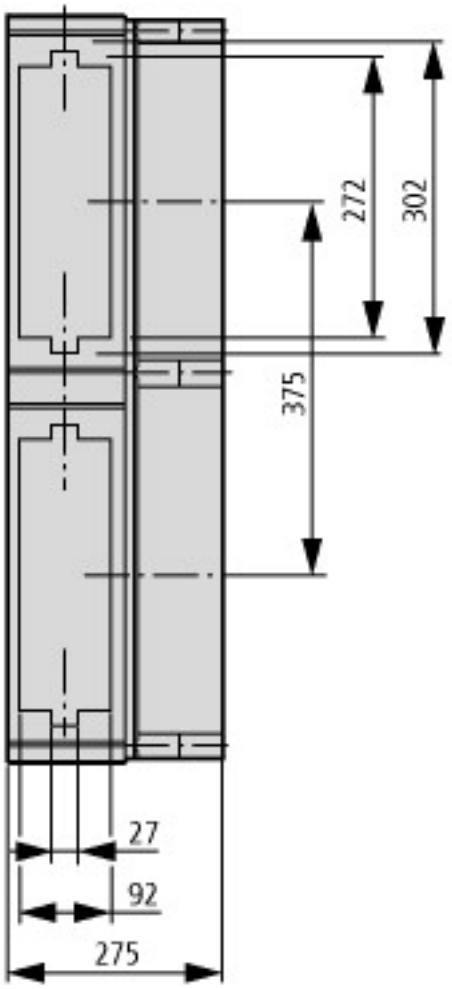
272
302
375
27
92
275

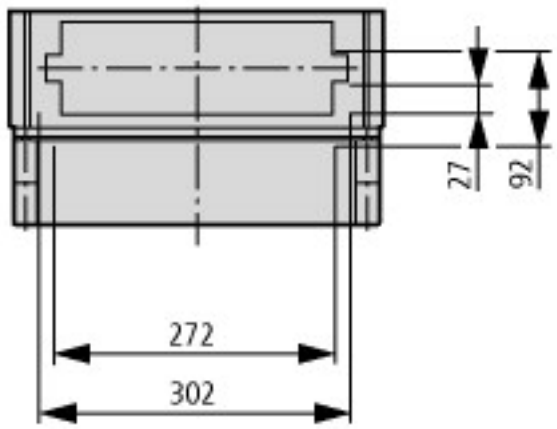
27
92
272
302

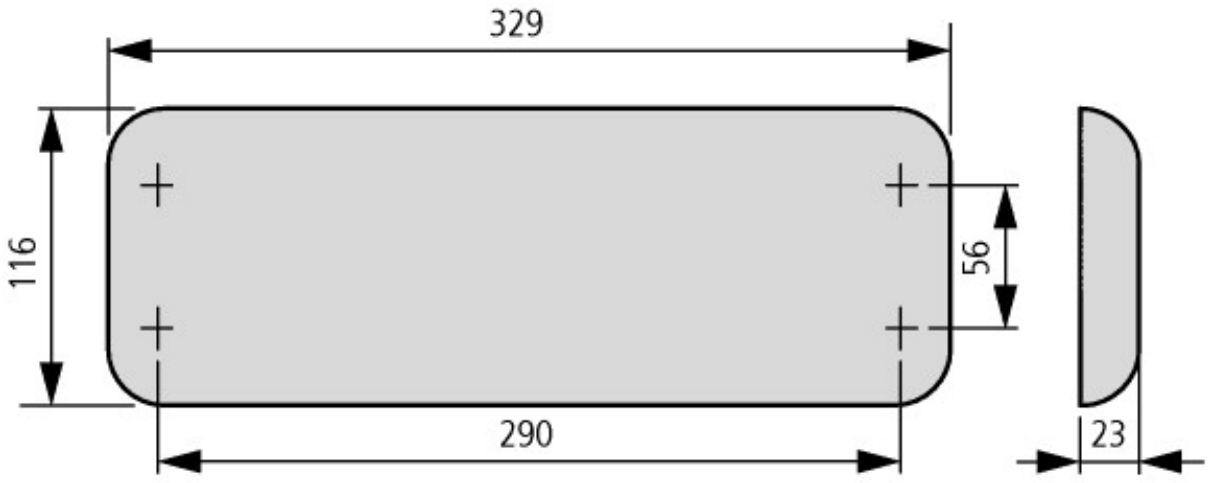
329
116
56
290
23

Additional product information (links)

allowInterrupt=1&RevisionSelectionMethod=LatestReleased&noSaveAs=0&Rendit model certification xEnergy Safety Ci	http://www.eaton.eu/DE/ecm/idcplg?IdcService=GET_FILE&amp
allowInterrupt=1&RevisionSelectionMethod=LatestReleased&noSaveAs=0&Rendit Save time – we assist you with expert pre-assembly	http://www.eaton.eu/DE/ecm/idcplg?IdcService=GET_FILE&amp
allowInterrupt=1&RevisionSelectionMethod=LatestReleased&noSaveAs=0&Rendit product information xEnergy Safety Ci	http://www.eaton.eu/DE/ecm/idcplg?IdcService=GET_FILE&amp

© 05/2022 by Eaton Industries GmbH