Lenovo ThinkSystem SR665 Server
Product Guide

The Lenovo ThinkSystem SR665 is a 2-socket 2U server that features the AMD EPYC 7002 "Rome" and AMD EPYC 7003 "Milan" families of processors. With up to 64 cores per processor and support for the new PCIe 4.0 standard for I/O, the SR665 offers the ultimate in two-socket server performance in a 2U form factor. The server is ideal for dense workloads that can take advantage of GPU processing and high-performance NVMe drives.

Suggested uses: Inference, virtualization, VDI, HPC, Hyperconverged infrastructure



Figure 1. Lenovo ThinkSystem SR665

Did you know?

The SR665 server is a very configuration-rich offering, supporting 28 different drive bay configurations in the front, middle and rear of the server and 5 different slot configurations at the rear of the server. This level of flexibility ensures that you can configure the server exactly the way your workload requires.

The server has been designed to take advantage of the features of the EPYC 7002 and EPYC 7003 processors, such as the full performance of 280W 64-core processors, support for 3200 MHz memory and PCIe Gen 4.0 support. Competitive servers that are based on the older EPYC 7001 "Naples" designs may not be able to offer these performance features.

Key features

Combining performance and flexibility, the SR665 server is a great choice for enterprises of all sizes. The server offers a broad selection of drive and slot configurations and offers high performance features that industries such as finance, healthcare and telco need. Outstanding reliability, availability, and serviceability (RAS) and high-efficiency design can improve your business environment and can help save operational costs.

Scalability and performance

The SR665 offers numerous features to boost performance, improve scalability and reduce costs:

- Supports the AMD EPYC 7002 and EPYC 7003 families family of processors
- Supports processors with up to 64 cores and 128 threads, core speeds of up to 4.1 GHz, and TDP ratings of up to 280W.
- Support for up to 32 TruDDR4 memory DIMMs with two processors (16 DIMMs per processor). Each processor has 8 memory channels and 2 DIMMs per channel. With 1 DIMM installed per channel (8 DIMMs total), memory operates at 3200 MHz. Using Performance+ RDIMMs, the server supports 2 DIMMs per channel (16 DIMMs total) operating at 3200 MHz.
- Using 256GB 3DS RDIMMs, the server supports up to 8TB of system memory.
- Supports up to eight single-width GPUs or three double-wide GPUs, for substantial processing power in a 2U system.
- Supports up to 40x 2.5-inch hot-swap drive bays, by using combinations of front-accessible (up to 24 bays), mid bays (8 bays) and rear-accessible (8 bays).
- Supports 20x 3.5-inch drive bays for lower-cost high-capacity HDD storage. 2.5-inch and 3.5-inch drive bays can be mixed if desired.
- Supports 16x NVMe drives without oversubscription of PCIe lanes (1:1 connectivity), or up to 32 NVMe drives with a 1:2 oversubscription. The use of NVMe drives maximizes drive I/O performance, in terms of throughput, bandwidth, and latency.
- Supports 12x SATA drives using the onboard SATA controller (no additional adapter needed), enabling lower cost, high capacity storage solution for cold storage workloads.
- Supports high-speed RAID controllers from Broadcom providing 12 Gb SAS connectivity to the drive backplanes. A variety of PCIe 3.0 and PCIe 4.0 RAID adapters are available.
- Supports up to two externally accessible 7mm hot-swap drives with RAID functionality for operating system boot functions or data storage
- Supports M.2 drives for convenient operating system boot functions or data storage. Available M.2 adapters support either one M.2 drive or two M.2 drives in a RAID 1 configuration for performance and reliability.
- The server has a dedicated industry-standard OCP 3.0 small form factor (SFF) slot, with a PCIe 4.0 x16 interface, supporting a variety of Ethernet network adapters. Simple-swap mechanism with thumbscrews and pull-tab enables tool-less installation and removal of the adapter. Supports shared BMC network sideband connectivity to enable out-of-band systems management.
- The server offers PCI Express 4.0 I/O expansion capabilities that doubles the theoretical maximum bandwidth of PCIe 3.0 (16GT/s in each direction for PCIe 4.0, compared to 8 GT/s with PCIe 3.0). A PCIe 4.0 x16 slot provides 64 GB/s bandwidth, enough to support a 200GbE network connection.
- Up to eight PCIe 4.0 slots, all with rear access, plus an internal bay for a cabled RAID adapter or HBA, plus a slot dedicated to the OCP adapter.

Availability and serviceability

The SR665 provides many features to simplify serviceability and increase system uptime:

- The server uses ECC memory and supports memory RAS features including Single Device Data Correction (SDDC, also known as Chipkill), Patrol/Demand Scrubbing, DRAM Address Command Parity with Replay, and DRAM Uncorrected ECC Error Retry.
- The server offers hot-swap drives, supporting RAID redundancy for data protection and greater system uptime.
- Available M.2 RAID Boot Adapters support RAID-1 which can enable two SATA or two NVMe M.2 drives to be configured as a redundant pair.
- The server has up to two hot-swap redundant power supplies and up to six hot-swap redundant fans to provide availability for business-critical applications.
- The power-source-independent light path diagnostics uses LEDs to lead the technician to failed (or failing) components, which simplifies servicing, speeds up problem resolution, and helps improve system availability.
- Solid-state drives (SSDs) offer more reliability than traditional mechanical HDDs for greater uptime.
- Proactive Platform Alerts (including PFA and SMART alerts): Processors, voltage regulators, memory, internal storage (SAS/SATA HDDs and SSDs, NVMe SSDs, M.2 storage, flash storage adapters), fans, power supplies, RAID controllers, server ambient and subcomponent temperatures. Alerts can be surfaced through the XClarity Controller to managers such as Lenovo XClarity Administrator, VMware vCenter, and Microsoft System Center. These proactive alerts let you take appropriate actions in advance of possible failure, thereby increasing server uptime and application availability.
- The built-in XClarity Controller continuously monitors system parameters, triggers alerts, and performs recovery actions in case of failures to minimize downtime.
- Built-in diagnostics in UEFI, using Lenovo XClarity Provisioning Manager, speed up troubleshooting tasks to reduce service time.
- Lenovo XClarity Provisioning Manager supports diagnostics and can save service data to a USB key drive or remote CIFS share folder for troubleshooting and reduce service time.
- Auto restart in the event of a momentary loss of AC power (based on power policy setting in the XClarity Controller service processor)
- Offers a diagnostics port on the front of the server to allow you to attach an external diagnostics handset for enhanced systems management capabilities.
- Support for the XClarity Administrator Mobile app running on a supported smartphone and connected to the server through the service-enabled USB port, enables additional local systems management functions.
- Three-year or one-year customer-replaceable unit and onsite limited warranty, 9 x 5 next business day. Optional service upgrades are available.

Manageability and security

Systems management features simplify local and remote management of the SR665:

- The server includes an XClarity Controller (XCC) to monitor server availability. Optional upgrade to XCC Advanced to provide remote control (keyboard video mouse) functions. Optional upgrade to XCC Enterprise enables the additional support for the mounting of remote media files (ISO and IMG image files), boot capture, and power capping.
- Lenovo XClarity Administrator offers comprehensive hardware management tools that help to increase uptime, reduce costs and improve productivity through advanced server management capabilities.
- UEFI-based Lenovo XClarity Provisioning Manager, accessible from F1 during boot, provides

system inventory information, graphical UEFI Setup, platform update function, RAID Setup wizard, operating system installation function, and diagnostic functions.

- Support for Lenovo XClarity Energy Manager which captures real-time power and temperature data from the server and provides automated controls to lower energy costs.
- An integrated industry-standard Unified Extensible Firmware Interface (UEFI) enables improved setup, configuration, and updates, and simplifies error handling.
- Support for industry standard management protocols, IPMI 2.0, SNMP 3.0, Redfish REST API, serial console via IPMI
- An integrated hardware Trusted Platform Module (TPM) supporting TPM 2.0 enables advanced cryptographic functionality, such as digital signatures and remote attestation.
- Administrator and power-on passwords help protect from unauthorized access to the server.
- Supports AMD Secure Root-of-Trust, Secure Run and Secure Move features to minimize potential attacks and protect data as the OS is booted, as applications are run and as applications are migrated from server to server.
- Supports Secure Boot to ensure only a digitally signed operating system can be used.
- Industry-standard Advanced Encryption Standard (AES) NI support for faster, stronger encryption.
- Additional physical security features are a chassis intrusion switch (standard in all models) and a lockable front bezel (optional).

Energy efficiency

The SR665 offers the following energy-efficiency features to save energy, reduce operational costs, and increase energy availability:

- Energy-efficient planar components help lower operational costs.
- High-efficiency power supplies with 80 PLUS Platinum and Titanium certifications
- Low-voltage 1.2 V DDR4 memory offers energy savings compared to 1.35 V and 1.5 V DDR3 DIMMs.
- Solid-state drives (SSDs) consume as much as 80% less power than traditional spinning 2.5-inch HDDs.
- The server uses hexagonal ventilation holes, which can be grouped more densely than round holes, providing more efficient airflow through the system and thus keeping your system cooler.
- Optional Lenovo XClarity Energy Manager provides advanced data center power notification and analysis to help achieve lower heat output and reduced cooling needs.

Components and connectors

The following figure shows the front of the server.

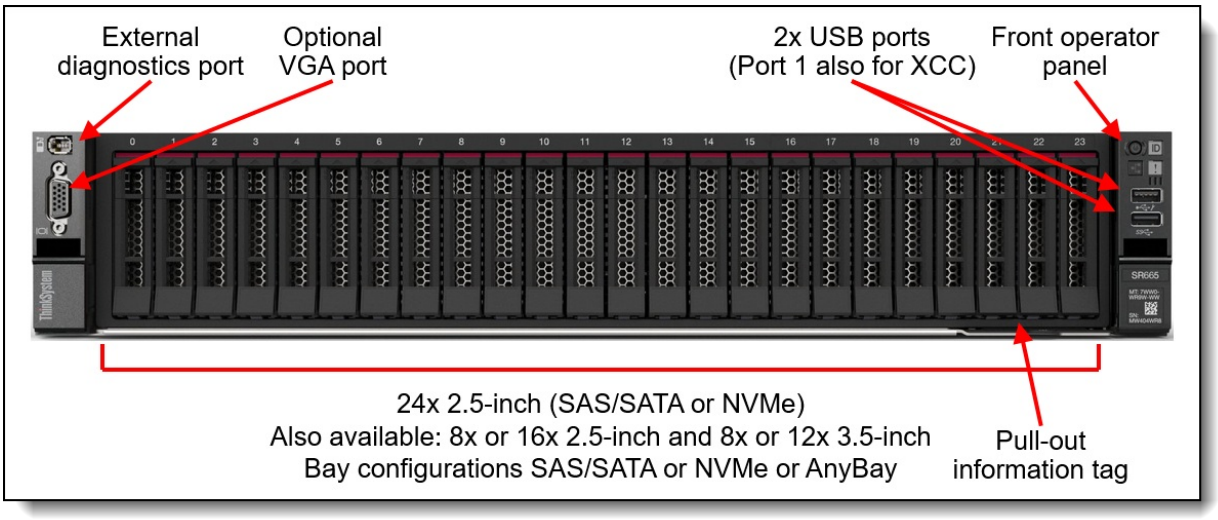

Figure 2. Front view of the Lenovo ThinkSystem SR665

The following figure shows the components visible from the rear of the server. The figure shows one configuration, with eight PCIe slots, however there are additional rear configurations which include 3.5-inch drive bays, 2.5-inch drive bays, or 7mm drive bays.

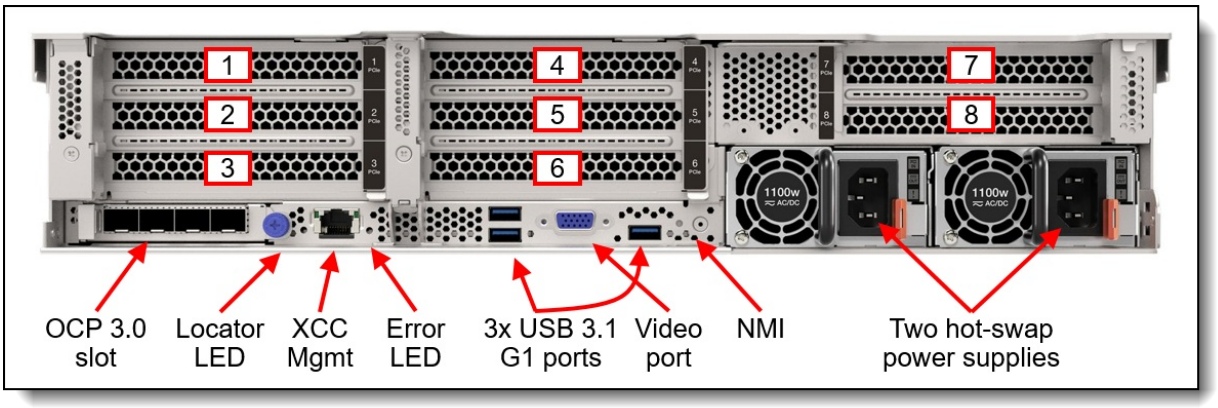

Figure 3. Rear view of the Lenovo ThinkSystem SR665 (configuration with eight PCIe slots)

The following figure shows the locations of key components inside the server.

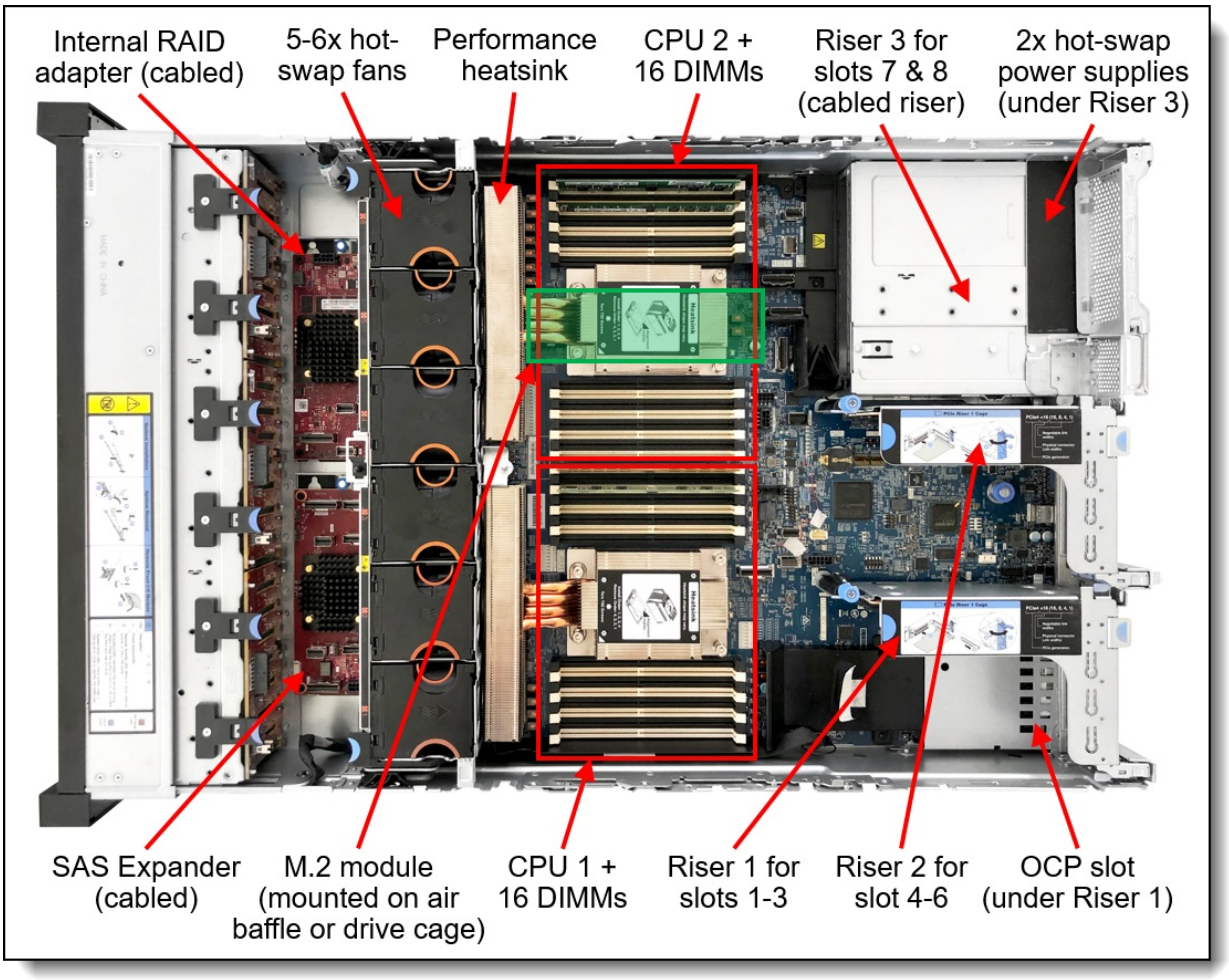

Figure 4. Internal view of the Lenovo ThinkSystem SR665

System architecture

The following figure shows the architectural block diagram of the SR665, showing the major components and their connections.

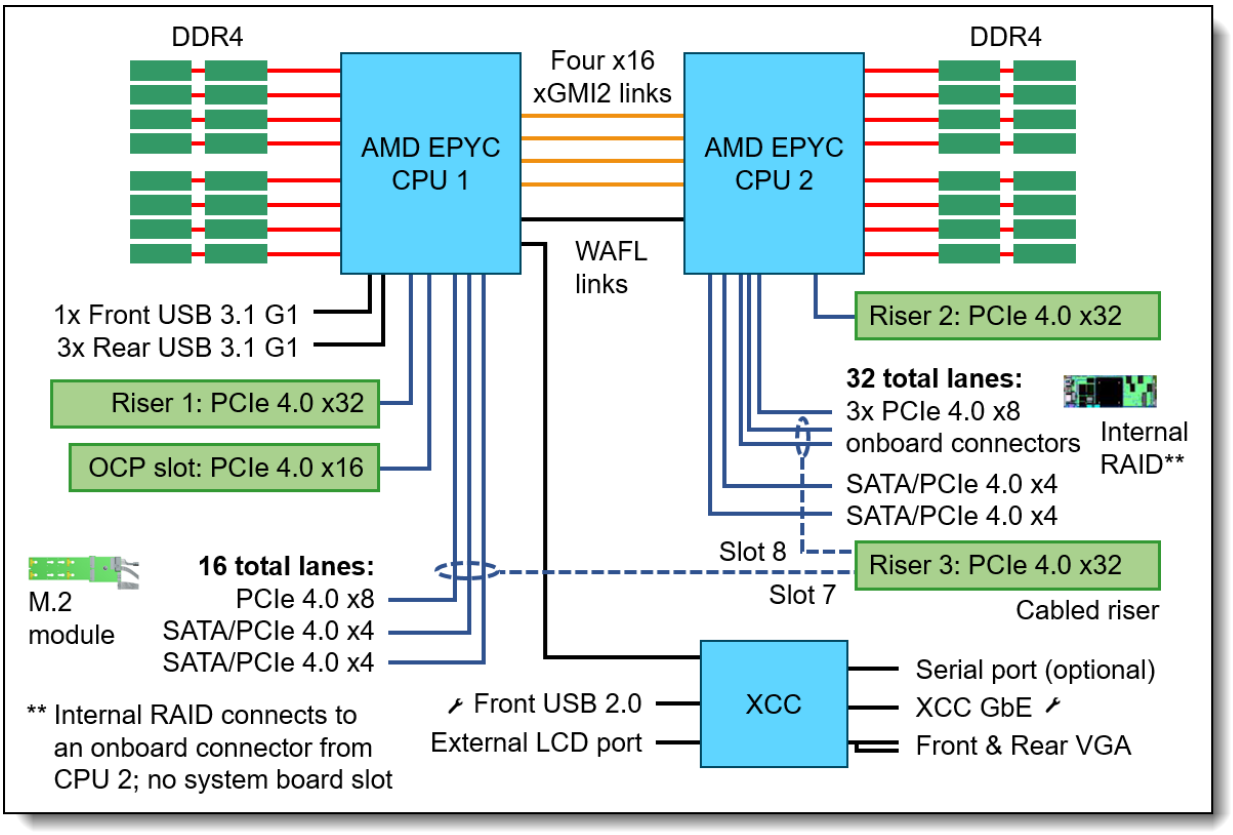

Figure 5. SR665 system architectural block diagram

Standard specifications

The following table lists the standard specifications.

Table 1. Standard specifications

Components	Specification
Machine types	7D2W - 1 year warranty 7D2V - 3 year warranty
Form factor	2U rack.
Processor	One or two AMD EPYC 7002 Series processors (formerly codenamed "Rome") or AMD EPYC 7003 Series processors (formerly codenamed "Milan"). Supports processors up to 64 cores, core speeds of up to 4.1 GHz, and TDP ratings of up to 280W.
Chipset	Not applicable (platform controller hub functions are integrated into the processor)

Components	Specification
Memory	32 DIMM slots with two processors (16 DIMM slots per processor). Each processor has 8 memory channels, with 2 DIMMs per channel (DPC). Lenovo TruDDR4 RDIMMs and 3DS RDIMMs are supported: • Performance+ RDIMMs: 1 DPC at 3200 MHz, 2 DPC at 3200 MHz • RDIMMs: 1 DPC at 3200 MHz, 2 DPC at 2933 MHz • 3DS RDIMMs: 1 DPC at 2933 MHz, 2 DPC at 2666 MHz
Memory maximum	Up to 8TB with 32x 256GB 3DS RDIMMs
Persistent memory	Not supported.
Memory protection	ECC, SDDC, Patrol/Demand Scrubbing, DRAM Address Command Parity with Replay, DRAM Uncorrected ECC Error Retry, Post Package Repair
Disk drive bays	Up to 20x 3.5-inch or 40x 2.5-inch hot-swap drive bays: • Front bays can be 3.5-inch (8 or 12 bays) or 2.5-inch (8, 16 or 24 bays) • Middle bays can be 3.5-inch (4 bays) or 2.5-inch (8 bays) • Rear bays can be 3.5-inch (2 or 4 bays) or 2.5-inch (4 or 8 bays) • Combinations of SAS/SATA, NVMe, or AnyBay (supporting SAS, SATA or NVMe) are available The server also supports these drives for OS boot or drive storage: • Two 7mm drives at the rear of the server (in addition to any 2.5-inch or 3.5-inch drive bays) • Internal M.2 module supporting up to two M.2 drives See Supported drive bay combinations for details.

Maximum internal storage	• 2.5-inch drives:
	  ◦ 614.4TB using 40x 15.36TB 2.5-inch SAS/SATA SSDs
	  ◦ 491.52TB using 32x 15.36TB 2.5-inch NVMe SSDs
	  ◦ 96TB using 40x 2.4TB 2.5-inch HDDs
	• 3.5-inch drives:
	  ◦ 360TB using 20x 18TB 3.5-inch HDDs
	  ◦ 153.6TB using 20x 7.68TB 3.5-inch SAS/SATA SSDs
	  ◦ 76.8TB using 12x 6.4TB 3.5-inch NVMe SSDs

Storage controller	• Onboard NVMe and NVMe Switch Adapters (no RAID)
	• Onboard SATA (no RAID)
	• 12 Gb SAS/SATA RAID adapters:
	  ◦ RAID 530i-8i (cacheless) supports RAID 0, 1, 10, 5, 50
	  ◦ RAID 530i-16i (cacheless) supports RAID 0, 1, 10
	  ◦ RAID 930-8i with 2GB flash-backed cache supports RAID 0, 1, 10, 5, 50, 6, 60
	  ◦ RAID 930-16i with 4GB flash-backed cache supports RAID 0, 1, 10, 5, 50, 6, 60
	  ◦ RAID 940-8i with 4GB or 8GB flash-backed cache supports RAID 0, 1, 10, 5, 50, 6, 60
	  ◦ RAID 940-16i with 4GB or 8GB flash-backed cache supports RAID 0, 1, 10, 5, 50, 6, 60
	  ◦ RAID 940-32i with 8GB flash-backed cache supports RAID 0, 1, 10, 5, 50, 6, 60
	• 12 Gb SAS/SATA non-RAID:
	  ◦ 430-8i or 440-8i HBAs
	  ◦ 430-16i or 440-16i HBAs

Components	Specification
Optical drive bays	No internal optical drive.
Tape drive bays	No internal backup drive.
Network interfaces	Dedicated OCP 3.0 SFF slot with PCIe 4.0 x16 host interface. Supports a variety of 2-port and 4-port adapters with 1GbE, 10GbE and 25GbE network connectivity. One port can optionally be shared with the XClarity Controller (XCC) management processor for Wake-on-LAN and NC-SI support.
PCI Expansion slots	Up to 8x PCIe 4.0 slots, all full height slots and with rear access, plus a slot dedicated to the OCP adapter. Slot availability is based on riser selection and rear drive bay selection. Slots 4-8 require two processors. Slots are configured using three riser cards. Riser 1 (slots 1-3) and Riser 2 (slots 4-6) are installed in slots in the system board, Riser 3 (slots 7-8) is cabled to ports on the system board. A variety of riser cards are available. See thel/O expansion for details. For 2.5-inch front drive configurations, the server supports the installation of a RAID adapter or HBA in a dedicated area that does not consume any of the PCIe slots.
Ports	Front: 1x USB 3.1 G1 (5 Gb/s) port, 1x USB 2.0 port (also for XCC local management), External diagnostics port, optional VGA port. Rear: 3x USB 3.1 G1 (5 Gb/s) ports, 1x VGA video port, 1x RJ-45 1GbE systems management port for XCC remote management. Optional DB-9 COM serial port (installs in slot 3). Internal: 1x USB 3.1 G1 connector for operating system or license key purposes
Cooling	Up to 6x N+1 redundant hot swap 60 mm fans, configuration dependent. One fan integrated in each power supply.
Power supply	Up to two hot-swap redundant AC power supplies, 80 PLUS Platinum or 80 PLUS Titanium certification. 500 W, 750 W, 1100 W and 1800 W AC options, supporting 220 V AC. 500 W, 750 W and 1100 W options also support 110V input supply. In China only, all power supply options support 240 V DC. Also available is a 1100W power supply with a -48V DC input.
Video	G200 graphics with 16 MB memory with 2D hardware accelerator, integrated into the XClarity Controller. Maximum resolution is 1920x1200 32bpp at 60Hz.
Hot-swap parts	Drives, power supplies, and fans.
Systems management	Operator panel with status LEDs. Optional External Diagnostics Handset with LCD display. Models with 8x or 16x 2.5-inch front drive bays can optionally support an Integrated Diagnostics Panel. XClarity Controller (XCC) embedded management, XClarity Administrator centralized infrastructure delivery, XClarity Integrator plugins, and XClarity Energy Manager centralized server power management. Optional XClarity Controller Advanced and Enterprise to enable remote control functions.
Security features	Chassis intrusion switch, Power-on password, administrator's password, Trusted Platform Module (TPM), supporting TPM 2.0. Servers with EPYC 7002 processors also support TPM 1.2. In China only, optional Nationz TPM 2.0. Optional lockable front security bezel.
Operating systems supported	Microsoft Windows Server, Red Hat Enterprise Linux, SUSE Linux Enterprise Server, VMware ESXi. See the Operating system support section for specifics.
Limited warranty	Three-year or one-year (model dependent) customer-replaceable unit and onsite limited warranty with 9x5 next business day (NBD).

Components	Specification
Service and support	Optional service upgrades are available through Lenovo Services: 4-hour or 2-hour response time, 6-hour fix time, 1-year or 2-year warranty extension, software support for Lenovo hardware and some third-party applications.
Dimensions	Width: 445 mm (17.5 in.), height: 87 mm (3.4 in.), depth: 764 mm (30.1 in.). See Physical and electrical specifications for details.
Weight	Maximum: 38.8 kg (85.5 lb)

Models

ThinkSystem SR665 models can be configured by using the Lenovo Data Center Solution Configurator (DCSC).

Configure-to-order (CTO) models are used to create models with factory-integrated server customizations. For CTO models, two base CTO models are available for the SR665 as listed in the following table, CTO1WW and CTOLWW:

- The CTO1WW base CTO model is for general business and is selectable by choosing **General Purpose** mode in DCSC.
- The CTOLWW base model is intended for High Performance Computing (HPC) and Artificial Intelligence (AI) configurations and solutions, including configurations for Lenovo Scalable Infrastructure (LeSI), and is enabled using either the **HPC & AI LeSI Solutions** mode or **HPC & AI ThinkSystem Hardware** mode in DCSC. CTOLWW configurations can also be built using System x and Cluster Solutions Configurator (x-config).

Preconfigured server models may also be available for the SR665, however these are region-specific; that is, each region may define their own server models, and not all server models are available in every region.

The following table lists the base CTO models of the ThinkSystem SR665 server.

Table 2. Base CTO models

Description	Machine Type/Model General purpose	Machine Type/Model for HPC and AI
ThinkSystem SR665 - 3 year Warranty	7D2VCTO1WW	7D2VCTOLWW
ThinkSystem SR665 - 1 year Warranty	7D2WCTO1WW	7D2WCTOLWW

Models of the SR665 are defined based on whether the server has 2.5-inch drive bays at the front (called the 2.5-inch chassis) or whether it has 3.5-inch drive bays at the front (called the 3.5-inch chassis). For models, the feature codes for these chassis bases are as listed in the following table.

Table 3. Chassis base feature codes

Feature code	Description
B8LZ	ThinkSystem 2U 2.5" Chassis with 8, 16 or 24 Bays
B8M0	ThinkSystem 2U 3.5" Chassis with 8 or 12 Bays

There are two system boards for the SR665, which will be derived by the configurator based on the selection of processor and whether the configuration includes the NVIDIA A100.

Table 4. Motherboard feature codes (CTO orders)

Feature code	Description
B8L1	ThinkSystem SR665 MB
BF6Z	ThinkSystem SR665 2U Refresh MB (required for EPYC 7003 processors and NVIDIA A100 GPU)

The following tables list the available models, grouped by region.

- Models for Australia and New Zealand
- Models for South East Asian countries (ASEAN)
- Models for Brazil
- Models for EMEA countries
- Models for Hong Kong, Taiwan, Korea (HTK)
- Models for India
- Models for Japan
- Models for Latin American countries (except Brazil)
- Models for USA and Canada

Refer to the Specifications section for information about standard features of the server.

Common to all models:

- All models indicated as having the 750W power supply are using the Platinum power supply.

Models for Australia and New Zealand

Table 5. Models for Australia and New Zealand

Model	AMD EPYC processor†	Memory	RAID	Drive bays	OCP	Slots	Power supply	Front VGA	XCC	Fans	Rail kit
Standard models with a 3-year warranty (machine type 7D2V)											
Standard models with second-generation AMD EPYC processors											
7D2VA01TAU	1x 7252 8C 120W 3.1G	1x 16GB	930-8i	8x 2.5" SAS Open bay	4x1Gb 5719	3 (x16, x8, x8) Gen4	1x 750W	Yes	Std	5x Std	Slide
7D2VA02EAU	1x 7252 8C 120W 3.1G	1x 16GB	930-8i	8x 2.5" SAS Open bay	4x1Gb 5719	3 (x16, x8, x8) Gen4	1x 750W	Yes	Std	5x Std	Slide
7D2VA02KAU	1x 7252 8C 120W 3.1G	1x 16GB	930-8i	8x 3.5" SAS Open bay	4x1Gb 5719	3 (x16, x8, x8) Gen4	1x 750W	Yes	Std	5x Std	Slide
7D2VA01VAU	1x 7272 12C 120W 2.6G	1x 16GB	930-8i	8x 2.5" SAS Open bay	4x1Gb 5719	3 (x16, x8, x8) Gen4	1x 750W	Yes	Std	5x Std	Slide
7D2VA029AU	1x 7272 12C 120W 2.6G	1x 16GB	930-8i	8x 3.5" SAS Open bay	4x1Gb 5719	3 (x16, x8, x8) Gen4	1x 750W	Yes	Std	5x Std	Slide
7D2VA02BAU	1x 7272 12C 120W 2.6G	1x 16GB	930-8i	8x 2.5" SAS Open bay	4x1Gb 5719	3 (x16, x8, x8) Gen4	1x 750W	Yes	Std	5x Std	Slide
7D2VA01RAU	1x 7282 16C 120W 2.4G	1x 16GB	930-8i	8x 2.5" SAS Open bay	4x1Gb 5719	3 (x16, x8, x8) Gen4	1x 750W	Yes	Std	5x Std	Slide
7D2VA01XAU	1x 7282 16C 120W 2.4G	1x 16GB	930-8i	8x 2.5" SAS Open bay	4x1Gb 5719	3 (x16, x8, x8) Gen4	1x 750W	Yes	Std	5x Std	Slide
7D2VA01ZAU	1x 7282 16C 120W 2.4G	1x 16GB	930-8i	8x 3.5" SAS Open bay	4x1Gb 5719	3 (x16, x8, x8) Gen4	1x 750W	Yes	Std	5x Std	Slide
7D2VA01PAU	1x 7352 24C 155W 2.3G	1x 16GB	930-8i	8x 3.5" SAS Open bay	4x1Gb 5719	3 (x16, x8, x8) Gen4	1x 750W	Yes	Std	5x Perf	Slide
7D2VA027AU	1x 7352 24C 155W 2.3G	1x 16GB	930-8i	8x 2.5" SAS Open bay	4x1Gb 5719	3 (x16, x8, x8) Gen4	1x 750W	Yes	Std	5x Perf	Slide

Model	AMD EPYC processor†	Memory	RAID	Drive bays	OCP	Slots	Power supply	Front VGA	XCC	Fans	Rail kit
7D2VA02HAU	1x 7352 24C 155W 2.3G	1x 16GB	930-8i	8x 2.5" SAS Open bay	4x1Gb 5719	3 (x16, x8, x8) Gen4	1x 750W	Yes	Std	5x Perf	Slide
TopSeller models with a 3-year warranty (machine type 7D2V)											
TopSeller models with third-generation AMD EPYC processors											
7D2VA04DAU	1x 7313 16C 155W 3.0G	1x 32GB	Option	8x 2.5" SAS Open bay	Open	3 (x16, x8, x8) Gen4	1x 750W	Yes	Ent	5x Std	Slide
TopSeller models with second-generation AMD EPYC processors											
7D2VA02TAU	1x 7252 8C 120W 3.1G	1x 16GB	Option	Option 2.5" Open bay	Open	Open	1x 750W	Yes	Std	5x Perf	Option
7D2VA02ZAU	1x 7252 8C 120W 3.1G	1x 16GB	530-8i	8x 2.5" SAS Open bay	Open	3 (x16, x8, x8) Gen4	1x 750W	Yes	Std	5x Perf	Fric
7D2VA030AU	1x 7252 8C 120W 3.1G	1x 32GB	Option	Option 2.5" Open bay	Open	Open	1x 750W	Yes	Std	5x Perf	Option
7D2VA03WAU	1x 7252 8C 120W 3.1G	1x 16GB	Option	Option 2.5" Open bay	Open	Open	1x 750W	Yes	Std	5x Perf	Slide
7D2VA02YAU	1x 7262 8C 155W 3.2G	1x 32GB	940-8i 4GB	8x 2.5" SAS Open bay	Open	3 (x16, x8, x8) Gen4	1x 750W	Yes	Std	5x Perf	Fric
7D2VA031AU	1x 7262 8C 155W 3.2G	1x 32GB	Option	Option 2.5" Open bay	Open	Open	1x 750W	Yes	Std	5x Perf	Option
7D2VA02XAU	1x 7282 16C 120W 2.4G	1x 32GB	940-8i 4GB	8x 2.5" SAS Open bay	Open	3 (x16, x8, x8) Gen4	1x 750W	Yes	Std	5x Perf	Fric
7D2VA032AU	1x 7282 16C 120W 2.4G	1x 32GB	Option	Option 2.5" Open bay	Open	Open	1x 750W	Yes	Std	5x Perf	Option
7D2VA03XAU	1x 7282 16C 120W 2.4G	1x 32GB	Option	Option 2.5" Open bay	Open	Open	1x 750W	Yes	Std	5x Perf	Slide
7D2VA02WAU	1x 7302 16C 155W 3.0G	1x 32GB	940-8i 4GB	8x 2.5" SAS Open bay	Open	3 (x16, x8, x8) Gen4	1x 750W	Yes	Std	5x Perf	Fric
7D2VA033AU	1x 7302 16C 155W 3.0G	1x 32GB	Option	Option 2.5" Open bay	Open	Open	1x 750W	Yes	Std	5x Perf	Option
7D2VA02UAU	1x 7402 24C 180W 2.8G	1x 32GB	940-8i 4GB	8x 2.5" SAS Open bay	Open	3 (x16, x8, x8) Gen4	1x 750W	Yes	Std	5x Perf	Fric
7D2VA02VAU	1x 7402 24C 180W 2.8G	1x 32GB	Option	Option 2.5" Open bay	Open	Open	1x 750W	Yes	Std	5x Perf	Option

† Processor description: AMD EPYC model, number of cores, thermal design power (TDP), core frequency

Models for South East Asian countries (ASEAN)

Table 6. Models for South East Asian countries (ASEAN)

Model	AMD EPYC processor†	Memory	RAID	Drive bays	OCP	Slots	Power supply	Front VGA	XCC	Fans	Rail kit
Standard models with a 3-year warranty (machine type 7D2V)											
Standard models with second-generation AMD EPYC processors											
7D2VA025SG	1x 7252 8C 120W 3.1G	1x 16GB	930-8i	8x 2.5" SAS Open bay	4x1Gb 5719	3 (x16, x8, x8) Gen4	1x 750W	Yes	Std	5x Std	Slide
7D2VA02GSG	1x 7252 8C 120W 3.1G	1x 16GB	930-8i	8x 3.5" SAS Open bay	4x1Gb 5719	3 (x16, x8, x8) Gen4	1x 750W	Yes	Std	5x Std	Slide
7D2VA023SG	1x 7272 12C 120W 2.6G	1x 16GB	930-8i	8x 3.5" SAS Open bay	4x1Gb 5719	3 (x16, x8, x8) Gen4	1x 750W	Yes	Std	5x Std	Slide
7D2VA028SG	1x 7272 12C 120W 2.6G	1x 16GB	930-8i	8x 2.5" SAS Open bay	4x1Gb 5719	3 (x16, x8, x8) Gen4	1x 750W	Yes	Std	5x Std	Slide
7D2VA021SG	1x 7282 16C 120W 2.4G	1x 16GB	930-8i	8x 2.5" SAS Open bay	4x1Gb 5719	3 (x16, x8, x8) Gen4	1x 750W	Yes	Std	5x Std	Slide
7D2VA02ASG	1x 7282 16C 120W 2.4G	1x 16GB	930-8i	8x 3.5" SAS Open bay	4x1Gb 5719	3 (x16, x8, x8) Gen4	1x 750W	Yes	Std	5x Std	Slide
7D2VA01YSG	1x 7352 24C 155W 2.3G	1x 16GB	930-8i	8x 3.5" SAS Open bay	4x1Gb 5719	3 (x16, x8, x8) Gen4	1x 750W	Yes	Std	5x Perf	Slide
7D2VA02FSG	1x 7352 24C 155W 2.3G	1x 16GB	930-8i	8x 2.5" SAS Open bay	4x1Gb 5719	3 (x16, x8, x8) Gen4	1x 750W	Yes	Std	5x Perf	Slide

† Processor description: AMD EPYC model, number of cores, thermal design power (TDP), core frequency

Models for Brazil

Table 7. Models for Brazil

Model	AMD EPYC processor†	Memory	RAID	Drive bays	OCP	Slots	Power supply	Front VGA	XCC	Fans	Rail kit
TopSeller models with a 3-year warranty (machine type 7D2V)											
Models with third-generation AMD EPYC processors											
7D2VA058BR	1x 7313 16C 155W 3.0G	1x 32GB	930-16i 4GB	8x 2.5" SAS Open bay	2x10GbT 57416	3 (x16, x8, x8) Gen4	2x 750W	Opt	Ent	5x Perf	Slide
7D2VA05BBR	1x 7413 24C 180W 2.65G	2x 32GB	930-16i 4GB	16x 2.5" SAS Open bay	4x25Gb 57454	3 (x16, x8, x8) Gen4	2x 1100W	Opt	Ent	5x Perf	Slide
Models with second-generation AMD EPYC processors											
7D2VA059BR	1x 7252 8C 120W 3.1G	1x 32GB	940-8i 4GB	8x 2.5" SAS Open bay	4x1Gb 5719	3 (x16, x8, x8) Gen4	2x 750W	Opt	Ent	5x Perf	Slide

† Processor description: AMD EPYC model, number of cores, thermal design power (TDP), core frequency

Models for EMEA countries

Table 8. Models for EMEA countries

Model	AMD EPYC processor†	Memory	RAID	Drive bays	OCP	Slots	Power supply	Front VGA	XCC	Fans	Rail kit
Standard models with a 3-year warranty (machine type 7D2V)											
Standard models with third-generation AMD EPYC processors											
7D2VA043EA	1x 7313 16C 155W 3.0G	1x 32GB	930-8i	8x 2.5" SAS Open bay	Open	3 (x16, x8, x8) Gen4	1x 750W	Opt	Ent	5x Perf	Slide
7D2VA044EA	1x 7313 16C 155W 3.0G	1x 32GB	940-8i 4GB	8x 2.5" SAS Open bay	Open	3 (x16, x8, x8) Gen4	1x 750W	Opt	Ent	5x Perf	Slide
7D2VA04GEA	1x 7313 16C 155W 3.0G	1x 32GB	940-8i 4GB	8x 2.5" SAS Open bay	Open	3 (x16, x8, x8) Gen4	1x 750W	Opt	Ent	5x Perf	Slide
7D2VA05GEA	1x 7313 16C 155W 3.0G	1x 32GB	9350-8i	8x 2.5" SAS Open bay	Open	3 (x16, x8, x8) Gen4	1x 750W	Opt	Ent	5x Perf	Slide
7D2VA04MEA	1x 7343 16C 190W 3.2G	1x 32GB	940-8i 4GB	8x 2.5" SAS Open bay	Open	3 (x16, x8, x8) Gen4	1x 750W	Opt	Ent	5x Perf	Slide
7D2VA05FEA	1x 7343 16C 190W 3.2G	1x 32GB	9350-8i	8x 2.5" SAS Open bay	Open	3 (x16, x8, x8) Gen4	1x 750W	Opt	Ent	5x Perf	Slide
7D2VA045EA	1x 7453 28C 225W 2.8G	1x 32GB	940-8i 4GB	8x 2.5" SAS Open bay	Open	3 (x16, x8, x8) Gen4	1x 750W	Opt	Ent	5x Perf	Slide
7D2VA04LEA	1x 7453 28C 225W 2.8G	1x 32GB	940-8i 4GB	8x 2.5" SAS Open bay	Open	3 (x16, x8, x8) Gen4	1x 1100W	Opt	Ent	5x Perf	Slide
7D2VA05HEA	1x 7453 28C 225W 2.8G	1x 32GB	9350-8i	8x 2.5" SAS Open bay	Open	3 (x16, x8, x8) Gen4	1x 1100W	Opt	Ent	5x Perf	Slide
7D2VA046EA	1x 7513 32C 200W 2.6G	1x 32GB	940-8i 4GB	8x 2.5" SAS Open bay	Open	3 (x16, x8, x8) Gen4	1x 750W	Opt	Ent	5x Perf	Slide
7D2VA04KEA	1x 7513 32C 200W 2.6G	1x 32GB	940-8i 4GB	8x 2.5" SAS Open bay	Open	3 (x16, x8, x8) Gen4	1x 1100W	Opt	Ent	5x Perf	Slide
7D2VA05EEA	1x 7513 32C 200W 2.6G	1x 32GB	9350-8i	8x 2.5" SAS Open bay	Open	3 (x16, x8, x8) Gen4	1x 1100W	Opt	Ent	5x Perf	Slide
7D2VA04JEA	1x 7713 64C 225W 2.0G	1x 32GB	940-8i 4GB	8x 2.5" SAS Open bay	Open	3 (x16, x8, x8) Gen4	1x 1100W	Opt	Ent	5x Perf	Slide
7D2VA05DEA	1x 7713 64C 225W 2.0G	1x 32GB	9350-8i	8x 2.5" SAS Open bay	Open	3 (x16, x8, x8) Gen4	1x 1100W	Opt	Ent	5x Perf	Slide
7D2VA04HEA	1x 7763 64C 280W 2.45G	1x 32GB	940-8i 4GB	8x 2.5" SAS Open bay	Open	3 (x16, x8, x8) Gen4	1x 1800W	Opt	Ent	5x Perf	Slide
7D2VA05CEA	1x 7763 64C 280W 2.45G	1x 32GB	9350-8i	8x 2.5" SAS Open bay	Open	3 (x16, x8, x8) Gen4	1x 1100W	Opt	Ent	5x Perf	Slide
Standard models with second-generation AMD EPYC processors											
7D2VA01KEA	1x 7262 8C 155W 3.2G	1x 32GB	940-8i 4GB	8x 2.5" SAS Open bay	Open	3 (x16, x8, x8) Gen4	1x 750W	Opt	Ent	5x Perf	Slide
7D2VA01LEA	1x 7302 16C 155W 3.0G	1x 32GB	940-8i 4GB	8x 2.5" SAS Open bay	Open	3 (x16, x8, x8) Gen4	1x 750W	Opt	Ent	5x Perf	Slide
7D2VA039EA	1x 7352 24C 155W 2.3G	2x 32GB	940-8i 4GB	8x 2.5" SAS Open bay	2x25Gb 57414	3 (x16, x8, x8) Gen4	1x 750W	Opt	Ent	5x Perf	Slide
7D2VA03AEA	1x 7352 24C 155W 2.3G	1x 32GB	940-8i 4GB	8x 2.5" SAS Open bay	Open	3 (x16, x8, x8) Gen4	1x 750W	Opt	Ent	5x Perf	Slide
7D2VA03BEA	1x 7402 24C 180W 2.8G	1x 32GB	940-8i 4GB	8x 2.5" SAS Open bay	Open	3 (x16, x8, x8) Gen4	1x 750W	Opt	Ent	5x Perf	Slide
7D2VA03CEA	1x 7452 32C 155W 2.35G	1x 32GB	940-8i 4GB	8x 2.5" SAS Open bay	Open	3 (x16, x8, x8) Gen4	1x 750W	Opt	Ent	5x Perf	Slide

† Processor description: AMD EPYC model, number of cores, thermal design power (TDP), core frequency

Models for Hong Kong, Taiwan, Korea (HTK)

Table 9. Models for Hong Kong, Taiwan, Korea (HTK)

Model	AMD EPYC processor†	Memory	RAID	Drive bays	OCP	Slots	Power supply	Front VGA	XCC	Fans	Rail kit
Standard models with a 3-year warranty (machine type 7D2V)											
Standard models with second-generation AMD EPYC processors											
7D2VA01UCN	1x 7252 8C 120W 3.1G	1x 16GB	930-8i	8x 3.5" SAS Open bay	4x1Gb 5719	3 (x16, x8, x8) Gen4	1x 750W	Yes	Std	5x Std	Slide
7D2VA02QCN	1x 7252 8C 120W 3.1G	1x 16GB	930-8i	8x 2.5" SAS Open bay	4x1Gb 5719	3 (x16, x8, x8) Gen4	1x 750W	Yes	Std	5x Std	Slide
7D2VA02MCN	1x 7272 12C 120W 2.6G	1x 16GB	930-8i	8x 2.5" SAS Open bay	4x1Gb 5719	3 (x16, x8, x8) Gen4	1x 750W	Yes	Std	5x Std	Slide
7D2VA02NCN	1x 7272 12C 120W 2.6G	1x 16GB	930-8i	8x 3.5" SAS Open bay	4x1Gb 5719	3 (x16, x8, x8) Gen4	1x 750W	Yes	Std	5x Std	Slide
7D2VA02CCN	1x 7282 16C 120W 2.4G	1x 16GB	930-8i	8x 2.5" SAS Open bay	4x1Gb 5719	3 (x16, x8, x8) Gen4	1x 750W	Yes	Std	5x Std	Slide
7D2VA02LCN	1x 7282 16C 120W 2.4G	1x 16GB	930-8i	8x 3.5" SAS Open bay	4x1Gb 5719	3 (x16, x8, x8) Gen4	1x 750W	Yes	Std	5x Std	Slide
7D2VA01WCN	1x 7352 24C 155W 2.3G	1x 16GB	930-8i	8x 2.5" SAS Open bay	4x1Gb 5719	3 (x16, x8, x8) Gen4	1x 750W	Yes	Std	5x Perf	Slide
7D2VA022CN	1x 7352 24C 155W 2.3G	1x 16GB	930-8i	8x 3.5" SAS Open bay	4x1Gb 5719	3 (x16, x8, x8) Gen4	1x 750W	Yes	Std	5x Perf	Slide

† Processor description: AMD EPYC model, number of cores, thermal design power (TDP), core frequency

Models for India

Table 10. Models for India

Model	AMD EPYC processor†	Memory	RAID	Drive bays	OCP	Slots	Power supply	Front VGA	XCC	Fans	Rail kit
Standard models with a 3-year warranty (machine type 7D2V)											
Standard models with second-generation AMD EPYC processors											
7D2VA024SG	1x 7252 8C 120W 3.1G	1x 16GB	930-8i	8x 2.5" SAS Open bay	4x1Gb 5719	3 (x16, x8, x8) Gen4	1x 750W	Yes	Std	5x Std	Slide
7D2VA026SG	1x 7252 8C 120W 3.1G	1x 16GB	930-8i	8x 3.5" SAS Open bay	4x1Gb 5719	3 (x16, x8, x8) Gen4	1x 750W	Yes	Std	5x Std	Slide
7D2VA020SG	1x 7272 12C 120W 2.6G	1x 16GB	930-8i	8x 3.5" SAS Open bay	4x1Gb 5719	3 (x16, x8, x8) Gen4	1x 750W	Yes	Std	5x Std	Slide
7D2VA02PSG	1x 7272 12C 120W 2.6G	1x 16GB	930-8i	8x 2.5" SAS Open bay	4x1Gb 5719	3 (x16, x8, x8) Gen4	1x 750W	Yes	Std	5x Std	Slide
7D2VA02DSG	1x 7282 16C 120W 2.4G	1x 16GB	930-8i	8x 2.5" SAS Open bay	4x1Gb 5719	3 (x16, x8, x8) Gen4	1x 750W	Yes	Std	5x Std	Slide
7D2VA02JSG	1x 7282 16C 120W 2.4G	1x 16GB	930-8i	8x 3.5" SAS Open bay	4x1Gb 5719	3 (x16, x8, x8) Gen4	1x 750W	Yes	Std	5x Std	Slide
7D2VA01QSG	1x 7352 24C 155W 2.3G	1x 16GB	930-8i	8x 2.5" SAS Open bay	4x1Gb 5719	3 (x16, x8, x8) Gen4	1x 750W	Yes	Std	5x Perf	Slide
7D2VA01SSG	1x 7352 24C 155W 2.3G	1x 16GB	930-8i	8x 3.5" SAS Open bay	4x1Gb 5719	3 (x16, x8, x8) Gen4	1x 750W	Yes	Std	5x Perf	Slide
TopSeller models with a 3-year warranty (machine type 7D2V)											
TopSeller models with second-generation AMD EPYC processors											
7D2VA04ZSG	1x 7252 8C 120W 3.1G	1x 16GB	530-16i	12x 3.5" SAS Open bay	4x1Gb 5719	3 (x16, x8, x8) Gen3	1x 750W	Opt	Ent	5x Perf	Slide CMA
7D2VA04SSG	1x 7262 8C 155W 3.2G	1x 16GB	530-8i	8x 2.5" SAS Open bay	4x1Gb 5719	3 (x16, x8, x8) Gen3	1x 500W	Opt	Ent	5x Perf	Slide CMA
7D2VA04WSG	1x 7282 16C 120W 2.4G	1x 32GB	530-8i	8x 3.5" SAS Open bay	4x1Gb 5719	3 (x16, x8, x8) Gen3	1x 500W	Opt	Ent	5x Perf	Slide CMA
7D2VA04YSG	1x 7282 16C 120W 2.4G	1x 32GB	530-8i	8x 2.5" SAS Open bay	4x1Gb 5719	3 (x16, x8, x8) Gen3	1x 500W	Opt	Ent	5x Perf	Slide CMA
7D2VA053SG	1x 7532 32C 200W 2.4G	2x 32GB	930-8i	8x 3.5" SAS Open bay	4x1Gb 5719	3 (x16, x8, x8) Gen3	1x 750W	Opt	Ent	5x Perf	Slide CMA

† Processor description: AMD EPYC model, number of cores, thermal design power (TDP), core frequency

Models for Japan

Table 11. Models for Japan

Model	AMD EPYC processor†	Memory	RAID	Drive bays	OCP	Slots	Power supply	Front VGA	XCC	Fans	Rail kit
Standard models with a 3-year warranty (machine type 7D2V)											
Standard models with second-generation AMD EPYC processors											
7D2VA01FJP	1x 7252 8C 120W 3.1G	1x 16GB	940-8i 4GB	8x 2.5" SAS Open bay	2x25Gb CX4	3 (x16, x8, x8) Gen4	1x 750W	Opt	Adv	5x Std	Slide
TopSeller models with a 3-year warranty (machine type 7D2V)											
TopSeller models with second-generation AMD EPYC processors											
7D2VA015JP	1x 7F32 8C 180W 3.7G	1x 16GB	940-8i 4GB	8x 2.5" SAS Open bay	4x1Gb 5719	3 (x16, x8, x8) Gen4	1x 1100W	Opt	Adv	5x Std	Slide
7D2VA016JP	1x 7F52 16C 240W 3.5G	1x 16GB	940-8i 4GB	8x 2.5" SAS Open bay	4x1Gb 5719	3 (x16, x8, x8) Gen4	1x 1100W	Opt	Adv	5x Std	Slide
7D2VA01MJP	1x 7F72 24C 240W 3.2G	1x 16GB	940-8i 4GB	8x 2.5" SAS Open bay	4x1Gb 5719	3 (x16, x8, x8) Gen4	1x 1100W	Opt	Adv	5x Std	Slide
7D2VA01NJP	1x 7H12 64C 280W 2.6G	1x 16GB	940-8i 4GB	8x 2.5" SAS Open bay	4x1Gb 5719	3 (x16, x8, x8) Gen4	1x 1100W	Opt	Adv	5x Std	Slide

† Processor description: AMD EPYC model, number of cores, thermal design power (TDP), core frequency

Models for Latin American countries (except Brazil)

Table 12. Models with a 3-year warranty for Latin American countries (except Brazil)

Model	AMD EPYC processor†	Memory	RAID	Drive bays	OCP	Slots	Power supply	Front VGA	XCC	Fans	Rail kit
Standard models with a 3-year warranty (machine type 7D2V)											
Standard models with second-generation AMD EPYC processors											
7D2V1000LA	1x 7282 16C 120W 2.4G	1x 16GB	930-16i 4GB	8x 2.5" SAS Open bay	4x1Gb 5719	3 (x16, x8, x8) Gen4	1x 1100W	Yes	Std	5x Perf	Option
7D2V1001LA	1x 7532 32C 200W 2.4G	1x 32GB	930-16i 4GB	8x 2.5" SAS Open bay	4x1Gb 5719	3 (x16, x8, x8) Gen4	1x 1100W	Yes	Std	5x Perf	Option
TopSeller models with a 3-year warranty (machine type 7D2V)											
Standard models with third-generation AMD EPYC processors											
7D2VA056LA	1x 7313 16C 155W 3.0G	2x 32GB	930-16i 4GB	16x 2.5" SAS Open bay	4x1Gb 5719	3 (x16, x8, x8) Gen4	2x 750W	Opt	Ent	5x Perf	Slide
7D2VA05ALA	1x 7513 32C 200W 2.6G	4x 64GB	930-16i 4GB	16x 2.5" SAS Open bay	4x1Gb 5719	3 (x16, x8, x8) Gen4	2x 1100W	Opt	Ent	5x Perf	Slide
Standard models with second-generation AMD EPYC processors											
7D2VA057LA	1x 7252 8C 120W 3.1G	1x 32GB	930-16i 4GB	16x 2.5" SAS Open bay	4x1Gb 5719	3 (x16, x8, x8) Gen4	2x 750W	Opt	Ent	5x Perf	Slide

† Processor description: AMD EPYC model, number of cores, thermal design power (TDP), core frequency

Models for USA and Canada

Table 13. Models for USA and Canada

Model	AMD EPYC processor†	Memory	RAID	Drive bays	OCP	Slots	Power supply	Front VGA	XCC	Fans	Rail kit
Standard models with a 3-year warranty (machine type 7D2V)											
Standard models with second-generation AMD EPYC processors											
7D2VA04FNA	1x 7282 16C 120W 2.4G	1x 32GB	Option	Option 2.5" Open bay	Open	Open	1x 750W	Yes	Ent	5x Perf	Slide

† Processor description: AMD EPYC model, number of cores, thermal design power (TDP), core frequency

Processor options

The SR665 supports processors in the AMD EPYC family of processors. The server supports one or two processors.

Topics in this section:

- Processor options
- One-processor configurations

There are no restrictions in the configuration of the servers based on the TDP thermal value of the processor. The appropriate heatsink will be automatically selected based on the processor and configuration of the server.

Certain ambient temperature requirements may apply. See the Operating environment section for details.

In the SR665, processors either have a standard 1U heatsink, standard 2U heatsink, or a performance heatsink attached depending on the TDP of the processor and configuration of the server. Performance heatsinks include a large 2U-high copper radiator that connects to the main heatsink via heat pipes.

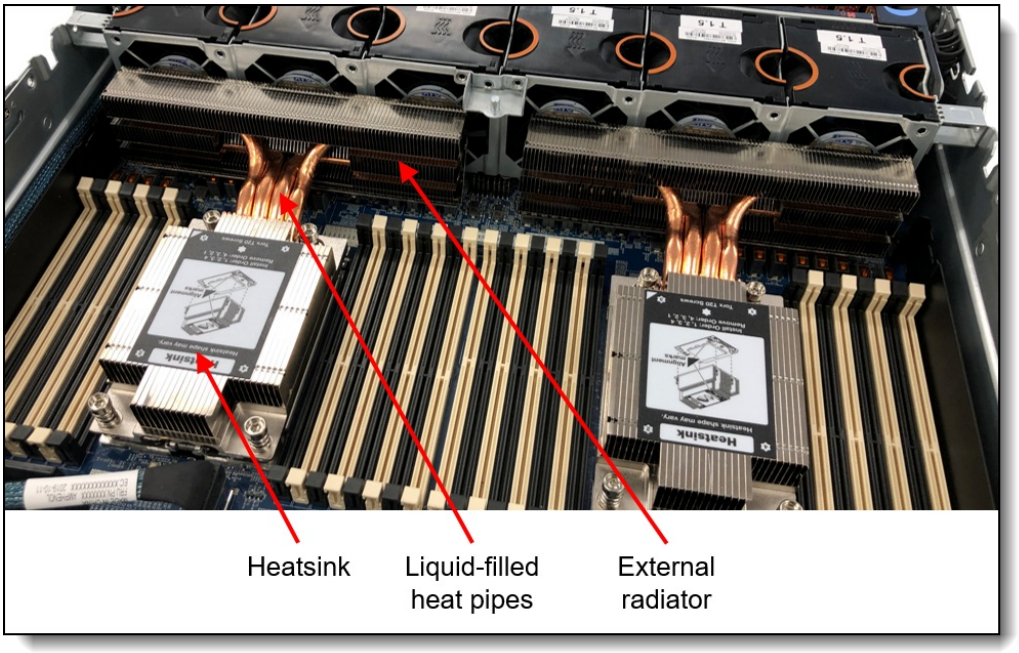

Figure 6. Performance heatsink

Processor options

The table below lists the AMD processors that are currently supported.

All supported processors have the following characteristics:

- Third and second-generation AMD EPYC processors (formerly codenamed "Milan" and "Rome" respectively)
- 7 nm process technology
- Eight DDR4 memory channels
- 128 PCIe 4.0 I/O lanes, 64 lanes available for PCIe and NVMe devices

Table 14. SR665 processor support

Part number	Feature code	Description	Quantity supported*
Third-generation AMD EPYC processors			
4XG7A63618	BF7H	ThinkSystem SR665 AMD EPYC 72F3 8C 180W 3.7GHz Processor w/o Fan	2
4XG7A63607	BF76	ThinkSystem SR665 AMD EPYC 7313 16C 155W 3.0GHz Processor w/o Fan	2
CTO only*	BF7B	ThinkSystem AMD EPYC 7313P 16C 155W 3.0GHz Processor	1
4XG7A63615	BF7E	ThinkSystem SR665 AMD EPYC 7343 16C 190W 3.2GHz Processor w/o Fan	2
4XG7A63614	BF7D	ThinkSystem SR665 AMD EPYC 73F3 16C 240W 3.5GHz Processor w/o Fan	2
4XG7A63609	BF78	ThinkSystem SR665 AMD EPYC 7413 24C 180W 2.65GHz Processor w/o Fan	2
4XG7A63603	BF72	ThinkSystem SR665 AMD EPYC 7443 24C 200W 2.85GHz Processor w/o Fan	2
CTO only*	BF79**	ThinkSystem AMD EPYC 7443P 24C 200W 2.85GHz Processor	1
4XG7A63605	BF74	ThinkSystem SR665 AMD EPYC 7453 28C 225W 2.8GHz Processor w/o Fan	2
4XG7A63617	BF7G	ThinkSystem SR665 AMD EPYC 74F3 24C 240W 3.2GHz Processor w/o Fan	2
4XG7A63611	BF7A	ThinkSystem SR665 AMD EPYC 7513 32C 200W 2.6GHz Processor w/o Fan	2
4XG7A63608	BF77	ThinkSystem SR665 AMD EPYC 7543 32C 225W 2.8GHz Processor w/o Fan	2
CTO only*	BF71	ThinkSystem AMD EPYC 7543P 32C 225W 2.8GHz Processor	1
4XG7A63616	BF7F	ThinkSystem SR665 AMD EPYC 75F3 32C 280W 2.95GHz Processor w/o Fan	2
4XG7A63620	BGQ5	ThinkSystem SR665 AMD EPYC 7643 48C 225W 2.3GHz Processor w/o Fan	2
4XG7A63606	BF75	ThinkSystem SR665 AMD EPYC 7663 56C 225W 2.0GHz Processor w/o Fan	2
4XG7A63613	BF7C	ThinkSystem SR665 AMD EPYC 7713 64C 225W 2.0GHz Processor w/o Fan	2
CTO only*	BF70	ThinkSystem AMD EPYC 7713P 64C 225W 2.0GHz Processor	1
4XG7A63604	BF73	ThinkSystem SR665 AMD EPYC 7763 64C 280W 2.45GHz Processor w/o Fan	2
Second-generation AMD EPYC processors			
CTO only*	B766	ThinkSystem AMD EPYC 7232P 8C 120W 3.1GHz Processor	1
4XG7A63366	B6VU	ThinkSystem SR665 AMD EPYC 7252 8C 120W 3.1GHz Processor w/o Fan	2
4XG7A63373	B6TS	ThinkSystem SR665 AMD EPYC 7262 8C 155W 3.2GHz Processor w/o Fan	2
4XG7A63381	BCE9	ThinkSystem SR665 AMD EPYC 7F32 8C 180W 3.7GHz Processor w/o Fan	2
4XG7A63377	B767	ThinkSystem SR665 AMD EPYC 7272 12C 120W 2.9GHz Processor w/o Fan	2
4XG7A63379	B6VZ	ThinkSystem SR665 AMD EPYC 7282 16C 120W 2.8GHz Processor w/o Fan	2
CTO only*	B6VV	ThinkSystem AMD EPYC 7302P 16C 155W 3.0GHz Processor	1
4XG7A38058	B6TV	ThinkSystem SR665 AMD EPYC 7302 16C 155W 3.0GHz Processor w/o Fan	2
4XG7A63380	BCE8	ThinkSystem SR665 AMD EPYC 7F52 16C 240W 3.5GHz Processor w/o Fan	2
4XG7A63374	B6W0	ThinkSystem SR665 AMD EPYC 7352 24C 155W 2.3GHz Processor w/o Fan	2
CTO only*	B6TT	ThinkSystem AMD EPYC 7402P 24C 180W 2.8GHz Processor	1
4XG7A63372	B6VW	ThinkSystem SR665 AMD EPYC 7402 24C 180W 2.8GHz Processor w/o Fan	2
4XG7A63382	BCEA	ThinkSystem SR665 AMD EPYC 7F72 24C 240W 3.2GHz Processor w/o Fan	2
4XG7A63378	B6TU	ThinkSystem SR665 AMD EPYC 7452 32C 155W 2.35GHz Processor w/o Fan	2
CTO only*	B6VX	ThinkSystem AMD EPYC 7502P 32C 180W 2.5GHz Processor	1
4XG7A38048	B5XG	ThinkSystem SR665 AMD EPYC 7502 32C 180W 2.5GHz Processor w/o Fan	2
4XG7A63375	BABP	ThinkSystem SR665 AMD EPYC 7532 32C 200W 2.4GHz Processor w/o Fan	2
4XG7A63370	B6W2	ThinkSystem SR665 AMD EPYC 7542 32C 225W 2.9GHz Processor w/o Fan	2
4XG7A63368	B6W1	ThinkSystem SR665 AMD EPYC 7552 48C 200W 2.2GHz Processor w/o Fan	2
4XG7A63376	B6W3	ThinkSystem SR665 AMD EPYC 7642 48C 225W 2.3GHz Processor w/o Fan	2
4XG7A63371	BABN	ThinkSystem SR665 AMD EPYC 7662 64C 225W 2.0GHz Processor w/o Fan	2
CTO only*	B6VY	ThinkSystem AMD EPYC 7702P 64C 200W 2.0GHz Processor	1

Part number	Feature code	Description	Quantity supported*
4XG7A63369	B6TR	ThinkSystem SR665 AMD EPYC 7702 64C 200W 2.0GHz Processor w/o Fan	2
4XG7A38059	B5XF	ThinkSystem SR665 AMD EPYC 7742 64C 225W 2.25GHz Processor w/o Fan	2
4XG7A63367	BAVP	ThinkSystem SR665 AMD EPYC 7H12 64C 280W 2.6GHz Processor w/o Fan	2

* Processors with a P suffix are single-socket capable processors and are only available in configure-to-order builds or in preconfigured models
** AMD EPYC 7443P has delayed availability. Please contact your Lenovo sales representative for more information.

The following table lists the features of the supported processors.

Table 15. Processor specifications

EPYC model**	Cores / Threads	Base Frequency	Max Boost Frequency†	L3 Cache	Memory channels	Memory bus	TDP
Third-generation AMD EPYC processors							
72F3	8 / 16	3.7 GHz	4.1 GHz	256 MB	8	3200 MHz	180 W
7313 / 7313P	16 / 32	3.0 GHz	3.7 GHz	128 MB	8	3200 MHz	155 W
7343	16 / 32	3.2 GHz	3.9 GHz	128 MB	8	3200 MHz	190 W
73F3	16/ 32	3.5 GHz	4.0 GHz	256 MB	8	3200 MHz	240 W
7413	24 / 48	2.65 GHz	3.6 GHz	128 MB	8	3200 MHz	180 W
7443 / 7443P	24 / 48	2.85 GHz	4.0 GHz	128 MB	8	3200 MHz	200 W
7453	28 / 56	2.75 GHz	3.45 GHz	64 MB	8	3200 MHz	225 W
74F3	24 / 48	3.2 GHz	4.0 GHz	256 MB	8	3200 MHz	240 W
7513	32 / 64	2.6 GHz	3.65 GHz	128 MB	8	3200 MHz	200 W
7543 / 7543P	32 / 64	2.8 GHz	3.7 GHz	256 MB	8	3200 MHz	225 W
75F3	32 / 64	2.95 GHz	4.0 GHz	256 MB	8	3200 MHz	280 W
7643	48 / 96	2.3 GHz	3.6 GHz	256 MB	8	3200 MHz	225 W
7663	56 / 112	2.0 GHz	3.5 GHz	256 MB	8	3200 MHz	225 W
7713 / 7713P	64 / 128	2.0 GHz	3.675 GHz	256 MB	8	3200 MHz	225 W
7763	64 / 128	2.45 GHz	3.5 GHz	256 MB	8	3200 MHz	280 W
Second-generation AMD EPYC processors							
7232P	8 / 16	3.1 GHz	3.2 GHz	32 MB	8	3200 MHz*	120 W
7252	8 / 16	3.1 GHz	3.2 GHz	64 MB	8	3200 MHz*	120 W
7262	8 / 16	3.2 GHz	3.4 GHz	128 MB	8	3200 MHz	155W
7F32	8 / 16	3.7 GHz	3.9 GHz	128 MB	8	3200 MHz	180W
7272	12 / 24	2.9 GHz	3.2 GHz	64 MB	8	3200 MHz*	120 W
7282	16 / 32	2.8 GHz	3.2 GHz	64 MB	8	3200 MHz*	120 W
7302 / 7302P	16 / 32	3.0 GHz	3.3 GHz	128 MB	8	3200 MHz	155 W
7F52	16 / 32	3.5 GHz	3.9 GHz	256 MB	8	3200 MHz	240W
7352	24 / 48	2.3 GHz	3.2 GHz	128 MB	8	3200 MHz	155 W
7402 / 7402P	24 / 48	2.8 GHz	3.35 GHz	128 MB	8	3200 MHz	180 W
7F72	24 / 48	3.2 GHz	3.7 GHz	192 MB	8	3200 MHz	240W
7452	32 / 64	2.35 GHz	3.35 GHz	128 MB	8	3200 MHz	155 W
7502 / 7502P	32 / 64	2.5 GHz	3.35 GHz	128 MB	8	3200 MHz	180 W

EPYC model**	Cores / Threads	Base Frequency	Max Boost Frequency†	L3 Cache	Memory channels	Memory bus	TDP
7532	32 / 64	2.4 GHz	3.3 GHz	256 MB	8	3200 MHz	200W
7542	32 / 64	2.9 GHz	3.4 GHz	128 MB	8	3200 MHz	225 W
7552	48 / 96	2.2 GHz	3.3 GHz	192 MB	8	3200 MHz	200 W
7642	48 / 96	2.3 GHz	3.3 GHz	256 MB	8	3200 MHz	225 W
7662	64 / 128	2.0 GHz	3.3 GHz	256 MB	8	3200 MHz	225W
7702 / 7702P	64 / 128	2.0 GHz	3.35 GHz	256 MB	8	3200 MHz	200 W
7742	64 / 128	2.25 GHz	3.4 GHz	256 MB	8	3200 MHz	225 W
7H12	64 / 128	2.6 GHz	3.3 GHz	256 MB	8	3200 MHz	280W

† The maximum single-core frequency at with the processor is capable of operating
* This processor supports 8 memory channels at 3200 MHz, however performance is optimized for 4 channels at 2666 MHz
** Processors with a P suffix are single-socket capable processors

One-processor configurations

The SR665 can be used with only one processor installed. Most core functions of the server (including the XClarity Controller) are connected to processor 1 as shown in the System architecture section.

With only one processor, the server has the following capabilities:

- 16 memory DIMMs for a 2TB maximum
- Slot 1-3 are available; Slot 4-8 are not available
- 8x onboard SATA ports
- 4x onboard NVMe ports

Drive support and controller support is as listed in the Controller selections section - see the rows for 1 processor installed in the tables. Drives in the mid-chassis drive bays (2.5-inch or 3.5-inch) are not supported in 1-processor configurations because power for the mid-chassis drive backplanes come from Riser 2 and the use of Riser 2 requires the second processor.

Memory options

The server uses Lenovo TruDDR4 memory operating at up to 3200 MHz. The processors have 8 memory channels and support 2 DIMMs per channel, for a total of 16 DIMMs. The server supports up to 8TB of memory using 32x 256GB 3DS RDIMMs and two processors.

The server supports memory speeds up to 3200 MHz, based on the memory type and the number of DIMMs installed per channel, as listed in the following table.

Table 16. Memory speeds supported

Memory type	1 DIMM per channel	2 DIMMs per channel
RDIMMs	3200 MHz	2933 MHz
3DS RDIMMs	2933 MHz	2666 MHz
Performance+ RDIMMs	3200 MHz	3200 MHz

The following table lists the memory options that are available for the server.

Lenovo TruDDR4 memory uses the highest quality components that are sourced from Tier 1 DRAM suppliers and only memory that meets the strict requirements of Lenovo is selected. It is compatibility tested and tuned to maximize performance and reliability. From a service and support standpoint, Lenovo TruDDR4 memory automatically assumes the system warranty, and Lenovo provides service and support worldwide.

Table 17. Memory options

Part number	Feature code	Description
RDIMMs (3200 MHz at 1 DPC, 2933 MHz at 2 DPC)		
4ZC7A15121	B5XD	ThinkSystem 16GB TruDDR4 3200MHz (2Rx8 1.2V) RDIMM-A
4ZC7A15122	B5XE	ThinkSystem 32GB TruDDR4 3200MHz (2Rx4 1.2V) RDIMM-A
4ZC7A15123	B8NU	ThinkSystem 32GB TruDDR4 3200MHz (2Rx8 1.2V) RDIMM-A
4ZC7A15124	B5XC	ThinkSystem 64GB TruDDR4 3200MHz (2Rx4 1.2V) RDIMM-A
3DS RDIMMs (2933 MHz at 1 DPC, 2666 MHz at 2 DPC)		
4ZC7A15125	B8NT	ThinkSystem 128GB TruDDR4 3200 MHz (4Rx4, 12.V) 3DS RDIMM-A
4ZC7A08727	B4Y3	ThinkSystem 256GB TruDDR4 2933MHz (8Rx4 1.2V) 3DS RDIMM
Performance+ RDIMMs (3200 MHz at 1 DPC and 2 DPC)		
4X77A12188	BCZY	ThinkSystem 32GB TruDDR4 Performance+ 3200 MHz (2Rx8 1.2V) RDIMM-A
4X77A12189	BCZZ	ThinkSystem 64GB TruDDR4 Performance+ 3200 MHz (2Rx4 1.2V) RDIMM-A

The following rules apply when selecting the memory configuration:

- The server supports RDIMMs and 3DS-RDIMMs.
- Mixing of RDIMMs and 3DS-RDIMMs is not supported.
- Mixing of Performance+ and non-Performance+ DIMMs is not supported
- Mixing x4 and x8 DIMMs is supported, but not in the same channel
- Mixing of DIMM rank counts is supported. Follow the required installation order installing the DIMMs with the higher rank counts first.
- Mixing of DIMM capacities is supported, however only two different capacities are supported across all channels of the processor (eg 32GB and 64GB). Follow the required installation order installing the larger DIMMs first.
- Memory mirroring and memory rank sparing are not supported.

For best performance, consider the following:

- Ensure the memory installed is at least the same speed as the memory bus of the selected processor.
- Populate memory DIMMs in quantities of 8 or 16, so that all memory channels are used.
- Populate memory channels so they all have the same total memory capacity.
- For more details on how to best configure the memory subsystem for performance, refer to the Lenovo Press paper “Balanced Memory Configurations with 2nd Gen and 3rd Gen AMD EPYC Processors” available from https://lenovopress.com/lp1268-balanced-memory-configurations-with-amd-epyc-processors

The following memory protection technologies are supported:

- ECC detection/correction
- SDDC (for x4-based memory DIMMs; look for "x4" in the DIMM description)
- Patrol/Demand Scrubbing
- DRAM Address Command Parity with Replay
- DRAM Uncorrected ECC Error Retry
- Post Package Repair

Internal storage

The SR665 has three drive bay zones and supports up to 20x 3.5-inch or 40x 2.5-inch hot-swap drive bays or a combination of drive bays, depending on the selected chassis and backplane configuration. The server also supports configurations without any drive bays if desired.

The three drive bay zones are as follows:

- Front:
  - Up to 12x 3.5-inch hot-swap bays, or
  - Up to 24x 2.5-inch hot-swap bays
- Middle:
  - 4x 3.5-inch hot-swap bays, or
  - 8x 2.5-inch hot-swap bays
- Rear:
  - Up to 4x 3.5-inch hot-swap bays, or
  - Up to 8x 2.5-inch hot-swap bays
  - Also supports 2x 7mm hot-swap drives bays

All drives are hot-swap and are accessible from the front, from the rear, or from drive bays that are located in the middle of the server (accessible when you remove the top cover of the server).

The server also supports one or two M.2 drives, installed in an M.2 adapter internal to the server.

In this section:

- NVMe drive support
- Front drive bays
- Mid drive bays
- Rear drive bays
- Supported drive bay combinations
- Controller selections
- Field upgrades
- RAID flash power module (supercap) support
- M.2 drives
- 7mm drives
- SED encryption key management

NVMe drive support

The SR665 supports NVMe drives to maximize storage performance.

- Up to 16 NVMe drives without oversubscription (that is, each x4 drive has a dedicated x4 (4 lanes) connection to the processor)
  - All installed in front bays
- Up to 32 NVMe drives with oversubscription (that is, eight x4 drives share a x16 connection via an NVMe switch, and the switch manages the connections to maximize performance of all drives)
  - 24 NVMe drives in the front bays
  - 8 NVMe drives in the mid bays

- Up to 12 NVMe drives in a 3.5-inch drive configuration
    - All installed in front bays

Riser 3 support: The use of the onboard NVMe ports is mutually exclusive with Riser 3, as these use the same PCIe connectors. See the System architecture section.

The specifics of these configurations are covered in the Supported drive bay combinations and Controller selections sections.

The tables in those sections indicate the number of NVMe drives in each configuration plus the subscription ratio. The subscription ratio is the number of PCIe lanes from the processor compared to the number of lanes to the drives. A ratio of 1:1 means all drives get the full number of lanes they need to maximize drive performance (currently 4 lanes per drive). A ratio of 1:2 means each drive only gets the half the bandwidth from the processor.

In addition, the SR665 supports two 7mm NVMe drives for use as boot drives. These two drives are connected via separate RAID controller connected to a single PCIe 3.0 x2 host interface. See the 7mm drives section for details.

The RAID 940-8i and RAID 940-16i adapters also support NVMe through a feature named Tri-Mode support (or Trimode support). This feature enables the use of NVMe U.3 drives at the same time as SAS and SATA drives. Cabling of the controller to the backplanes is the same as with SAS/SATA drives, and the NVMe drives are connected via a PCIe x1 link to the controller.

NVMe drives connected using Tri-Mode support provide better performance than SAS or SATA drives: A SATA SSD has a data rate of 6Gbps, a SAS SSD has a data rate of 12Gbps, whereas an NVMe U.3 Gen 4 SSD with a PCIe x1 link will have a data rate of 16Gbps. NVMe drives typically also have lower latency and higher IOPS compared to SAS and SATA drives. Tri-Mode is supported with U.3 NVMe drives in either 2.5-inch and 3.5-inch form factor and requires an AnyBay backplane.

Tri-Mode requires U.3 drives: Only NVMe drives with a U.3 interface are supported. U.2 drives are not supported. See the Internal drive options section for the U.3 drives supported by the server.

Front drive bays

The front drive bay zone supports the following configurations:

- 3.5-inch drive bays (all hot-swap)
  - No backplane and no drives (supports field upgrades)
  - 8x 3.5-inch SAS/SATA
  - 12x 3.5-inch SAS/SATA
  - 12x 3.5-inch AnyBay
- 2.5-inch drive bays (all hot-swap)
  - No backplane and no drives (supports field upgrades)
  - 8x SAS/SATA
  - 16x SAS/SATA
  - 24x SAS/SATA
  - 8x NVMe
  - 16x NVMe
  - 24x NVMe
  - 8x SAS/SATA + 8x NVMe
  - 16x SAS/SATA + 8x NVMe
  - 8x SAS/SATA + 16x NVMe
  - 8x AnyBay
  - 8x AnyBay + 8x NVMe
  - 8x SAS/SATA + 8x AnyBay
  - 16x SAS/SATA + 8x AnyBay

These configurations are shown in the following figure. The feature codes listed are the backplane feature codes when ordering CTO and correspond to the feature codes listed in the table below the figure.

Tip: Configurations with 8x or 16x total drive bays can be configured with or without an Integrated Diagnostics Panel with pull-out LCD display. With the Integrated Diagnostics Display, 8-bay configurations can be upgrade to 16 bays, however 16-bay configurations cannot be upgrade to 24 bays. See the Local management section for details.



Figure 7. SR665 front drive bay configurations

The backplanes used to provide these drive bays are listed in the following table.

Field upgrades: All front backplanes are available as part numbers for field upgrades along with require cable option kits, as described in the Field upgrades section below.

Table 18. Backplanes for front drive bays

Feature code	Description	Maximum supported
Front 3.5-inch drive backplanes		
B8LP	ThinkSystem 2U 8x3.5" SAS/SATA Backplane	1
B8LT	ThinkSystem 2U 12x3.5" SAS/SATA Backplane	1
B8LK	ThinkSystem 2U 12x3.5" AnyBay Backplane	1
Front 2.5-inch drive backplanes		
B8LU	ThinkSystem 2U 8x2.5" SAS/SATA Backplane	3
B8LM	ThinkSystem 2U/4U 8x2.5" AnyBay Backplane	1
BCQM	ThinkSystem 2U/4U 8x2.5" NVMe Backplane	3
Integrated Diagnostics Panel (for 2.5-inch configurations with 8 or 16 bays only)		
BMJA	ThinkSystem 2U 16x2.5" Front Operator Panel v2	1
B8MS	ThinkSystem 2U 16x2.5" Front Operator Panel	1

Common backplanes: Two of the 2.5-inch backplanes listed in the above table use the same physical circuit board. Feature codes B8LM and BCQM use a backplane with eight bays where each bay has both a SAS/SATA connection and an NVMe connection. The difference is which connectors on the backplane are cabled: NVMe and SAS/SATA or just NVMe. Both feature codes use backplane SBB7A06906.

The use of front drive bays has the following configuration rules:

- If 3.5-inch front drive bays are used, an internal RAID adapter or HBA is not supported as the adapter and bays occupy the same physical space
- Any 8x 2.5-inch and 16x 2.5-inch drive configuration (SAS/SATA, AnyBay, NVMe) can optionally be configured for use with the Integrated Diagnostics Panel. 3.5-inch drive configurations do not support the Integrated Diagnostics Panel.

Mid drive bays

The SR665 supports hot-swap drives installed in the middle of the server chassis. The drive bays are accessible by removing the top lid of the server and levering the mid drive chassis up at the front.

The following configurations are supported:

- 4x 3.5-inch hot-swap SAS/SATA drive bays
- 8x 2.5-inch hot-swap SAS/SATA drive bays
- 8x 2.5-inch hot-swap NVMe drive bays

The drive bays in the open position are shown in the following figure.

M.2 support: When mid drive bays are configured, the M.2 adapter is installed on the mid drive bay mechanical as shown in the images.

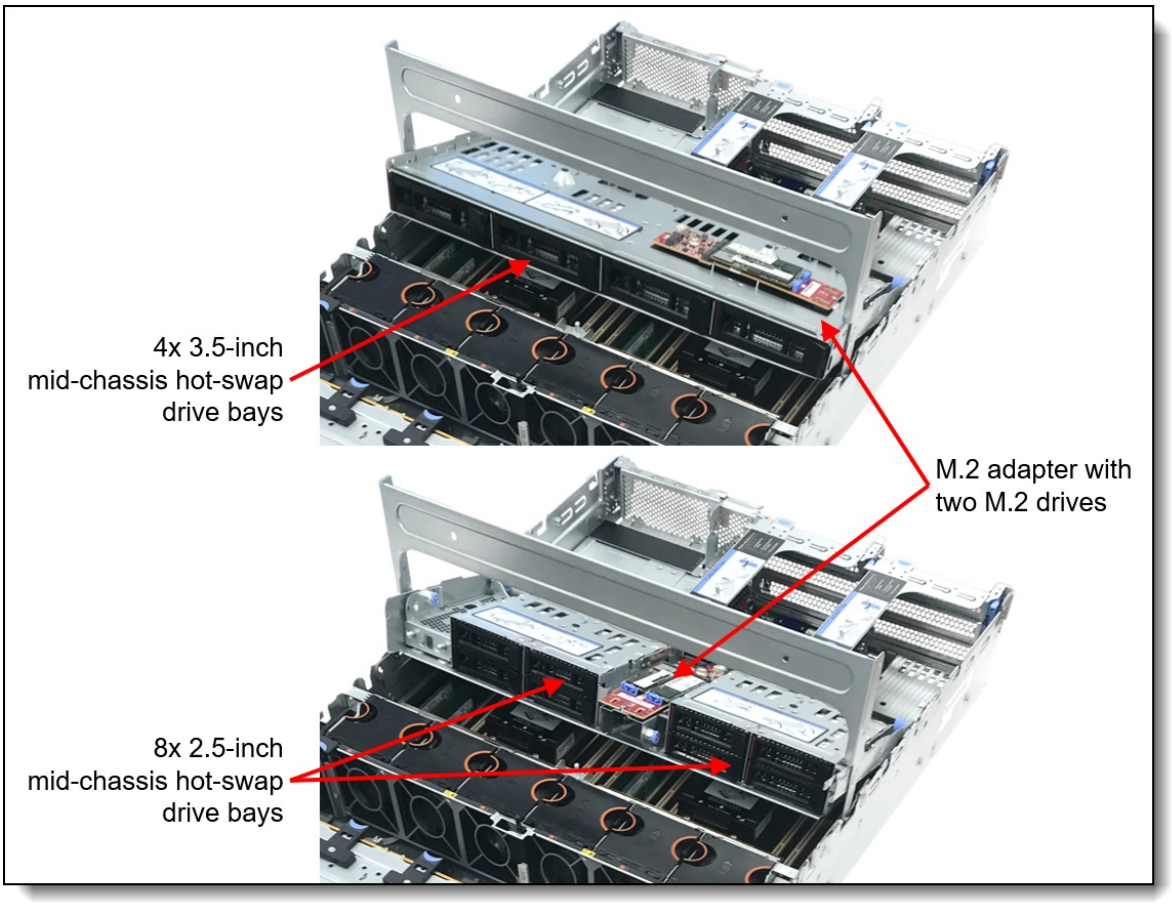

Figure 8. Mid-chassis drive bays

The backplanes used to provide these drive bays are listed in the following table.

Table 19. Backplanes for mid drive bays

Feature code	Description	Maximum supported
Mid - 3.5-inch drive backplane		
BCQK	ThinkSystem 2U 4x3.5" SAS/SATA Middle Backplane	1
Mid - 2.5-inch drive backplane		
BCQL	ThinkSystem 2U 4x2.5" SAS/SATA Middle Backplane	2‡
B5VN	ThinkSystem 2.5" NVMe 4-Bay Middle Backplane	2‡

‡ 2.5-inch drive backplanes for the mid-chassis area must be installed in pairs. NVMe and SAS/SATA cannot be mixed.

Field upgrades: Backplanes are available as part numbers for field upgrades along with require cable option kits, as described in the Field upgrades section below.

The use of drive bays in the mid-chassis area has the following configuration rules:

- All processors are supported. Higher TDP processors will require the performance heatsinks.
- Full-length adapter cards are not supported
- GPUs (including low profile GPUs such as the T4) are not supported

- The use of mid drive bays requires both Riser 1 and Riser 2 be installed, since power for the mid bay backplanes comes from Riser 2 (and Riser 2 requires Riser 1 be configured)

Rear drive bays

The SR665 supports hot-swap drives installed at the rear of the server chassis. Supported configurations are as follows:

- 3.5-inch hot-swap drives
  - 2x SAS/SATA drive bays
  - 4x SAS/SATA drive bays
- 2.5-inch hot-swap drives
  - 4x SAS/SATA drive bays
  - 8x SAS/SATA drive bays

The configurations are shown in the following figure.

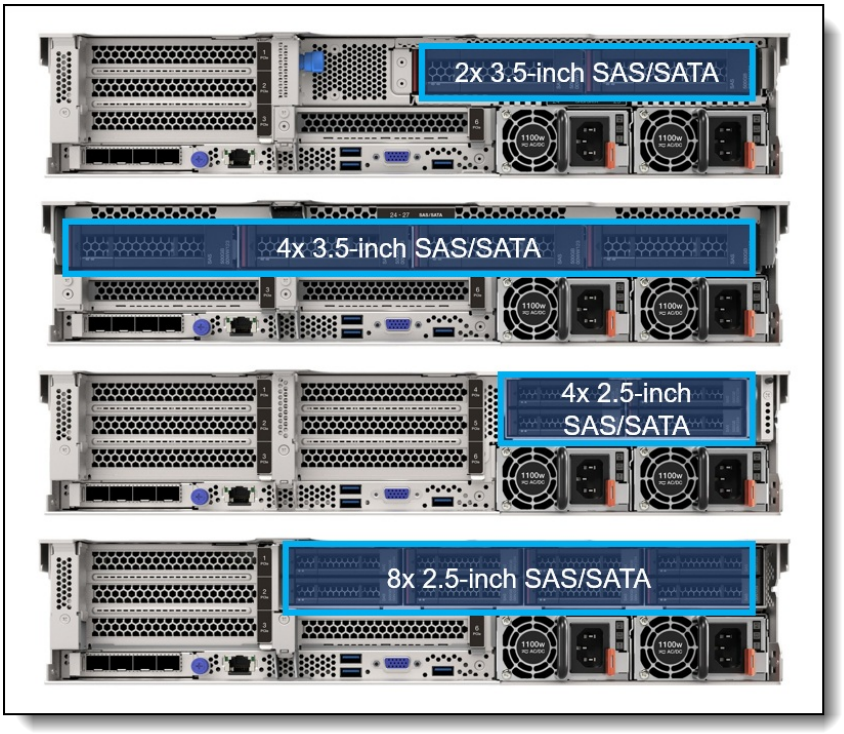

Figure 9. Rear 2.5-inch and 3.5-inch drive bay configurations

In addition, the server supports two 7mm-thickness SSDs which are installed in place of either slot 3 or slot 6 (not both). Supported 7mm drive bays are:

- 2x 7mm SAS/SATA hot-swap drive bays
- 2x 7mm NVMe hot-swap drive bays

These drives are shown in the following figure. See the 7mm drives section for more information.

Tips: These 7mm drives can be used in conjunction with any rear drive 2.5-inch or 3.5-inch bay combination.

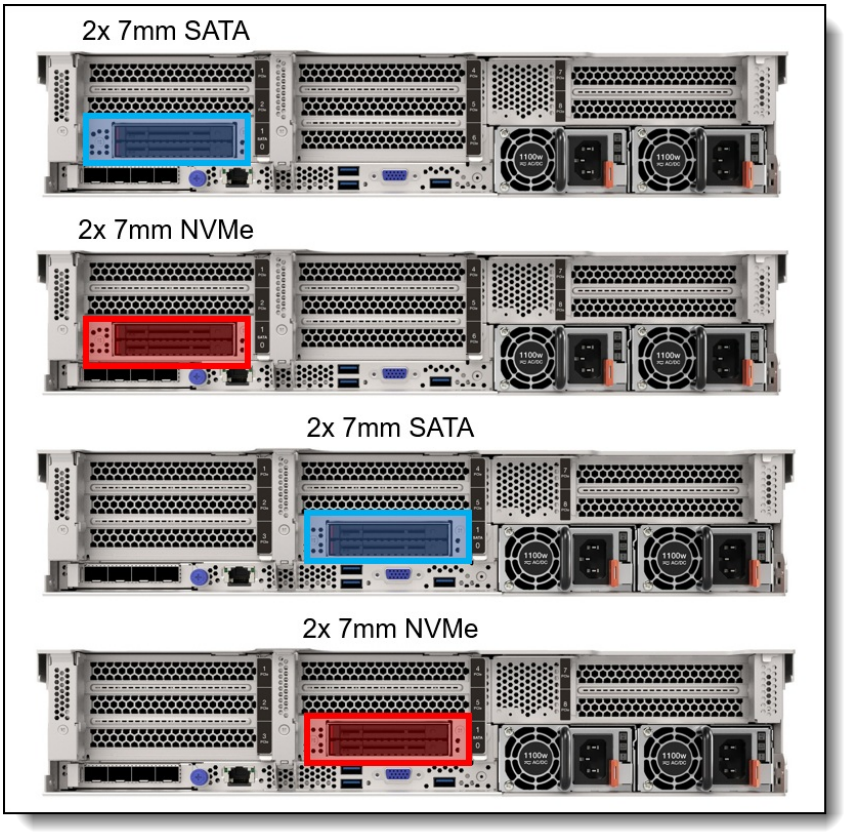

Figure 10. Rear 7mm drive bay configurations

The backplanes used to provide these drive bays are listed in the following table.

Table 20. Backplanes for rear drive bays

Feature code	Description	Maximum supported
Rear - 3.5-inch drive backplanes		
BAG7	ThinkSystem 2U 2x3.5" SAS/SATA Rear Backplane	1
B8L3	ThinkSystem 1U/2U 4x3.5" SAS/SATA Backplane	1
Rear - 2.5-inch drive backplanes		
B8LV	ThinkSystem 2U 4x2.5" SAS/SATA Backplane	1
B97X	ThinkSystem 2U 8x2.5" SAS/SATA Rear Backplane	1
Rear 7mm		
B8P2	ThinkSystem 2U 7mm Drive Kit w/ SATA RAID	1
B8P3	ThinkSystem 2U 7mm Drive Kit w/ NVMe RAID	1

Field upgrades: Backplanes are available as part numbers for field upgrades along with require cable option kits, as described in the Field upgrades section below.

The use of rear drive bays has the following configuration rules:

- The use of rear bays restricts the number of slots and the choice of risers that are supported. See the I/O expansion section for details.

- The use of rear drive bays requires Riser 1 be installed, since power for the rear backplane comes from Riser 1
- The 7mm rear drive kit is supported in either slot 3 or slot 6 but not both at the same time.
- The 7mm drive enclosure is connected to an onboard NVMe port (connected to CPU 2) and cannot be connected to any installed RAID adapter or HBA.

Supported drive bay combinations

This section describes the various combinations of 3.5-inch and 2.5-inch drives that the server supports. The drive bay combinations are grouped based on the drive type at the front of the server, 3.5-inch or 2.5-inch.

3.5-inch drive bay chassis

The following table shows the supported combinations when the server is configured with a 3.5-inch chassis (where the front drive bays are 3.5-inch). The table lists the front, middle and rear backplanes required for each drive bay combination. The choice of storage controller for each configuration is listed in the Controller selections section.

Table 21. Drive bay and backplane combinations with 3.5-inch chassis (Blue cells = SAS/SATA, Purple cells = AnyBay, Red cells = NVMe) (S/S = SAS/SATA, Any = AnyBay)

Cfg	Total drives	NVMe drives§	Front bays		Mid bays			Rear bays		7mm NVMe/ SATA	M.2	Front backplane	Mid backplane	Rear backplane
			S/S 3.5"	Any 3.5"	S/S 3.5"	S/S 2.5"	NVMe 2.5"	S/S 3.5"	S/S 2.5"					
Configurations with 2 processors installed														
A	8	0	8	0	0	0	0	0	0	Opt	Opt	1x 8-S/S	None	None
B	12	0	12	0	0	0	0	0	0	Opt*	Opt*	1x 12-S/S	None	None
C	14	0	12	0	0	0	0	2	0	Opt	Opt	1x 12-S/S	None	1x 2-3.5
D	16	0	12	0	0	0	0	4	0	Opt†	Opt	1x 12-S/S	None	1x 4-3.5
E	20	0	12	0	4	0	0	4	0	No	Opt*	1x 12-S/S	1x 4-3.5	1x 4-3.5
F	16	0	12	0	0	0	0	0	4	Opt	Opt	1x 12-S/S	None	1x 4-2.5
G	20	0	12	0	4	0	0	0	4	Opt*	Opt*	1x 12-S/S	1x 4-3.5	1x 4-2.5
H	20	8 (1:1)	12	0	0	0	8	0	0	Opt	Opt	1x 12-S/S	2x NVMe	None
I	12	12 (1:1)	0	12	0	0	0	0	0	No	No	1x 12-AnyBay	None	None
J	12	12 (1:4§)	0	12	0	0	0	0	0	Opt	Opt	1x 12-AnyBay	None	None
K	16	12 (1:1)	0	12	0	0	0	4	0	No	No	1x 12-AnyBay	None	1x 4-3.5
L	20	12 (1:1)	0	12	4	0	0	4	0	No	No	1x 12-AnyBay	1x 4-3.5	1x 4-3.5
Configurations with 1 processor installed														
M	8	0	8	0	0	0	0	0	0	No	Opt‡	1x 8-S/S	None	None
N	12	0	12	0	0	0	0	0	0	No	Opt	1x 12-S/S	None	None
O	14	0	12	0	0	0	0	2	0	No	Opt	1x 12-S/S	None	1x 2-3.5
P	16	0	12	0	0	0	0	4	0	No	Opt	1x 12-S/S	None	1x 4-3.5
R	16	0	12	0	0	0	0	0	4	No	Opt	1x 12-S/S	None	1x 4-2.5
S	12	12 (1:4§)	0	12	0	0	0	0	0	Opt	Opt	1x 12-AnyBay	None	None

§ The text in parenthesis refers to the subscription ratio. See the NVMe support section for details.
* If using Onboard SATA then 7mm drives and M.2 are mutually exclusive
† No support if using second adapter for rear drives
‡ No support if using Onboard SATA

2.5-inch drive bay chassis

The following table shows the supported combinations when the server is configured with a 2.5-inch chassis (where the front drive bays are 2.5-inch). The table lists the front, middle and rear backplanes required for each drive bay combination. The choice of storage controller for each configuration is listed in the Controller selections section.

Table 22. Drive bay and backplane combinations with 2.5-inch chassis (Blue cells = SAS/SATA, Red cells = NVMe, Purple cells = AnyBay) (S/S = SAS/SATA, Any = AnyBay)

			Front bays			Mid bays			Rear bays						
Cfg	Total bays	NVMe drives§	S/S 2.5"	Any 2.5"	NVMe 2.5"	S/S 3.5"	S/S 2.5"	NVMe 2.5"	S/S 3.5"	S/S 2.5"	7mm NVMe/ SATA	M.2	Front backplane	Mid b'plane	Rear b'plane
Configurations with 2 processors installed															
A	8	0	8	0	0	0	0	0	0	0	Opt	Opt	1x 8-S/S	None	None
B	16	0	16	0	0	0	0	0	0	0	Opt‡	Opt‡	2x 8-S/S	None	None
C	24	0	24	0	0	0	0	0	0	0	Opt	Opt	3x 8-S/S	None	None
D	28	0	24	0	0	0	0	0	0	4	Opt	Opt	3x 8-S/S	None	1x 4-2.5
E	36	0	24	0	0	0	8	0	0	4	Opt	Opt	3x 8-S/S	2x 4-2.5	1x 4-2.5
F	40	0	24	0	0	0	8	0	0	8	No	Opt	3x 8-S/S	2x 4-2.5	2x 4-2.5
G	8	8 (1:1)	0	0	8	0	0	0	0	0	Opt	Opt	1x 8-NVMe	None	None
H	16	16 (1:1)	0	0	16	0	0	0	0	0	No	No	2x 8-NVMe	None	None
I	24	24 (1:1)	0	0	24	0	0	0	0	0	Opt	Opt	3x 8-NVMe	None	None
J	32	32 (1:2)	0	0	24	0	0	8	0	0	Opt	Opt	3x 8-NVMe	2x 4-NVMe	None
K	16	8 (1:1)	8	0	8	0	0	0	0	0	Opt*	Opt*	1x 8-S/S + 1x 8-NVMe	None	None
L	24	8 (1:1)	16	0	8	0	0	0	0	0	Opt	Opt	2x 8-S/S + 1x 8-NVMe	None	None
M	24	16 (1:1)	8	0	16	0	0	0	0	0	No	No	1x 8-S/S + 2x 8-NVMe	None	None
N	8	8 (1:1)	0	8	0	0	0	0	0	0	Opt	Opt	1x 8-Any	None	None
O	8	8 (1:4§)	0	8	0	0	0	0	0	0	Opt	Opt	1x 8-Any	None	None
P	16	16 (1:4§)	0	16	0	0	0	0	0	0	Opt	Opt	2x 8-Any	None	None
Q	16	16 (1:1)	0	8	8	0	0	0	0	0	No	No	1x 8-Any + 1x 8-NVMe	None	None
R	16	8 (1:1)	8	8	0	0	0	0	0	0	Opt	Opt	1x 8-S/S + 1x 8-Any	None	None

Cfg	Total bays	NVMe drives§	Front bays			Mid bays			Rear bays		7mm NVMe/ SATA	M.2	Front backplane	Mid b'plane	Rear b'plane
			S/S 2.5"	Any 2.5"	NVMe 2.5"	S/S 3.5"	S/S 2.5"	NVMe 2.5"	S/S 3.5"	S/S 2.5"					
S	24	8 (1:1)	16	8	0	0	0	0	0	0	Opt	Opt	2x 8-S/S + 1x 8-Any	None	None
T	28	8 (1:1)	16	8	0	0	0	0	0	4	Opt	Opt	2x 8-S/S + 1x 8-Any	None	1x 4-2.5
Configurations with 1 processor installed															
U	8	0	8	0	0	0	0	0	0	0	No	Opt‡	1x 8-S/S	None	None
V	16	0	16	0	0	0	0	0	0	0	No	Opt	2x 8-S/S	None	None
W	24	0	24	0	0	0	0	0	0	0	No	Opt	3x 8-S/S	None	None
X	28	0	24	0	0	0	0	0	0	4	No	Opt	3x 8-S/S	None	1x 4-2.5
Z	8	8 (1:4§)	0	8	0	0	0	0	0	0	Opt	Opt	1x 8-Any	None	None
AA	8	8 (1:1)	0	0	8	0	0	0	0	0	No	No	1x 8-NVMe	None	None

§ The text in parenthesis refers to the subscription ratio. See the NVMe support section for details.
* No support if using OB SATA + OB NVMe
‡ No support if using OB SATA

Controller selections

This section helps you determine with storage adapter are supported for your desired drive bay configuration.

In the tables, the controllers are grouped as follows:

- RAID 8i corresponds to any of the following:
  - ThinkSystem RAID 530-8i PCIe 12Gb Adapter, 7Y37A01082
  - ThinkSystem RAID 5350-8i PCIe 12Gb Adapter, 4Y37A72482
  - ThinkSystem RAID 540-8i PCIe Gen4 12Gb Adapter, 4Y37A78834
  - ThinkSystem RAID 930-8i 2GB Flash PCIe 12Gb Adapter, 7Y37A01084
  - ThinkSystem RAID 9350-8i 2GB Flash PCIe 12Gb Adapter, 4Y37A72483
  - ThinkSystem RAID 940-8i 4GB Flash PCIe Gen4 12Gb Adapter, 4Y37A09728
  - ThinkSystem RAID 940-8i 8GB Flash PCIe Gen4 12Gb Adapter, 4Y37A09729
- RAID 16i corresponds to any of the following:
  - ThinkSystem RAID 530-16i PCIe 12Gb Adapter, 4Y37A09727
  - ThinkSystem RAID 540-16i PCIe Gen4 12Gb Adapter, 4Y37A78835
  - ThinkSystem RAID 930-16i 4GB Flash PCIe 12Gb Adapter, 7Y37A01085
  - ThinkSystem RAID 9350-16i 4GB Flash PCIe 12Gb Adapter, 4Y37A72485
  - ThinkSystem RAID 940-16i 4GB Flash PCIe Gen4 12Gb Adapter, 4Y37A78600
  - ThinkSystem RAID 940-16i 8GB Flash PCIe Gen4 12Gb Adapter, 4Y37A09730
- RAID 16i Int (also referred to as RAID 16i CFF, compact form factor) corresponds to the following:
  - ThinkSystem RAID 940-16i 8GB Flash PCIe Gen4 12Gb Internal Adapter, 4Y37A09735
- RAID 32i corresponds to the following:
  - ThinkSystem RAID 940-32i 8GB Flash PCIe Gen4 12Gb Adapter, 4Y37A09733
- RAID 940-8i/16i Trimode-U.3 corresponds to the following (or equivalent adapter part number with the latest adapter firmware):
  - ThinkSystem RAID 940-16i 8GB Flash PCIe Gen4 12Gb Adapter for U.3, BDY4
  - ThinkSystem RAID 940-8i 4GB Flash PCIe Gen4 12Gb Adapter for U.3, BGM1
  - ThinkSystem RAID 940-16i 4GB Flash PCIe Gen4 12Gb Adapter for U.3, BM36
  - ThinkSystem RAID 940-16i 8GB Flash PCIe Gen4 12Gb Internal Adapter for U.3, BGM2
  - ThinkSystem RAID 940-8i 8GB Flash PCIe Gen4 12Gb Adapter for U.3, BGM0

- Exp Int corresponds to the following:
  - ThinkSystem 48 port 12Gb Internal Expander
- HBA 8i corresponds to the following:
  - ThinkSystem 430-8i SAS/SATA 12Gb HBA, 7Y37A01088
  - ThinkSystem 4350-8i SAS/SATA 12Gb HBA, 4Y37A72480
  - ThinkSystem 440-8i SAS/SATA PCIe Gen4 12Gb HBA, 4Y37A78601
- HBA 16i corresponds to the following:
  - ThinkSystem 430-16i SAS/SATA 12Gb HBA, 7Y37A01089
  - ThinkSystem 4350-16i SAS/SATA 12Gb HBA, 4Y37A72481
  - ThinkSystem 440-16i SAS/SATA PCIe Gen4 12Gb HBA, 4Y37A78602
- HBA 16i Int (also referred to as HBA 16i CFF) corresponds to the following:
  - ThinkSystem 440-16i SAS/SATA PCIe Gen4 12Gb Internal HBA, 4Y37A09725
- OB SATA (onboard SATA) corresponds to the following in CTO orders:
  - Onboard SATA AHCI Mode, feature AVUX
- OB NVMe (onboard NVMe) corresponds to the following in CTO orders:
  - Non RAID NVMe, feature BC4V
- Switch-8P corresponds to:
  - ThinkSystem 1610-8P NVMe Switch Adapter, 4Y37A09764
  - ThinkSystem 1611-8P PCIe Gen4 Switch Adapter, 4Y37A09737
- Retimer:
  - ThinkSystem 4-Port PCIe Gen4 NVMe Retimer Adapter, 4C57A65446

Mixing of adapter families not supported: It is not supported to have a configuration with a mix of adapter families, X30, X350 and X40. For example, you cannot build a configuration with a 930 RAID adapter and a 9350 RAID adapter, or a configuration with 930 RAID adapter and 940 RAID adapter.

Many of the configurations also support the 7mm rear drive bays (which can can be either SATA or NVMe) and the M.2 adapter. Support is marked as "Opt" (short for Optional). "No" means no support for the respective drive type. Restrictions are noted as appropriate. See the 7mm drives and M.2 drives sections for details.

3.5-inch chassis configurations

The following table lists the supported drive bay combinations for configurations with 3.5-inch front drive bays, plus the list of supported controller combinations supported by each of those drive bay combinations. Information about the controllers can be found in the Controllers for internal storage section.

Table 23. Drive bay combinations with 3.5-inch chassis (Blue cells = SAS/SATA, Purple = AnyBay, Red cells = NVMe)

Cfg	Front bays		Mid bays			Rear bays		7mm NVMe/ SATA	M.2	Supported controller combinations (choose one) (drive count) (OB=onboard, F=Front, M=Mid, R=Rear)
	S/S 3.5"	Any 3.5"	S/S 3.5"	S/S 2.5"	NVMe 2.5"	S/S 3.5"	S/S 2.5"			
Configurations with 2 processors installed										
A	8	0	0	0	0	0	0	Opt	Opt	• OB SATA (8) (F) • 1x RAID/HBA 8i (8) (F)
B	12	0	0	0	0	0	0	Opt*	Opt*	• OB SATA (12) (F) • 1x RAID/HBA 16i (12) (F)
C	12	0	0	0	0	2	0	Opt	Opt	• 1x RAID/HBA 16i (14) (F+R) • 1x RAID/HBA 16i (12) (F) + 1x RAID 8i (2) (R)
D	12	0	0	0	0	4	0	Opt†	Opt	• 1x RAID/HBA 16i (16) (F+R) • 1x RAID/HBA 16i (12) (F) + RAID 8i (4) (R)
E	12	0	4	0	0	4	0	No	Opt*	• OB SATA (12) (F) + HBA 8i (8) (M+R) • 1x RAID 32i (20) (F+M+R)
F	12	0	0	0	0	0	4	Opt	Opt	• 1x RAID/HBA 16i (16) (F+R) • 1x RAID/HBA 16i (12) (F) + RAID 8i (4) (R)
G	12	0	4	0	0	0	4	Opt*	Opt*	• OB SATA (12) (F) + HBA 8i (8) (M+R) • 1x RAID 32i (20) (F+M+R)
H	12	0	0	0	8	0	0	Opt	Opt	• 1x RAID/HBA 16i (12) (F) + OB NVMe (8) (M)
I	0	12	0	0	0	0	0	No	No	• 1x RAID/HBA 16i (12) + OB NVMe (12) (F)
J	0	12	0	0	0	0	0	Opt	Opt	• 1x RAID 940-16i Trimode-U.3 (12) (F)§
K	0	12	0	0	0	4	0	No	No	• 1x RAID/HBA 16i + 12x OB NVMe (F+R) • 1x RAID/HBA 16i (F) + 12x OB NVMe + 1x RAID 8i (R)
L	0	12	4	0	0	4	0	No	No	• 1x RAID 32i (20) + OB NVMe (12) (F+M+R)
Configurations with 1 processor installed										
M	8	0	0	0	0	0	0	No	Opt‡	• OB SATA (8) (F) • 1x RAID/HBA 8i (8) (F)
N	12	0	0	0	0	0	0	No	Opt	• 1x RAID/HBA 16i (12) (F)
O	12	0	0	0	0	2	0	No	Opt	• 1x RAID/HBA 16i (14) (F+R)
P	12	0	0	0	0	4	0	No	Opt	• 1x RAID/HBA 16i (16) (F+R)
R	12	0	0	0	0	0	4	No	Opt	• 1x RAID/HBA 16i (16) (F+R)
S	0	12	0	0	0	0	0	Opt	Opt	• 1x RAID 940-16i Trimode-U.3 (12) (F)§

* If using OB SATA then 7mm drives and M.2 are mutually exclusive
† No support if using second adapter for rear drives
‡ No support if using OB SATA
§ SAS, SATA or U.3 NVMe drives supported; U.2 NVMe drives not supported. Each NVMe drive has a PCIe x1 connection.

2.5-inch chassis configurations

The following table lists the supported drive bay combinations for configurations with 2.5-inch front drive bays, plus the list of supported controller combinations supported by each of those drive bay combinations. Information about the controllers can be found in the Controllers for internal storage section.

Table 24. Drive bay combinations with 2.5-inch chassis (Blue = SAS/SATA, Purple = AnyBay, Red = NVMe)

Cfg	Front bays			Mid bays			Rear bays		7mm NVMe/ SATA	M.2	Supported controller combinations (choose one) (drive count) (OB=onboard, F=Front, M=Mid, R=Rear)
	S/S 2.5"	Any 2.5"	NVMe 2.5"	S/S 3.5"	S/S 2.5"	NVMe 2.5"	S/S 3.5"	S/S 2.5"			
Configurations with 2 processors installed											
A	8	0	0	0	0	0	0	0	Opt	Opt	• OB SATA (8) (F) • 1x RAID/HBA 8i (8) (F) • 1x RAID/HBA 16i (8) (F) • 1x RAID/HBA 16i Int (8) (F)
B	16	0	0	0	0	0	0	0	Opt‡	Opt‡	• OB SATA (16) (F) • 2x RAID/HBA 8i (16) (F) • 1x RAID/HBA 16i (16) (F) • 1x RAID/HBA 16i Int (16) (F)
C	24	0	0	0	0	0	0	0	Opt	Opt	• 3x RAID 8i (24) (F) • 1x RAID/HBA 8i + Exp 36i Int (24) (F) • 1x RAID/HBA 16i Int + Exp 36i Int (24) (F) • 1x RAID 32i (24) (F)
D	24	0	0	0	0	0	0	4	Opt	Opt	• 3x RAID 8i (24) (F) + 1x RAID 8i (4) (R) • 1x RAID/HBA 8i + Exp 36i Int (28) (F+R) • 1x RAID/HBA 16i Int + Exp 36i Int (28) (F+R) • 1x RAID 32i (28) (F+R)
E	24	0	0	0	8	0	0	4	Opt	Opt	• 1x RAID/HBA 8i + Exp 36i Int (36) (F+M+R) • 1x RAID/HBA 16i Int + Exp 36i Int (36) (F+M+R)
F	24	0	0	0	8	0	0	8	No	Opt	• 1x RAID 16i Int + Exp 36i Int (40) (F+M+R)
G	0	0	8	0	0	0	0	0	Opt	Opt	• OB NVMe (8) (F)
H	0	0	16	0	0	0	0	0	No	No	• OB NVMe (12) + 1x Switch-8P (4) (F) • OB NVMe (12) + 1x Retimer (4) (F)
I	0	0	24	0	0	0	0	0	Opt	Opt	• OB NVMe (8) + 4x Retimer (4) (F) • 3x Switch-8P (24) (F) (1:2 oversub)
J	0	0	24	0	0	8	0	0	Opt	Opt	• 3x Switch-8P (24) (F) + 1x Switch-8P (8) (M)
K	8	0	8	0	0	0	0	0	Opt*	Opt*	• OB SATA (8) + OB NVMe (8) (F) • 1x RAID/HBA 8i (8) + OB NVMe (8) (F) • 1x RAID/HBA 16i (8) + OB NVMe (8) (F) • 1x RAID/HBA 16i Int (8) + OB NVMe (8) (F)
L	16	0	8	0	0	0	0	0	Opt	Opt	• 2x RAID/HBA 8i (16) + OB NVMe (8) (F) • 1x RAID/HBA 16i (16) + OB NVMe (8) (F) • 1x RAID/HBA 16i Int (16) + OB NVMe (8) (F) • 1x RAID 32i (16) + OB NVMe (8) (F)
M	8	0	16	0	0	0	0	0	No	No	• 1x RAID/HBA 8i (8) + OB NVMe (12) + 1x Switch-8P (4) (F) • 1x RAID/HBA 16i (8) + OB NVMe (12) + 1x Switch-8P (4) (F) • 1x RAID/HBA 8i (8) + OB NVMe (12) + 1x Retimer (4) (F) • 1x RAID/HBA 16i (8) + OB NVMe (12) + 1x Retimer (4) (F)

Cfg	Front bays			Mid bays			Rear bays		7mm NVMe/ SATA	M.2	Supported controller combinations (choose one) (drive count) (OB=onboard, F=Front, M=Mid, R=Rear)
	S/S 2.5"	Any 2.5"	NVMe 2.5"	S/S 3.5"	S/S 2.5"	NVMe 2.5"	S/S 3.5"	S/S 2.5"			
N	0	8	0	0	0	0	0	0	Opt	Opt	• 1x RAID/HBA 8i (8) + OB NVMe (8) (F) • 1x RAID/HBA 16i (8) + 8x OB NVMe (8) (F) • 1x RAID/HBA 16i Int (8) + OB NVMe (8) (F)
O	0	8	0	0	0	0	0	0	Opt	Opt	• 1x RAID 940-8i Trimode-U.3 (8) (F)§ • 1x RAID 940-16i Trimode-U.3 (8) (F)§ • 1x RAID 940-16i Int Trimode-U.3 (8) (F)§
P	0	16	0	0	0	0	0	0	Opt	Opt	• 2x RAID 940-8i Trimode-U.3 (8) (F)§ • 1x RAID 940-16i Trimode-U.3 (8) (F)§ • 1x RAID 940-16i Int Trimode-U.3 (8) (F)§
Q	0	8	8	0	0	0	0	0	No	No	• 1x RAID/HBA 8i (8) + OB NVMe (12) + 1x Switch-8P (4) (F) • 1x RAID/HBA 16i + OB NVMe (12) + 1x Switch-8P (4) (F) • 1x RAID/HBA 8i (8) + OB NVMe (12) + 1x Retimer (4) (F) • 1x RAID/HBA 16i + OB NVMe (12) + 1x Retimer (4) (F)
R	8	8	0	0	0	0	0	0	Opt	Opt	• 2x RAID/HBA 8i (16) + OB NVMe (8) (F) • 1x RAID/HBA 16i (16) + OB NVMe (8) (F) • 1x RAID/HBA 16i Internal (16) + OB NVMe (8) (F) • 1x RAID 32i (16) + OB NVMe (8) (F)
S	16	8	0	0	0	0	0	0	Opt	Opt	• 3x RAID/HBA 8i (24) + OB NVMe (8) (F) • 1x RAID/HBA 8i + Exp 36i Int (24) + OB NVMe (8) (F) • 1x RAID/HBA 16i Int + Exp 36i Int (24) + OB NVMe (8) (F) • 1x RAID 32i (24) + OB NVMe (8) (F)
T	16	8	0	0	0	0	0	4	Opt	Opt	• 3x RAID/HBA 8i (24) + OB NVMe (8) (F) + 1x RAID/HBA 8i (4) (R) • 1x RAID/HBA 8i + Exp 36i Int (28) + OB NVMe (8) (F+R) • 1x RAID/HBA 16i Int + Exp 36i Int (28) + OB NVMe (8) (F+R) • 1x RAID 32i (28) + OB NVMe (8) (F+R)
Configurations with 1 processor installed											
U	8	0	0	0	0	0	0	0	No	Opt‡	• OB SATA (8) (F) • 1x RAID/HBA 8i (8) (F) • 1x RAID/HBA 16i (8) (F)
V	16	0	0	0	0	0	0	0	No	Opt	• 2x RAID/HBA 8i (16) (F) • 1x RAID/HBA 16i (16) (F)
W	24	0	0	0	0	0	0	0	No	Opt	• 3x RAID/HBA 8i (24) (F) • 1x RAID/HBA 8i + Exp 36i Int (24) (F) • 1x RAID 32i (24) (F)
X	24	0	0	0	0	0	0	4	No	Opt	• 1x RAID/HBA 8i + Exp 36i Int (28) (F) • 1x RAID 32i (28) (F)
Z	0	8	0	0	0	0	0	0	Opt	Opt	• 1x RAID 940-8i Trimode-U.3 (8) (F)§ • 1x RAID 940-16i Trimode-U.3 (8) (F)§ • 1x RAID 940-16i Int Trimode-U.3 (8) (F)§
AA	0	0	8	0	0	0	0	0	No	No	• OB NVMe (4) + Switch-8P (4) (F) • OB NVMe (4) + Retimer (4) (F)

* No support if using OB SATA + OB NVMe
‡ No support if using OB SATA
§ SAS, SATA or U.3 NVMe drives supported; U.2 NVMe drives not supported. Each NVMe drive has a PCIe x1 connection.
† Configurations that use the Retimer adapter do not support drives in the following NVMe drive families: CM6-V, CM6-R and CM5-V. See the Internal drive options section for the specific drives not supported.

Field upgrades

The SR665 is orderable without drive bays, allowing you to add a backplane, cabling and controllers as field upgrades. The server also supports upgrading some configurations by adding additional front drive bays (for example, upgrading from 8 to 16x 2.5-inch drive bays).

Upgrade path: The key criteria for upgrade support is to ensure that the target configuration is one of the supported drive bay configurations as listed in the Supported drive bay combinations section.

For example, if you are upgrading a 2.5-inch drive configuration from Config A to Config B, you will need these additional options:

- 4XH7A60930, 2U 8x2.5" SAS/SATA Backplane option Kit
- 4X97A59775, SR665 2.5" Chassis Front BP2 SAS/SATA Cable Kit

To add drive bays you will need to order both drive backplanes and cable kits. Backplane kits do not include cables.

Topics in this section:

- 3.5-inch chassis drive bay upgrades
- 2.5-inch chassis drive bay upgrades

For more information about the backplane kits and cable kits, see the Information Center: https://thinksystem.lenovofiles.com/help/topic/7D2W/system_options.html?cp=4_13_7

3.5-inch chassis drive bay upgrades

The table below lists the backplane kits and cable kits needed to build one of the supported 3.5-inch chassis configurations. The configurations each have a letter that matches the configurations listed in the Supported drive bay combinations and Controller selections sections.

Table 25. Drive bay field upgrade for the 3.5-inch chassis (Blue = SAS/SATA, Purple = AnyBay, Red = NVMe)

	Front bays		Mid bays		Rear bays		
Cfg	S/S 3.5"	Any 3.5"	S/S 3.5"	NVMe 2.5"	S/S 3.5"	S/S 2.5"	Backplane and cable kits required (all required)
A & M	8	0	0	0	0	0	1. **4XH7A60932**, ThinkSystem SR650 V2/SR665 8x3.5" SAS/SATA Backplane Option Kit 2. **4X97A80381**, ThinkSystem SR665 3.5" Chassis Front Backplane SAS/SATA Cable Kit v2 or **4X97A59762**, ThinkSystem SR665 3.5" Chassis Front Backplane SAS/SATA Cable Kit
B & N	12	0	0	0	0	0	1. **4XH7A60929**, ThinkSystem SR650 V2/SR665 12x3.5" SAS/SATA Backplane Option Kit 2. **4X97A80381**, ThinkSystem SR665 3.5" Chassis Front Backplane SAS/SATA Cable Kit v2 or **4X97A59762**, ThinkSystem SR665 3.5" Chassis Front Backplane SAS/SATA Cable Kit

Cfg	Front bays		Mid bays		Rear bays		Backplane and cable kits required (all required)
	S/S 3.5"	Any 3.5"	S/S 3.5"	NVMe 2.5"	S/S 3.5"	S/S 2.5"	
C & O	12	0	0	0	2	0	1. **4XH7A60929**, ThinkSystem SR650 V2/SR665 12x3.5" SAS/SATA Backplane Option Kit 2. **4XH7A60940**, ThinkSystem SR650 V2/SR665 Rear 2x3.5" SAS/SATA Backplane Option Kit 3. **4X97A80381**, ThinkSystem SR665 3.5" Chassis Front Backplane SAS/SATA Cable Kit v2 or **4X97A59762**, ThinkSystem SR665 3.5" Chassis Front Backplane SAS/SATA Cable Kit 4. **4X97A80383**, ThinkSystem SR665 3.5" Chassis Rear Backplane SAS/SATA Cable Kit v2 or **4X97A59764**, ThinkSystem SR665 3.5" Chassis Rear Backplane SAS/SATA Cable Kit
D & P	12	0	0	0	4	0	1. **4XH7A60929**, ThinkSystem SR650 V2/SR665 12x3.5" SAS/SATA Backplane Option Kit 2. **4XH7A60939**, ThinkSystem SR650 V2/SR665 Rear 4x3.5" SAS/SATA Backplane Option Kit 3. **4X97A80381**, ThinkSystem SR665 3.5" Chassis Front Backplane SAS/SATA Cable Kit v2 or **4X97A59762**, ThinkSystem SR665 3.5" Chassis Front Backplane SAS/SATA Cable Kit 4. **4X97A80383**, ThinkSystem SR665 3.5" Chassis Rear Backplane SAS/SATA Cable Kit v2 or **4X97A59764**, ThinkSystem SR665 3.5" Chassis Rear Backplane SAS/SATA Cable Kit
E	12	0	4	0	4	0	1. **4XH7A60929**, ThinkSystem SR650 V2/SR665 12x3.5" SAS/SATA Backplane Option Kit 2. **4XH7A60937**, ThinkSystem SR665 Middle 4x3.5" SAS/SATA Backplane Option Kit 3. **4XH7A60939**, ThinkSystem SR650 V2/SR665 Rear 4x3.5" SAS/SATA Backplane Option Kit 4. **4X97A80381**, ThinkSystem SR665 3.5" Chassis Front Backplane SAS/SATA Cable Kit v2 or **4X97A59762**, ThinkSystem SR665 3.5" Chassis Front Backplane SAS/SATA Cable Kit 5. **4X97A80384**, ThinkSystem SR665 3.5" Chassis Middle Backplane SAS/SATA Cable Kit v2 or **4X97A59765**, ThinkSystem SR665 3.5" Chassis Middle Backplane SAS/SATA Cable Kit 6. **4X97A80383**, ThinkSystem SR665 3.5" Chassis Rear Backplane SAS/SATA Cable Kit v2 or **4X97A59764**, ThinkSystem SR665 3.5" Chassis Rear Backplane SAS/SATA Cable Kit
F & R	12	0	0	0	0	4	1. **4XH7A60929**, ThinkSystem SR650 V2/SR665 12x3.5" SAS/SATA Backplane Option Kit 2. **4XH7A60938**, ThinkSystem SR650 V2/SR665 Rear 4x2.5" SAS/SATA Backplane Option Kit 3. **4X97A80381**, ThinkSystem SR665 3.5" Chassis Front Backplane SAS/SATA Cable Kit v2 or **4X97A59762**, ThinkSystem SR665 3.5" Chassis Front Backplane SAS/SATA Cable Kit 4. **4X97A80383**, ThinkSystem SR665 3.5" Chassis Rear Backplane SAS/SATA Cable Kit v2 or **4X97A59764**, ThinkSystem SR665 3.5" Chassis Rear Backplane SAS/SATA Cable Kit

Cfg	Front bays		Mid bays		Rear bays		Backplane and cable kits required (all required)
	S/S 3.5"	Any 3.5"	S/S 3.5"	NVMe 2.5"	S/S 3.5"	S/S 2.5"	
G	12	0	4	0	0	4	1. **4XH7A60929**, ThinkSystem SR650 V2/SR665 12x3.5" SAS/SATA Backplane Option Kit 2. **4XH7A60937**, ThinkSystem SR665 Middle 4x3.5" SAS/SATA Backplane Option Kit 3. **4XH7A60938**, ThinkSystem SR650 V2/SR665 Rear 4x2.5" SAS/SATA Backplane Option Kit 4. **4X97A80381**, ThinkSystem SR665 3.5" Chassis Front Backplane SAS/SATA Cable Kit v2 or **4X97A59762**, ThinkSystem SR665 3.5" Chassis Front Backplane SAS/SATA Cable Kit 5. **4X97A80384**, ThinkSystem SR665 3.5" Chassis Middle Backplane SAS/SATA Cable Kit v2 or **4X97A59765**, ThinkSystem SR665 3.5" Chassis Middle Backplane SAS/SATA Cable Kit 6. **4X97A80383**, ThinkSystem SR665 3.5" Chassis Rear Backplane SAS/SATA Cable Kit v2 or **4X97A59764**, ThinkSystem SR665 3.5" Chassis Rear Backplane SAS/SATA Cable Kit
H	12	0	0	8	0	0	1. **4XH7A60929**, ThinkSystem SR650 V2/SR665 12x3.5" SAS/SATA Backplane Option Kit 2. **4XH7A60936**, ThinkSystem SR665 Middle 8x2.5" NVMe Backplane Option Kit 3. **4X97A80381**, ThinkSystem SR665 3.5" Chassis Front Backplane SAS/SATA Cable Kit v2 or **4X97A59762**, ThinkSystem SR665 3.5" Chassis Front Backplane SAS/SATA Cable Kit 4. **4X97A80380**, ThinkSystem SR665 3.5" Chassis Middle Backplane NVMe Cable Kit v2 or **4X97A59771**, ThinkSystem SR665 3.5" Chassis Middle Backplane NVMe Cable Kit
I	0	12	0	0	0	0	1. **4XH7A60933**, ThinkSystem SR665 12x3.5" AnyBay Backplane Option Kit 2. **4X97A80382**, ThinkSystem SR665 3.5" Chassis Front Backplane Anybay Cable Kit v2 or **4X97A59763**, ThinkSystem SR665 3.5" Chassis Front Backplane Anybay Cable Kit
J & S	0	12	0	0	0	0	1. **4XH7A60933**, ThinkSystem SR665 12x3.5" AnyBay Backplane Option Kit 2. **4X97A80381**, ThinkSystem SR665 3.5" Chassis Front Backplane SAS/SATA Cable Kit v2 or **4X97A59762**, ThinkSystem SR665 3.5" Chassis Front Backplane SAS/SATA Cable Kit
K	0	12	0	0	4	0	1. **4XH7A60933**, ThinkSystem SR665 12x3.5" AnyBay Backplane Option Kit 2. **4XH7A60939**, ThinkSystem SR650 V2/SR665 Rear 4x3.5" SAS/SATA Backplane Option Kit 3. **4X97A80382**, ThinkSystem SR665 3.5" Chassis Front Backplane Anybay Cable Kit v2 or **4X97A59763**, ThinkSystem SR665 3.5" Chassis Front Backplane Anybay Cable Kit 4. **4X97A80383**, ThinkSystem SR665 3.5" Chassis Rear Backplane SAS/SATA Cable Kit v2 or **4X97A59764**, ThinkSystem SR665 3.5" Chassis Rear Backplane SAS/SATA Cable Kit
L	0	12	4	0	4	0	1. **4XH7A60933**, ThinkSystem SR665 12x3.5" AnyBay Backplane Option Kit 2. **4XH7A60937**, ThinkSystem SR665 Middle 4x3.5" SAS/SATA Backplane Option Kit 3. **4XH7A60939**, ThinkSystem SR650 V2/SR665 Rear 4x3.5" SAS/SATA Backplane Option Kit 4. **4X97A80382**, ThinkSystem SR665 3.5" Chassis Front Backplane Anybay Cable Kit v2 or **4X97A59763**, ThinkSystem SR665 3.5" Chassis Front Backplane Anybay Cable Kit 5. **4X97A80384**, ThinkSystem SR665 3.5" Chassis Middle Backplane SAS/SATA Cable Kit v2 or **4X97A59765**, ThinkSystem SR665 3.5" Chassis Middle Backplane SAS/SATA Cable Kit 6. **4X97A80383**, ThinkSystem SR665 3.5" Chassis Rear Backplane SAS/SATA Cable Kit v2 or **4X97A59764**, ThinkSystem SR665 3.5" Chassis Rear Backplane SAS/SATA Cable Kit

2.5-inch chassis drive bay upgrades

The table below lists the backplane kits and cable kits needed to build one of the supported 2.5-inch chassis configurations. The configurations each have a letter that matches the configurations listed in the Supported drive bay combinations and Controller selections sections.

Note: Front drive cable kits are based on the location of the backplane in the server. The three backplane locations are BP1, BP2 and BP3 as shown in the following figure.

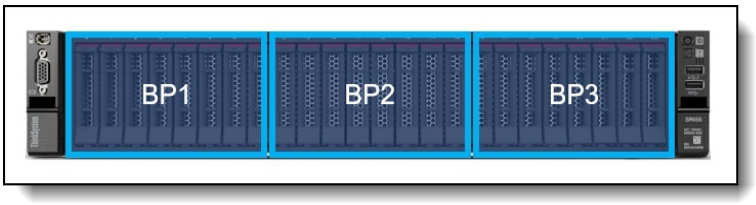

Figure 11. Backplane numbering

Table 26. Drive bay field upgrade for the 2.5-inch chassis (Blue = SAS/SATA, Purple = AnyBay, Red = NVMe)

Cfg	Front bays			Mid bays		Rear	Backplane and cable kits required (all required)
	S/S 2.5"	Any 2.5"	NVMe 2.5"	S/S 2.5"	NVMe 2.5"	S/S 2.5"	
A & U	8	0	0	0	0	0	1. **4XH7A60930**, ThinkSystem SR650 V2/SR665 8x2.5" SAS/SATA Backplane Option Kit 2. **4X97A80391**, ThinkSystem SR665 2.5" Chassis Front BP1 SAS/SATA Cable Kit v2 or **4X97A59773**, ThinkSystem SR665 2.5" Chassis Front BP1 SAS/SATA Cable Kit
B & V	16	0	0	0	0	0	1. **4XH7A60930**, ThinkSystem SR650 V2/SR665 8x2.5" SAS/SATA Backplane Option Kit 2. **4XH7A60930**, ThinkSystem SR650 V2/SR665 8x2.5" SAS/SATA Backplane Option Kit 3. **4X97A80391**, ThinkSystem SR665 2.5" Chassis Front BP1 SAS/SATA Cable Kit v2 or **4X97A59773**, ThinkSystem SR665 2.5" Chassis Front BP1 SAS/SATA Cable Kit 4. **4X97A80393**, ThinkSystem SR665 2.5" Chassis Front BP2 SAS/SATA Cable Kit v2 or **4X97A59775**, ThinkSystem SR665 2.5" Chassis Front BP2 SAS/SATA Cable Kit
C & W	24	0	0	0	0	0	1. **4XH7A60930**, ThinkSystem SR650 V2/SR665 8x2.5" SAS/SATA Backplane Option Kit 2. **4XH7A60930**, ThinkSystem SR650 V2/SR665 8x2.5" SAS/SATA Backplane Option Kit 3. **4XH7A60930**, ThinkSystem SR650 V2/SR665 8x2.5" SAS/SATA Backplane Option Kit 4. **4X97A80391**, ThinkSystem SR665 2.5" Chassis Front BP1 SAS/SATA Cable Kit v2 or **4X97A59773**, ThinkSystem SR665 2.5" Chassis Front BP1 SAS/SATA Cable Kit 5. **4X97A80393**, ThinkSystem SR665 2.5" Chassis Front BP2 SAS/SATA Cable Kit v2 or **4X97A59775**, ThinkSystem SR665 2.5" Chassis Front BP2 SAS/SATA Cable Kit 6. **4X97A80395**, ThinkSystem SR665 2.5" Chassis Front BP3 SAS/SATA Cable Kit v2 or **4X97A59777**, ThinkSystem SR665 2.5" Chassis Front BP3 SAS/SATA Cable Kit

Cfg	Front bays			Mid bays		Rear	Backplane and cable kits required (all required)
	S/S 2.5"	Any 2.5"	NVMe 2.5"	S/S 2.5"	NVMe 2.5"	S/S 2.5"	
D & X	24	0	0	0	0	4	1. **4XH7A60930**, ThinkSystem SR650 V2/SR665 8x2.5" SAS/SATA Backplane Option Kit 2. **4XH7A60930**, ThinkSystem SR650 V2/SR665 8x2.5" SAS/SATA Backplane Option Kit 3. **4XH7A60930**, ThinkSystem SR650 V2/SR665 8x2.5" SAS/SATA Backplane Option Kit 4. **4XH7A60938**, ThinkSystem SR650 V2/SR665 Rear 4x2.5" SAS/SATA Backplane Option Kit 5. **4X97A80391**, ThinkSystem SR665 2.5" Chassis Front BP1 SAS/SATA Cable Kit v2 or **4X97A59773**, ThinkSystem SR665 2.5" Chassis Front BP1 SAS/SATA Cable Kit 6. **4X97A80393**, ThinkSystem SR665 2.5" Chassis Front BP2 SAS/SATA Cable Kit v2 or **4X97A59775**, ThinkSystem SR665 2.5" Chassis Front BP2 SAS/SATA Cable Kit 7. **4X97A80395**, ThinkSystem SR665 2.5" Chassis Front BP3 SAS/SATA Cable Kit v2 or **4X97A59777**, ThinkSystem SR665 2.5" Chassis Front BP3 SAS/SATA Cable Kit 8. **4X97A80397**, ThinkSystem SR665 2.5" Chassis Rear Backplane SAS/SATA Cable Kit v2 or **4X97A59779**, ThinkSystem SR665 2.5" Chassis Rear Backplane SAS/SATA Cable Kit
E	24	0	0	8	0	4	1. **4XH7A60930**, ThinkSystem SR650 V2/SR665 8x2.5" SAS/SATA Backplane Option Kit 2. **4XH7A60930**, ThinkSystem SR650 V2/SR665 8x2.5" SAS/SATA Backplane Option Kit 3. **4XH7A60930**, ThinkSystem SR650 V2/SR665 8x2.5" SAS/SATA Backplane Option Kit 4. **4XH7A60935**, ThinkSystem SR665 Middle 8x2.5" SAS/SATA Backplane Option Kit 5. **4XH7A60938**, ThinkSystem SR650 V2/SR665 Rear 4x2.5" SAS/SATA Backplane Option Kit 6. **4X97A80391**, ThinkSystem SR665 2.5" Chassis Front BP1 SAS/SATA Cable Kit v2 or **4X97A59773**, ThinkSystem SR665 2.5" Chassis Front BP1 SAS/SATA Cable Kit 7. **4X97A80393**, ThinkSystem SR665 2.5" Chassis Front BP2 SAS/SATA Cable Kit v2 or **4X97A59775**, ThinkSystem SR665 2.5" Chassis Front BP2 SAS/SATA Cable Kit 8. **4X97A80395**, ThinkSystem SR665 2.5" Chassis Front BP3 SAS/SATA Cable Kit v2 or **4X97A59777**, ThinkSystem SR665 2.5" Chassis Front BP3 SAS/SATA Cable Kit 9. **4X97A80398**, ThinkSystem SR665 2.5" Chassis Middle Backplane SAS/SATA Cable Kit v2 or **4X97A59780**, ThinkSystem SR665 2.5" Chassis Middle Backplane SAS/SATA Cable Kit 10. **4X97A80397**, ThinkSystem SR665 2.5" Chassis Rear Backplane SAS/SATA Cable Kit v2 or **4X97A59779**, ThinkSystem SR665 2.5" Chassis Rear Backplane SAS/SATA Cable Kit

Cfg	Front bays			Mid bays		Rear	Backplane and cable kits required (all required)
	S/S 2.5"	Any 2.5"	NVMe 2.5"	S/S 2.5"	NVMe 2.5"	S/S 2.5"	
F	24	0	0	8	0	8	1. **4XH7A60930**, ThinkSystem SR650 V2/SR665 8x2.5" SAS/SATA Backplane Option Kit 2. **4XH7A60930**, ThinkSystem SR650 V2/SR665 8x2.5" SAS/SATA Backplane Option Kit 3. **4XH7A60930**, ThinkSystem SR650 V2/SR665 8x2.5" SAS/SATA Backplane Option Kit 4. **4XH7A60935**, ThinkSystem SR665 Middle 8x2.5" SAS/SATA Backplane Option Kit 5. **4XH7A60941**, ThinkSystem SR650 V2/SR665 Rear 8x2.5" SAS/SATA Backplane Option Kit 6. **4X97A80391**, ThinkSystem SR665 2.5" Chassis Front BP1 SAS/SATA Cable Kit v2 or **4X97A59773**, ThinkSystem SR665 2.5" Chassis Front BP1 SAS/SATA Cable Kit 7. **4X97A80393**, ThinkSystem SR665 2.5" Chassis Front BP2 SAS/SATA Cable Kit v2 or **4X97A59775**, ThinkSystem SR665 2.5" Chassis Front BP2 SAS/SATA Cable Kit 8. **4X97A80395**, ThinkSystem SR665 2.5" Chassis Front BP3 SAS/SATA Cable Kit v2 or **4X97A59777**, ThinkSystem SR665 2.5" Chassis Front BP3 SAS/SATA Cable Kit 9. **4X97A80398**, ThinkSystem SR665 2.5" Chassis Middle Backplane SAS/SATA Cable Kit v2 or **4X97A59780**, ThinkSystem SR665 2.5" Chassis Middle Backplane SAS/SATA Cable Kit 10. **4X97A80397**, ThinkSystem SR665 2.5" Chassis Rear Backplane SAS/SATA Cable Kit v2 or **4X97A59779**, ThinkSystem SR665 2.5" Chassis Rear Backplane SAS/SATA Cable Kit
G & AA	0	0	8	0	0	0	1. **4XH7A61059**, ThinkSystem SR665 8x2.5" NVMe Backplane option Kit 2. **4X97A80392**, ThinkSystem SR665 2.5" Chassis Front BP1 NVMe Cable Kit v2 or **4X97A59774**, ThinkSystem SR665 2.5" Chassis Front BP1 NVMe Cable Kit
H	0	0	16	0	0	0	1. **4XH7A61059**, ThinkSystem SR665 8x2.5" NVMe Backplane option Kit 2. **4XH7A61059**, ThinkSystem SR665 8x2.5" NVMe Backplane option Kit 3. **4X97A80399**, ThinkSystem SR665 2.5" Chassis Front BP1+2 16x NVMe System+Adapter Cable Kit v2 or **4X97A59781**, ThinkSystem SR665 2.5" Chassis Front BP1+2 16x NVMe System+Adapter Cable Kit
I (switch)	0	0	24	0	0	0	1. **4XH7A61059**, ThinkSystem SR665 8x2.5" NVMe Backplane option Kit 2. **4XH7A61059**, ThinkSystem SR665 8x2.5" NVMe Backplane option Kit 3. **4XH7A61059**, ThinkSystem SR665 8x2.5" NVMe Backplane option Kit 4. **4X97A80401**, ThinkSystem SR665 2.5" Chassis 24x and 32x NVMe Cable Kit v2 or **4X97A59783**, ThinkSystem SR665 2.5" Chassis 24x and 32x NVMe Cable Kit
I (retimer)	0	0	24	0	0	0	1. **4XH7A61059**, ThinkSystem SR665 8x2.5" NVMe Backplane option Kit 2. **4XH7A61059**, ThinkSystem SR665 8x2.5" NVMe Backplane option Kit 3. **4XH7A61059**, ThinkSystem SR665 8x2.5" NVMe Backplane option Kit 4. **4X97A59855**, ThinkSystem SR665 2.5" Chassis 24x NVMe Retimer Cable Kit

Cfg	Front bays			Mid bays		Rear	Backplane and cable kits required (all required)
	S/S 2.5"	Any 2.5"	NVMe 2.5"	S/S 2.5"	NVMe 2.5"	S/S 2.5"	
J	0	0	24	0	8	0	1. **4XH7A61059**, ThinkSystem SR665 8x2.5" NVMe Backplane option Kit 2. **4XH7A61059**, ThinkSystem SR665 8x2.5" NVMe Backplane option Kit 3. **4XH7A61059**, ThinkSystem SR665 8x2.5" NVMe Backplane option Kit 4. **4XH7A60936**, ThinkSystem SR665 Middle 8x2.5" NVMe Backplane Option Kit 5. **4X97A80401**, ThinkSystem SR665 2.5" Chassis 24x and 32x NVMe Cable Kit v2 or **4X97A59783**, ThinkSystem SR665 2.5" Chassis 24x and 32x NVMe Cable Kit
K	8	0	8	0	0	0	1. **4XH7A60930**, ThinkSystem SR650 V2/SR665 8x2.5" SAS/SATA Backplane Option Kit 2. **4XH7A61059**, ThinkSystem SR665 8x2.5" NVMe Backplane option Kit 3. **4X97A80391**, ThinkSystem SR665 2.5" Chassis Front BP1 SAS/SATA Cable Kit v2 or **4X97A59773**, ThinkSystem SR665 2.5" Chassis Front BP1 SAS/SATA Cable Kit 4. **4X97A80394**, ThinkSystem SR665 2.5" Chassis Front BP2 NVMe Cable Kit v2 or **4X97A59776**, ThinkSystem SR665 2.5" Chassis Front BP2 NVMe Cable Kit
L	16	0	8	0	0	0	1. **4XH7A60930**, ThinkSystem SR650 V2/SR665 8x2.5" SAS/SATA Backplane Option Kit 2. **4XH7A60930**, ThinkSystem SR650 V2/SR665 8x2.5" SAS/SATA Backplane Option Kit 3. **4XH7A61059**, ThinkSystem SR665 8x2.5" NVMe Backplane option Kit 4. **4X97A80391**, ThinkSystem SR665 2.5" Chassis Front BP1 SAS/SATA Cable Kit v2 or **4X97A59773**, ThinkSystem SR665 2.5" Chassis Front BP1 SAS/SATA Cable Kit 5. **4X97A80393**, ThinkSystem SR665 2.5" Chassis Front BP2 SAS/SATA Cable Kit v2 or **4X97A59775**, ThinkSystem SR665 2.5" Chassis Front BP2 SAS/SATA Cable Kit 6. **4X97A80396**, ThinkSystem SR665 2.5" Chassis Front BP3 NVMe Cable Kit v2 or **4X97A59778**, ThinkSystem SR665 2.5" Chassis Front BP3 NVMe Cable Kit
M	8	0	16	0	0	0	1. **4XH7A60930**, ThinkSystem SR650 V2/SR665 8x2.5" SAS/SATA Backplane Option Kit 2. **4XH7A61059**, ThinkSystem SR665 8x2.5" NVMe Backplane option Kit 3. **4XH7A61059**, ThinkSystem SR665 8x2.5" NVMe Backplane option Kit 4. **4X97A80391**, ThinkSystem SR665 2.5" Chassis Front BP1 SAS/SATA Cable Kit v2 or **4X97A59773**, ThinkSystem SR665 2.5" Chassis Front BP1 SAS/SATA Cable Kit 5. **4X97A80400**, ThinkSystem SR665 2.5" Chassis Front BP2+3 16x NVMe System+Adapter Cable Kit v2 or **4X97A59782**, ThinkSystem SR665 2.5" Chassis Front BP2+3 16x NVMe System+Adapter Cable Kit
N	0	8	0	0	0	0	1. **4XH7A60934**, ThinkSystem SR665 8x2.5" AnyBay Backplane Option Kit 2. **4X97A80391**, ThinkSystem SR665 2.5" Chassis Front BP1 SAS/SATA Cable Kit v2 or **4X97A59773**, ThinkSystem SR665 2.5" Chassis Front BP1 SAS/SATA Cable Kit 3. **4X97A80392**, ThinkSystem SR665 2.5" Chassis Front BP1 NVMe Cable Kit v2 or **4X97A59774**, ThinkSystem SR665 2.5" Chassis Front BP1 NVMe Cable Kit

Cfg	Front bays			Mid bays		Rear	Backplane and cable kits required (all required)
	S/S 2.5"	Any 2.5"	NVMe 2.5"	S/S 2.5"	NVMe 2.5"	S/S 2.5"	
O	0	8	0	0	0	0	1. **4XH7A60934**, ThinkSystem SR665 8x2.5" AnyBay Backplane Option Kit 2. **4X97A80391**, ThinkSystem SR665 2.5" Chassis Front BP1 SAS/SATA Cable Kit v2 or **4X97A59773**, ThinkSystem SR665 2.5" Chassis Front BP1 SAS/SATA Cable Kit
P	0	16	0	0	0	0	1. **4XH7A60934**, ThinkSystem SR665 8x2.5" AnyBay Backplane Option Kit 2. **4XH7A60934**, ThinkSystem SR665 8x2.5" AnyBay Backplane Option Kit 3. **4X97A80391**, ThinkSystem SR665 2.5" Chassis Front BP1 SAS/SATA Cable Kit v2 or **4X97A59773**, ThinkSystem SR665 2.5" Chassis Front BP1 SAS/SATA Cable Kit 4. **4X97A80393**, ThinkSystem SR665 2.5" Chassis Front BP2 SAS/SATA Cable Kit v2 or **4X97A59775**, ThinkSystem SR665 2.5" Chassis Front BP2 SAS/SATA Cable Kit
Q	0	8	8	0	0	0	1. **4XH7A60934**, ThinkSystem SR665 8x2.5" AnyBay Backplane Option Kit 2. **4XH7A61059**, ThinkSystem SR665 8x2.5" NVMe Backplane option Kit 3. **4X97A80391**, ThinkSystem SR665 2.5" Chassis Front BP1 SAS/SATA Cable Kit v2 or **4X97A59773**, ThinkSystem SR665 2.5" Chassis Front BP1 SAS/SATA Cable Kit 4. **4X97A80399**, ThinkSystem SR665 2.5" Chassis Front BP1+2 16x NVMe System+Adapter Cable Kit v2 or **4X97A59781**, ThinkSystem SR665 2.5" Chassis Front BP1+2 16x NVMe System+Adapter Cable Kit
R	8	8	0	0	0	0	1. **4XH7A60930**, ThinkSystem SR650 V2/SR665 8x2.5" SAS/SATA Backplane Option Kit 2. **4XH7A60934**, ThinkSystem SR665 8x2.5" AnyBay Backplane Option Kit 3. **4X97A80391**, ThinkSystem SR665 2.5" Chassis Front BP1 SAS/SATA Cable Kit v2 or **4X97A59773**, ThinkSystem SR665 2.5" Chassis Front BP1 SAS/SATA Cable Kit 4. **4X97A80393**, ThinkSystem SR665 2.5" Chassis Front BP2 SAS/SATA Cable Kit v2 or **4X97A59775**, ThinkSystem SR665 2.5" Chassis Front BP2 SAS/SATA Cable Kit 5. **4X97A80394**, ThinkSystem SR665 2.5" Chassis Front BP2 NVMe Cable Kit v2 or **4X97A59776**, ThinkSystem SR665 2.5" Chassis Front BP2 NVMe Cable Kit
S	16	8	0	0	0	0	1. **4XH7A60930**, ThinkSystem SR650 V2/SR665 8x2.5" SAS/SATA Backplane Option Kit 2. **4XH7A60930**, ThinkSystem SR650 V2/SR665 8x2.5" SAS/SATA Backplane Option Kit 3. **4XH7A60934**, ThinkSystem SR665 8x2.5" AnyBay Backplane Option Kit 4. **4X97A80391**, ThinkSystem SR665 2.5" Chassis Front BP1 SAS/SATA Cable Kit v2 or **4X97A59773**, ThinkSystem SR665 2.5" Chassis Front BP1 SAS/SATA Cable Kit 5. **4X97A80393**, ThinkSystem SR665 2.5" Chassis Front BP2 SAS/SATA Cable Kit v2 or **4X97A59775**, ThinkSystem SR665 2.5" Chassis Front BP2 SAS/SATA Cable Kit 6. **4X97A80395**, ThinkSystem SR665 2.5" Chassis Front BP3 SAS/SATA Cable Kit v2 or **4X97A59777**, ThinkSystem SR665 2.5" Chassis Front BP3 SAS/SATA Cable Kit 7. **4X97A80396**, ThinkSystem SR665 2.5" Chassis Front BP3 NVMe Cable Kit v2 or **4X97A59778**, ThinkSystem SR665 2.5" Chassis Front BP3 NVMe Cable Kit

Cfg	Front bays			Mid bays		Rear	Backplane and cable kits required (all required)
	S/S 2.5"	Any 2.5"	NVMe 2.5"	S/S 2.5"	NVMe 2.5"	S/S 2.5"	
T	16	8	0	0	0	4	1. **4XH7A60930**, ThinkSystem SR650 V2/SR665 8x2.5" SAS/SATA Backplane Option Kit 2. **4XH7A60930**, ThinkSystem SR650 V2/SR665 8x2.5" SAS/SATA Backplane Option Kit 3. **4XH7A60934**, ThinkSystem SR665 8x2.5" AnyBay Backplane Option Kit 4. **4XH7A60938**, ThinkSystem SR650 V2/SR665 Rear 4x2.5" SAS/SATA Backplane Option Kit 5. **4X97A80391**, ThinkSystem SR665 2.5" Chassis Front BP1 SAS/SATA Cable Kit v2 or **4X97A59773**, ThinkSystem SR665 2.5" Chassis Front BP1 SAS/SATA Cable Kit 6. **4X97A80393**, ThinkSystem SR665 2.5" Chassis Front BP2 SAS/SATA Cable Kit v2 or **4X97A59775**, ThinkSystem SR665 2.5" Chassis Front BP2 SAS/SATA Cable Kit 7. **4X97A80395**, ThinkSystem SR665 2.5" Chassis Front BP3 SAS/SATA Cable Kit v2 or **4X97A59777**, ThinkSystem SR665 2.5" Chassis Front BP3 SAS/SATA Cable Kit 8. **4X97A80396**, ThinkSystem SR665 2.5" Chassis Front BP3 NVMe Cable Kit v2 or **4X97A59778**, ThinkSystem SR665 2.5" Chassis Front BP3 NVMe Cable Kit 9. **4X97A80397**, ThinkSystem SR665 2.5" Chassis Rear Backplane SAS/SATA Cable Kit v2 or **4X97A59779**, ThinkSystem SR665 2.5" Chassis Rear Backplane SAS/SATA Cable Kit
Z (standard RAID)	0	8	0	0	0	0	1. **4XH7A60934**, ThinkSystem SR665 8x2.5" AnyBay Backplane Option Kit 2. **4X97A80391**, ThinkSystem SR665 2.5" Chassis Front BP1 SAS/SATA Cable Kit v2 or **4X97A59773**, ThinkSystem SR665 2.5" Chassis Front BP1 SAS/SATA Cable Kit
Z (Internal RAID)	0	8	0	0	0	0	1. **4XH7A60934**, ThinkSystem SR665 8x2.5" AnyBay Backplane Option Kit 2. **4X97A59856**, ThinkSystem SR665 Internal HBA/RAID Adapter Cable Kit for Single-CPU system

If you have an existing configuration with an HBA or RAID adapter installed in one of the rear PCIe slots, and you wish to upgrade to one of the internal storage adapters (RAID 940-16i 8GB Flash PCIe Gen4 12Gb Internal Adapter or 440-16i SAS/SATA PCIe Gen4 12Gb Internal HBA) you will need to order an additional cable kit as listed in the following table.

Table 27. Cable kit when upgrading to an Internal HBA/RAID adapter

Part number	Description
4X97A80390	ThinkSystem SR665 Internal Raid Adapter Input Cable Kit v2
4X97A59772	ThinkSystem SR665 Internal RAID Adapter Input Cable Kit

When adding drive bays, you will also need to add the appropriate storage controller(s). Consult the tables in the Controller selections section to determine what controller sections are supported and what additional controllers you will need. Controllers are described in the Controllers for internal storage section.

RAID flash power module (supercap) support

If you plan to add one of the RAID adapters that includes a RAID flash power module (supercap) as a field upgrade, then you may also need to order a Supercap installation kit for the supercap, depending on the location where the supercap will be installed. For CTO orders, the components needed are automatically derived when you select the RAID adapter.

The adapters that this applies to are as follows:

- ThinkSystem RAID 930-8i 2GB Flash PCIe 12Gb Adapter
- ThinkSystem RAID 930-16i 4GB Flash PCIe 12Gb Adapter
- ThinkSystem RAID 940-8i 4GB Flash PCIe Gen4 12Gb Adapter
- ThinkSystem RAID 940-8i 8GB Flash PCIe Gen4 12Gb Adapter
- ThinkSystem RAID 940-16i 8GB Flash PCIe Gen4 12Gb Adapter
- ThinkSystem RAID 940-16i 8GB Flash PCIe Gen4 12Gb Internal Adapter

The location of the supercaps depends on the mid-chassis drive cage used in the server, as shown in the following table.

Table 28. Supercap support

Mid drive cage	Supercaps supported	Location of supercaps	Supercap holder
No mid drive cage	4	Mounted on the air baffle	Not needed
2.5-inch drives	2	Mounted on the left side of the mid drive cage	Included with mid drive cage
3.5-inch drives	2	Mounted under the system fan cage	Order separately for field upgrades (see following table)

When adding a RAID 930 or 940 adapter as a field upgrade to a configuration with 3.5-inch mid drive bays, order one supercap holder. Ordering information is in the following table.

Table 29. Supercap holder for 3.5-inch mid drive bay config

Part number	Feature	Description	Maximum supported
4M17A61230	B8MQ	ThinkSystem 2U Supercap Holder Kit	1 (holds 2 supercaps)

M.2 drives

The SR665 supports one or two M.2 form-factor SATA or NVMe drives for use as an operating system boot solution or as additional storage.

The M.2 drives install into an M.2 module which is mounted horizontally in the server:

- In servers without mid-chassis drives, the M.2 module is mounted on the air baffle
- With a mid-chassis drive cage (2.5-inch or 3.5-inch), the M.2 module is mounted on the drive cage, as shown in the Mid drive bays section.

There are three different M.2 modules supported, as listed in the following table.

Table 30. M.2 modules

Part number	Feature code	Description	SATA drives	NVMe drives	RAID	Maximum supported
4Y37A09739	B5XH	ThinkSystem M.2 SATA 2-Bay RAID Enablement Kit	Yes	No	Yes	1
4Y37A09750	B8P9	ThinkSystem M.2 NVMe 2-Bay RAID Enablement Kit	No	Yes	Yes	1
4Y37A09738	B5XJ	ThinkSystem M.2 SATA/NVMe 2-Bay Enablement Kit	Yes	Yes	No	1

Supported drives are listed in the Internal drive options section.

The M.2 SATA 2-Bay RAID Enablement Kit has the following features:

- Supports one or two SATA M.2 drives
- Support 42mm, 60mm, 80mm and 110mm drive form factors (2242, 2260, 2280 and 22110)
- RAID support via an onboard Marvell 88SE9230 SATA RAID Controller
- Support JBOD, RAID-0 and RAID-1 (RAID support requires two M.2 drives)
- PCIe 2.0 x2 host interface; 6Gbps SATA connection to the drives
- Management and configuration support via UEFI and OS-based tools
- Supports monitoring and reporting of events and temperature through I2C
- Firmware update via Lenovo firmware update tools

The M.2 NVMe 2-Bay RAID Enablement Kit has the following features:

- Supports one or two NVMe M.2 drives
- Support 42mm, 60mm, 80mm and 110mm drive form factors (2242, 2260, 2280 and 22110)
- RAID support via an onboard Marvell 88NR2241 NVMe RAID Controller
- With 1 drive, supports single-drive RAID-0
- With 2 drives, supports 2-drive RAID-0, 2-drive RAID-1, or two single-drive RAID-0 arrays
- PCIe 3.0 x2 host interface; PCIe 3.0 x1 connection to each drive
- Management and configuration support via UEFI and OS-based tools
- Supports monitoring and reporting of events and temperature through I2C
- Firmware update via Lenovo firmware update tools

The M.2 SATA/NVMe 2-Bay Enablement Kit has the following features:

- Supports one or two M.2 drives, either SATA or NVMe
- When two drives installed, they must be either both SATA or both NVMe
- Support 42mm, 60mm, 80mm and 110mm drive form factors (2242, 2260, 2280 and 22110)
- JBOD support only; no RAID support
- Either 6Gbps SATA or PCIe 3.0 x1 interface to the drives depending on the drives installed
- Supports monitoring and reporting of events and temperature through I2C
- Firmware update via Lenovo firmware update tools

For field upgrades, the SR665 also requires an additional M.2 cable kit. Ordering information is listed in the following table.

Table 31. M.2 Cable for field upgrades

Part number	Description
4X97A59825	ThinkSystem SR650 V2/SR665 M.2 Cable Kit • 330mm signal cable

For further details about M.2 components, see the *ThinkSystem M.2 Drives and M.2 Adapters* product guide:
https://lenovopress.com/lp0769-thinksystem-m2-drives-adapters

7mm drives

The SR665 supports two 7mm drives, either both SATA or both NVMe, at the rear of the server. These drives go in place of either PCIe slot 3 or PCIe slot 6 as shown in the following figure.

Connected to CPU 2: The 7mm drives are connected to CPU 2 regardless of which slot the drives are physically installed in.

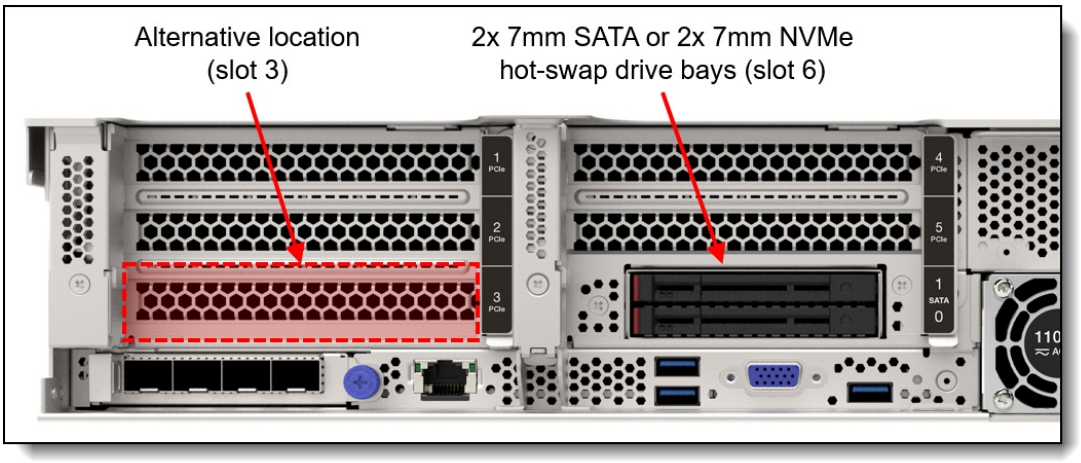

Figure 12. 7mm drive bays

For CTO orders, use the ordering information in the following table for the 7mm drive bays. In the DCSC configurator, you specify which PCIe riser the 7mm drives should be installed in (Riser 1 for slot 3 or Riser 2 for slot 6) by specifying riser feature code B8LQ either for Riser 1 or for Riser 2.

Tip for 4x 3.5-inch rear drives: If you wish to configure 4x 3.5-inch rear drives plus 7mm drives in a CTO configuration (Config D in Supported drive bay combinations), the 7mm drives will install in slot 6. You should specify riser card B8LS for Riser 1 and then leave Riser 2 without a riser selected.

Table 32. 7mm rear drive bays (CTO)

Feature code	Description	Maximum supported
7mm drive bays		
B8P2	ThinkSystem 2U 7mm Drive Kit w/ SATA RAID	1
B8P3	ThinkSystem 2U 7mm Drive Kit w/ NVMe RAID	1
Riser needed for 7mm drive support (used in Riser 1 or Riser 2)		
B8LQ	ThinkSystem 2U PCIe Gen4 x16/x16 Slot 1&2 Riser 1 or 2	1

For field upgrades, using the following ordering information. The kits include two cages for use depending on your PCIe slot configuration. The cages are for either Riser 1 or Riser 2.

Table 33. 7mm rear drive bays (field upgrades)

Part number	Description
4XH7A60927	ThinkSystem SR665 Rear 2x7mm SATA RAID Enablement Kit • 2-bay SATA RAID hot-swap drive enclosure • 2FH+7mm SSD Riser Cage (with 2 FH slots) • 7mm SSD Riser Cage (without slots) • 2x 7mm drive bay fillers • Signal and power cables
4XH7A60928	ThinkSystem SR665 Rear 2x7mm NVMe RAID Enablement Kit • 2-bay NVMe RAID hot-swap drive enclosure • 2FH+7mm SSD Riser Cage (with 2 FH slots) • 7mm SSD Riser Cage (without slots) • 2x 7mm drive bay fillers • Signal and power cables

Each drive enclosure includes an integrated controller providing RAID functions.

The 7mm SATA RAID Drive Kit has the following features:

- Supports 1 or 2 SATA hot-swap drives; drives are 7mm high and 2.5-inches wide
- Integrated controller based on the Marvell 88SE9230 SATA RAID Controller
- PCIe 2.0 x2 host interface to the server system board
- Provides 6 Gbps SATA connectivity to the drives
- Supports JBOD, RAID-0 and RAID-1
- Management and configuration support via UEFI and OS-based tools
- Supports monitoring and reporting of events and temperature through I2C
- Firmware update via Lenovo firmware update tools

The 7mm NVMe RAID Drive Kit has the following features:

- Supports 1 or 2 NVMe hot-swap drives; drives are 7mm high and 2.5-inches wide
- Integrated controller based on the Marvell 88NR2241 NVMe RAID Controller
- PCIe 3.0 x2 host interface to the server system board
- Provides PCIe 3.0 x1 connectivity to each drive
- Supports RAID-0 and RAID-1 (JBOD is not supported)
- Management and configuration support via UEFI and OS-based tools
- Supports monitoring and reporting of events and temperature through I2C
- Firmware update via Lenovo firmware update tools

The following figure shows the 7mm NVMe RAID Drive enclosure installed in the 2FH+7mm SSD Riser Cage.



Figure 13. 7mm NVMe RAID Drive enclosure installed in the 2FH+7mm SSD Riser Cage

SED encryption key management with ISKLM

The server supports self-encrypting drives (SEDs) as listed in the Internal drive options section. To effectively manage a large deployment of these drives in Lenovo servers, IBM Security Key Lifecycle Manager (SKLM) offers a centralized key management solution. A Lenovo Feature on Demand (FoD) upgrade is used to enable this SKLM support in the management processor of the server.

The following table lists the part numbers and feature codes for the upgrades.

Table 34. FoD upgrades for SKLM support

Part number	Feature code	Description
Security Key Lifecycle Manager - FoD (United States, Canada, Asia Pacific, and Japan)		
00D9998	A5U1	SKLM for System x/ThinkSystem w/SEDs - FoD per Install with 1 year S&S
00D9999	AS6C	SKLM for System x/ThinkSystem w/SEDs - FoD per Install with 3 year S&S
Security Key Lifecycle Manager - FoD (Latin America, Europe, Middle East, and Africa)		
00FP648	A5U1	SKLM for System x/ThinkSystem w/SEDs - FoD per Install with 1 year S&S
00FP649	AS6C	SKLM for System x/ThinkSystem w/SEDs - FoD per Install with 3 year S&S

The IBM Security Key Lifecycle Manager software is available from Lenovo using the ordering information listed in the following table.

Table 35. IBM Security Key Lifecycle Manager licenses

Part number	Description
7S0A007FWW	IBM Security Key Lifecycle Manager Basic Edition Install License + SW Subscription & Support 12 Months
7S0A007HWW	IBM Security Key Lifecycle Manager For Raw Decimal Terabyte Storage Resource Value Unit License + SW Subscription & Support 12 Months
7S0A007KWW	IBM Security Key Lifecycle Manager For Raw Decimal Petabyte Storage Resource Value Unit License + SW Subscription & Support 12 Months
7S0A007MWW	IBM Security Key Lifecycle Manager For Usable Decimal Terabyte Storage Resource Value Unit License + SW Subscription & Support 12 Months
7S0A007PWW	IBM Security Key Lifecycle Manager For Usable Decimal Petabyte Storage Resource Value Unit License + SW Subscription & Support 12 Months

Controllers for internal storage

The SR665 offers a variety of controller options for internal drives:

- For 2.5-inch and 3.5-inch drives:
  - Onboard SATA ports (feature AVUX)
  - Onboard NVMe ports (feature BC4V)
  - NVMe switch and retimer adapters (PCIe slot-based)
  - RAID adapters and HBAs for SAS/SATA drives (PCIe slot-based)
  - RAID adapters, SAS Expander, and HBAs for SAS/SATA drives (cabled in a dedicated space)
- For 7mm drive bays in the rear of the server (see the 7mm drives section)
  - SATA controller integrated into the 7mm drive bay enclosure
  - NVMe controller integrated into the 7mm drive bay enclosure
- For M.2 drives internal to the server (see M.2 drives section)
  - SATA controller integrated on the M.2 SATA 2-Bay RAID Enablement Kit
  - NVMe controller integrated on the M.2 NVMe 2-Bay RAID Enablement Kit

As well as supporting RAID adapters and HBAs that install in a PCIe slot, the SR665 with 2.5-inch front drive bays supports a custom adapter that is mounted in the server and cabled to one of the onboard NVMe ports. The HBA 440-16i Internal Adapter and RAID 940-16i Internal Adapter are mounted behind the front 2.5-inch drive bays, as shown in the following figure. These Internal Adapters are not supported with 3.5-inch front drives due to a lack of physical space.

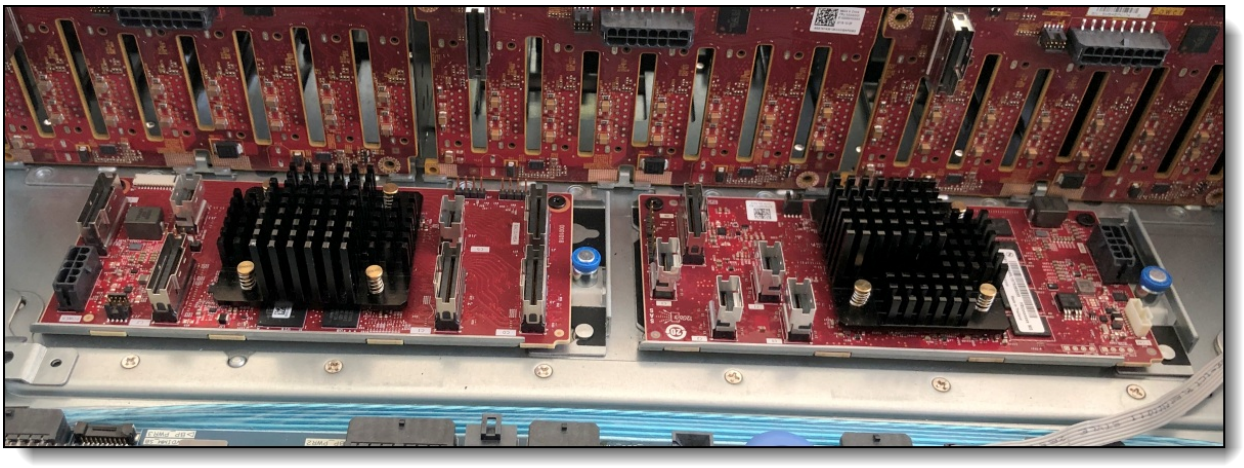

Figure 14. ThinkSystem 12Gb Internal Expander (left) and ThinkSystem RAID 940-16i Internal Adapter (right) installed in the ThinkSystem SR665 (cables and system fans removed for clarity)

The following table lists the adapters used for the internal storage of the server.

Tip: The ThinkSystem 48 port 12Gb Internal Expander used to be named the ThinkSystem 36i 12Gb Internal Expander.

Table 36. Internal Storage adapter support

Part number	Feature code	Description	Power module (supercap)	Slots supported	Maximum supported
Onboard controllers					
CTO only	AVUX	Onboard SATA AHCI Mode	No	N/A	1

Part number	Feature code	Description	Power module (supercap)	Slots supported	Maximum supported
CTO only	BC4V	Non RAID NVMe (Onboard NVMe)	No	N/A	1
SAS/SATA RAID - PCIe 3.0 adapters					
7Y37A01082	AUNG	ThinkSystem RAID 530-8i PCIe 12Gb Adapter	No	All rear slots	4
4Y37A09727	BFY5	ThinkSystem RAID 530-16i PCIe 12Gb Adapter	No	All rear slots	1
4Y37A72482	BJHK	ThinkSystem RAID 5350-8i PCIe 12Gb Adapter	No	All rear slots	4
7Y37A01084	AUNJ	ThinkSystem RAID 930-8i 2GB Flash PCIe 12Gb Adapter	Included	All rear slots	4
7Y37A01085	AUNK	ThinkSystem RAID 930-16i 4GB Flash PCIe 12Gb Adapter	Included	All rear slots	1
4Y37A72483	BJHL	ThinkSystem RAID 9350-8i 2GB Flash PCIe 12Gb Adapter	Included	All rear slots	4
4Y37A72485	BJHN	ThinkSystem RAID 9350-16i 4GB Flash PCIe 12Gb Adapter	Included	All rear slots	1
SAS/SATA RAID - PCIe 4.0 adapters					
4Y37A78834	BMFT	ThinkSystem RAID 540-8i PCIe Gen4 12Gb Adapter	No	All rear slots	4
4Y37A78835	BNAX	ThinkSystem RAID 540-16i PCIe Gen4 12Gb Adapter	No	All rear slots	1
4Y37A09728†	B8NY	ThinkSystem RAID 940-8i 4GB Flash PCIe Gen4 12Gb Adapter	Included	All rear slots	4
4Y37A09729†	B8NW	ThinkSystem RAID 940-8i 8GB Flash PCIe Gen4 12Gb Adapter	Included	All rear slots	4
4Y37A78600†	BM35	ThinkSystem RAID 940-16i 4GB Flash PCIe Gen4 12Gb Adapter	Included	All rear slots	1
4Y37A09735†	B8P0	ThinkSystem RAID 940-16i 8GB Flash PCIe Gen4 12Gb Internal Adapter	Included	Internal	1*
4Y37A09730†	B8NZ	ThinkSystem RAID 940-16i 8GB Flash PCIe Gen4 12Gb Adapter	Included	All rear slots	1
4Y37A09733	B8P8	ThinkSystem RAID 940-32i 8GB Flash PCIe Gen4 12Gb Adapter	Included	All rear slots	1
SAS/SATA HBA - PCIe 3.0 adapters					
7Y37A01088	AUNL	ThinkSystem 430-8i SAS/SATA 12Gb HBA	No	All rear slots	2
7Y37A01089	AUNM	ThinkSystem 430-16i SAS/SATA 12Gb HBA	No	All rear slots	1
4Y37A72480	BJHH	ThinkSystem 4350-8i SAS/SATA 12Gb HBA	No	All rear slots	4
4Y37A72481	BJHJ	ThinkSystem 4350-16i SAS/SATA 12Gb HBA	No	All rear slots	1
SAS/SATA HBA - PCIe 4.0 adapters					
4Y37A09725	B8P1	ThinkSystem 440-16i SAS/SATA PCIe Gen4 12Gb Internal HBA	No	Internal	1*
4Y37A78601	BM51	ThinkSystem 440-8i SAS/SATA PCIe Gen4 12Gb HBA	No	All rear slots	2

Part number	Feature code	Description	Power module (supercap)	Slots supported	Maximum supported
4Y37A78602	BM50	ThinkSystem 440-16i SAS/SATA PCIe Gen4 12Gb HBA	No	All rear slots	1
SAS Expander					
4Y37A09736	B8P6	ThinkSystem 48 port 12Gb Internal Expander	No	Internal	1
NVMe adapters					
4C57A65446	B98C	ThinkSystem 4-Port PCIe Gen4 NVMe Retimer Adapter	No	All rear slots	4
4Y37A09764	B4PA	ThinkSystem 1610-8P NVMe Switch Adapter (PCIe Gen3 adapter‡)	No	All rear slots	4
4Y37A09737	B8P5	ThinkSystem 1611-8P PCIe Gen4 Switch Adapter	No	All rear slots	4
4Y37A09728†	BGM1	ThinkSystem RAID 940-8i 4GB Flash PCIe Gen4 12Gb Adapter for U.3	Included	All rear slots	2
4Y37A09729†	BGM0	ThinkSystem RAID 940-8i 8GB Flash PCIe Gen4 12Gb Adapter for U.3	Included	All rear slots	2
4Y37A09735†	BGM2	ThinkSystem RAID 940-16i 8GB Flash PCIe Gen4 12Gb Internal Adapter for U.3	Included	Internal	1*
4Y37A78600†	BM36	ThinkSystem RAID 940-16i 4GB Flash PCIe Gen4 12Gb Adapter for U.3	Included	All rear slots	1
4Y37A09730†	BDY4	ThinkSystem RAID 940-16i 8GB Flash PCIe Gen4 12Gb Adapter for U.3	Included	All rear slots	1

* Only supported with 2.5-inch front drive bays. Not supported in configurations with 3.5-inch front drive bays.
† Adapter also supports PCIe 4.0 x1 connectivity to NVMe drives (requires NVMe drives with U.3 interface)
‡ The 1610-8P NVMe Switch Adapter is a PCIe 3.0 adapter - this means all NVMe drives connected to it will operate at Gen 3 speed

Configuration notes:

- **Mixing of adapter families not supported**: It is not supported to have a configuration with a mix of adapter families, X30, X350 and X40. For example, you cannot build a configuration with a 930 RAID adapter and a 9350 RAID adapter, or a configuration with 930 RAID adapter and 940 RAID adapter.
- **Supercap support limits the number of RAID adapters installable** : The table lists whether the adapter includes a power module (supercap) to power the flash memory. The server supports between 1 and 4 supercaps depending on the server configuration as described in the RAID flash power module (supercap) support section. The number of supercaps supported also determines the maximum number of RAID adapters with flash that can be installed in the server.
- **Field upgrades**: If you are adding a RAID adapter with supercap to the server as a field upgrade, you may need a supercap holder as described in the RAID flash power module (supercap) support section.
- **7mm drive support**: The storage adapters listed in the table below do *not* provide connectivity to the 7mm drive bays that are optionally available at the rear of the server. The 7mm drives have their own independent RAID controller. See the 7mm drives section for details.

- **RAID 530-8i firmware**: If you plan to use the RAID 530-8i in the server, it must have firmware 50.3.0-1032 or later applied before it can be used in the server. If the adapter you plan to use has older firmware (for example, you are using an adapter you previously purchased), it must first be upgrade by installing it in another server and upgrading the firmware there. For more information, see Support tip HT509177.

The RAID 940-8i and RAID 940-16i adapters also support NVMe through a feature named Tri-Mode support (or Trimode support). This feature enables the use of NVMe U.3 drives at the same time as SAS and SATA drives. Cabling of the controller to the backplanes is the same as with SAS/SATA drives, and the NVMe drives are connected via a PCIe x1 link to the controller.

NVMe drives connected using Tri-Mode support provide better performance than SAS or SATA drives: A SATA SSD has a data rate of 6Gbps, a SAS SSD has a data rate of 12Gbps, whereas an NVMe U.3 Gen 4 SSD with a PCIe x1 link will have a data rate of 16Gbps. NVMe drives typically also have lower latency and higher IOPS compared to SAS and SATA drives. Tri-Mode is supported with U.3 NVMe drives in either 2.5-inch and 3.5-inch form factor and requires an AnyBay backplane.

Tri-Mode requires U.3 drives: Only NVMe drives with a U.3 interface are supported. U.2 drives are not supported. See the Internal drive options section for the U.3 drives supported by the server.

The onboard SATA controller has the following features:

- Controller integrated into the AMD processor
- JBOD only; no RAID support
- Supports up to 12 SATA drives in the SR665
- Supports HDDs and SSDs; can be mixed

For specifications about the RAID adapters and HBAs supported by the SR665, see the ThinkSystem RAID Adapter and HBA Reference, available from:
https://lenovopress.com/lp1288-lenovo-thinksystem-raid-adapter-and-hba-reference#sr665-support=SR665

For more information about each of the adapters, see the product guides in the RAID adapters or HBA sections of the Lenovo Press web site:
https://lenovopress.com/servers/options/raid
https://lenovopress.com/servers/options/hba

Internal drive options

The following tables list the drive options for internal storage of the server.

2.5-inch hot-swap drives:

- 2.5-inch hot-swap 12 Gb SAS HDDs
- 2.5-inch hot-swap 6 Gb SATA HDDs
- 2.5-inch hot-swap 12 Gb SAS SSDs
- 2.5-inch hot-swap 6 Gb SATA SSDs
- 2.5-inch hot-swap PCIe 4.0 NVMe SSDs
- 2.5-inch hot-swap PCIe 3.0 NVMe SSDs

2.5-inch 7mm hot-swap drives:

- 7mm 2.5-inch hot-swap 6 Gb SATA SSDs
- 7mm 2.5-inch hot-swap PCIe 3.0 NVMe SSDs

3.5-inch hot-swap drives:

- 3.5-inch hot-swap 12 Gb SAS HDDs
- 3.5-inch hot-swap 6 Gb SATA HDDs
- 3.5-inch hot-swap 12 Gb SAS SSDs
- 3.5-inch hot-swap 6 Gb SATA SSDs
- 3.5-inch hot-swap PCIe 4.0 NVMe SSDs
- 3.5-inch hot-swap PCIe 3.0 NVMe SSDs

M.2 drives:

- M.2 SATA drives
- M.2 NVMe drives

M.2 drive support: The use of M.2 drives requires an additional adapter as described in the M.2 drives subsection.

Table 37. 2.5-inch hot-swap 12 Gb SAS HDDs

Part number	Feature	Description	Maximum supported
2.5-inch hot-swap HDDs - 12 Gb SAS 10K			
7XB7A00024	AULY	ThinkSystem 2.5" 300GB 10K SAS 12Gb Hot Swap 512n HDD	40
7XB7A00025	AULZ	ThinkSystem 2.5" 600GB 10K SAS 12Gb Hot Swap 512n HDD	40
7XB7A00027	AUM1	ThinkSystem 2.5" 1.2TB 10K SAS 12Gb Hot Swap 512n HDD	40
7XB7A00028	AUM2	ThinkSystem 2.5" 1.8TB 10K SAS 12Gb Hot Swap 512e HDD	40
7XB7A00069	B0YS	ThinkSystem 2.5" 2.4TB 10K SAS 12Gb Hot Swap 512e HDD	40
2.5-inch hot-swap HDDs - 12 Gb SAS 15K			
7XB7A00021	AULV	ThinkSystem 2.5" 300GB 15K SAS 12Gb Hot Swap 512n HDD	40
7XB7A00022	AULW	ThinkSystem 2.5" 600GB 15K SAS 12Gb Hot Swap 512n HDD	40
7XB7A00023	AULX	ThinkSystem 2.5" 900GB 15K SAS 12Gb Hot Swap 512e HDD	40
2.5-inch hot-swap HDDs - 12 Gb NL SAS			
7XB7A00034	AUM6	ThinkSystem 2.5" 1TB 7.2K SAS 12Gb Hot Swap 512n HDD	40
7XB7A00035	AUM7	ThinkSystem 2.5" 2TB 7.2K SAS 12Gb Hot Swap 512n HDD	40
2.5-inch hot-swap SED HDDs - 12 Gb SAS 10K			
7XB7A00031	AUM5	ThinkSystem 2.5" 600GB 10K SAS 12Gb Hot Swap 512n HDD SED	40
7XB7A00033	B0YX	ThinkSystem 2.5" 1.2TB 10K SAS 12Gb Hot Swap 512n HDD SED	40
7XB7A00070	B0YV	ThinkSystem 2.5" 2.4TB 10K SAS 12Gb Hot Swap 512e HDD FIPS	40

Table 38. 2.5-inch hot-swap 6 Gb SATA HDDs

Part number	Feature	Description	Maximum supported
2.5-inch hot-swap HDDs - 6 Gb NL SATA			
7XB7A00036	AUUE	ThinkSystem 2.5" 1TB 7.2K SATA 6Gb Hot Swap 512n HDD	40
7XB7A00037	AUUJ	ThinkSystem 2.5" 2TB 7.2K SATA 6Gb Hot Swap 512e HDD	40

Table 39. 2.5-inch hot-swap 12 Gb SAS SSDs

Part number	Feature	Description	Maximum supported
2.5-inch hot-swap SSDs - 12 Gb SAS - Write Intensive/Performance (10+ DWPD)			
4XB7A70006	BG07	ThinkSystem 2.5" Nytro 3732 400GB Performance SAS 12Gb Hot Swap SSD	40
4XB7A70005	BG06	ThinkSystem 2.5" Nytro 3732 800GB Performance SAS 12Gb Hot Swap SSD	40
4XB7A70004	BG05	ThinkSystem 2.5" Nytro 3732 1.6TB Performance SAS 12Gb Hot Swap SSD	40
4XB7A70003	BG04	ThinkSystem 2.5" Nytro 3732 3.2TB Performance SAS 12Gb Hot Swap SSD	40
2.5-inch hot-swap SSDs - 12 Gb SAS - Mixed Use/Mainstream (3-5 DWPD)			
4XB7A17062	B8HU	ThinkSystem 2.5" PM1645a 800GB Mainstream SAS 12Gb Hot Swap SSD	40
4XB7A17063	B8J4	ThinkSystem 2.5" PM1645a 1.6TB Mainstream SAS 12Gb Hot Swap SSD	40
4XB7A17064	B8JD	ThinkSystem 2.5" PM1645a 3.2TB Mainstream SAS 12Gb Hot Swap SSD	40
4XB7A17065	B8JA	ThinkSystem 2.5" PM1645a 6.4TB Mainstream SAS 12Gb Hot Swap SSD	40
2.5-inch hot-swap SSDs - 12 Gb SAS - Read Intensive/Entry/Capacity (<3 DWPD)			
4XB7A38175	B91A	ThinkSystem 2.5" PM1643a 960GB Entry SAS 12Gb Hot Swap SSD	40
4XB7A38176	B91B	ThinkSystem 2.5" PM1643a 1.92TB Entry SAS 12Gb Hot Swap SSD	40
4XB7A17054	B91C	ThinkSystem 2.5" PM1643a 3.84TB Entry SAS 12Gb Hot Swap SSD	40
4XB7A17055	B91D	ThinkSystem 2.5" PM1643a 7.68TB Entry SAS 12Gb Hot Swap SSD	40
4XB7A17056	BC4R	ThinkSystem 2.5" PM1643a 15.36TB Entry SAS 12Gb Hot Swap SSD	40
2.5-inch hot-swap SED SSDs - 12 Gb SAS - Write Intensive/Performance (10+ DWPD)			
4XB7A70007	BFZZ	ThinkSystem 2.5" Nytro 3732 800GB Performance SAS 12Gb Hot Swap SSD SED	40

Table 40. 2.5-inch hot-swap 6 Gb SATA SSDs

Part number	Feature	Description	Maximum supported
2.5-inch hot-swap SSDs - 6 Gb SATA - Mixed Use/Mainstream (3-5 DWPD)			
4XB7A17125	BA7Q	ThinkSystem 2.5" S4620 480GB Mixed Use SATA 6Gb HS SSD	40
4XB7A17126	BA4T	ThinkSystem 2.5" S4620 960GB Mixed Use SATA 6Gb HS SSD	40
4XB7A17127	BA4U	ThinkSystem 2.5" S4620 1.92TB Mixed Use SATA 6Gb HS SSD	40
4XB7A17128	BK7L	ThinkSystem 2.5" S4620 3.84TB Mixed Use SATA 6Gb HS SSD	40
4XB7A17087	B8J1	ThinkSystem 2.5" 5300 240GB Mainstream SATA 6Gb Hot Swap SSD	40
4XB7A17088	B8HY	ThinkSystem 2.5" 5300 480GB Mainstream SATA 6Gb Hot Swap SSD	40
4XB7A17089	B8J6	ThinkSystem 2.5" 5300 960GB Mainstream SATA 6Gb Hot Swap SSD	40
4XB7A17090	B8JE	ThinkSystem 2.5" 5300 1.92TB Mainstream SATA 6Gb Hot Swap SSD	40
4XB7A17091	B8J7	ThinkSystem 2.5" 5300 3.84TB Mainstream SATA 6Gb Hot Swap SSD	40
4XB7A13633	B49L	ThinkSystem 2.5" S4610 240GB Mixed Use SATA 6Gb HS SSD	40
4XB7A13634	B49M	ThinkSystem 2.5" S4610 480GB Mixed Use SATA 6Gb HS SSD	40
4XB7A13635	B49N	ThinkSystem 2.5" S4610 960GB Mixed Use SATA 6Gb HS SSD	40

Part number	Feature	Description	Maximum supported
4XB7A13636	B49P	ThinkSystem 2.5" S4610 1.92TB Mixed Use SATA 6Gb HS SSD	40
4XB7A13637	B49Q	ThinkSystem 2.5" S4610 3.84TB Mixed Use SATA 6Gb HS SSD	40
2.5-inch hot-swap SSDs - 6 Gb SATA - Read Intensive/Entry (<3 DWPD)			
4XB7A72438	BM8B	ThinkSystem 2.5" PM893 480GB Read Intensive SATA 6Gb HS SSD	40
4XB7A72439	BM8A	ThinkSystem 2.5" PM893 960GB Read Intensive SATA 6Gb HS SSD	40
4XB7A72440	BM89	ThinkSystem 2.5" PM893 1.92TB Read Intensive SATA 6Gb HS SSD	40
4XB7A72441	BM88	ThinkSystem 2.5" PM893 3.84TB Read Intensive SATA 6Gb HS SSD	40
4XB7A72442	BM87	ThinkSystem 2.5" PM893 7.68TB Read Intensive SATA 6Gb HS SSD	40
4XB7A17072	B99D	ThinkSystem 2.5" S4520 240GB Read Intensive SATA 6Gb HS SSD	40
4XB7A17101	BA7G	ThinkSystem 2.5" S4520 480GB Read Intensive SATA 6Gb HS SSD	40
4XB7A17102	BA7H	ThinkSystem 2.5" S4520 960GB Read Intensive SATA 6Gb HS SSD	40
4XB7A17103	BA7J	ThinkSystem 2.5" S4520 1.92TB Read Intensive SATA 6Gb HS SSD	40
4XB7A17104	BK77	ThinkSystem 2.5" S4520 3.84TB Read Intensive SATA 6Gb HS SSD	40
4XB7A17105	BK78	ThinkSystem 2.5" S4520 7.68TB Read Intensive SATA 6Gb HS SSD	40
4XB7A38271	BCTC	ThinkSystem 2.5" Multi Vendor 240GB Entry SATA 6Gb Hot Swap SSD	40
4XB7A38272	BCTD	ThinkSystem 2.5" Multi Vendor 480GB Entry SATA 6Gb Hot Swap SSD	40
4XB7A38273	BCTE	ThinkSystem 2.5" Multi Vendor 960GB Entry SATA 6Gb Hot Swap SSD	40
4XB7A38274	BCTF	ThinkSystem 2.5" Multi Vendor 1.92TB Entry SATA 6Gb Hot Swap SSD	40
4XB7A38275	BCTG	ThinkSystem 2.5" Multi Vendor 3.84TB Entry SATA 6Gb Hot Swap SSD	40
4XB7A17075	B8HV	ThinkSystem 2.5" 5300 240GB Entry SATA 6Gb Hot Swap SSD	40
4XB7A17076	B8JM	ThinkSystem 2.5" 5300 480GB Entry SATA 6Gb Hot Swap SSD	40
4XB7A17077	B8HP	ThinkSystem 2.5" 5300 960GB Entry SATA 6Gb Hot Swap SSD	40
4XB7A17078	B8J5	ThinkSystem 2.5" 5300 1.92TB Entry SATA 6Gb Hot Swap SSD	40
4XB7A17079	B8JP	ThinkSystem 2.5" 5300 3.84TB Entry SATA 6Gb Hot Swap SSD	40
4XB7A17080	B8J2	ThinkSystem 2.5" 5300 7.68TB Entry SATA 6Gb Hot Swap SSD	40
4XB7A38185	B9AC	ThinkSystem 2.5" 5210 960GB Entry SATA 6Gb Hot Swap QLC SSD	40
4XB7A38144	B7EW	ThinkSystem 2.5" 5210 1.92TB Entry SATA 6Gb Hot Swap QLC SSD	40
4XB7A38145	B7EX	ThinkSystem 2.5" 5210 3.84TB Entry SATA 6Gb Hot Swap QLC SSD	40
4XB7A38146	B7EY	ThinkSystem 2.5" 5210 7.68TB Entry SATA 6Gb Hot Swap QLC SSD	40
4XB7A10247	B498	ThinkSystem 2.5" S4510 240GB Read Intensive SATA 6Gb HS SSD	40
4XB7A10248	B499	ThinkSystem 2.5" S4510 480GB Read Intensive SATA 6Gb HS SSD	40
4XB7A10249	B49A	ThinkSystem 2.5" S4510 960GB Read Intensive SATA 6Gb HS SSD	40
4XB7A13622	B49B	ThinkSystem 2.5" S4510 1.92TB Read Intensive SATA 6Gb HS SSD	40
4XB7A13623	B49C	ThinkSystem 2.5" S4510 3.84TB Read Intensive SATA 6Gb HS SSD	40
2.5-inch hot-swap SED SSDs - 6 Gb SATA - Mixed Use/Mainstream (3-5 DWPD)			
4XB7A13972	BNEW	ThinkSystem 2.5" 5300 960GB Mainstream SATA 6Gb Hot Swap SSD SED	40
4XB7A38193	B93K	ThinkSystem 2.5" 5300 1.92TB Mainstream SATA 6Gb Hot Swap SSD SED	40
4XB7A64222	BEMB	ThinkSystem 2.5" 5300 3.84TB Mainstream SATA 6Gb Hot Swap SSD SED	40
2.5-inch hot-swap SED SSDs - 6 Gb SATA - Read Intensive/Entry (<3 DWPD)			
4XB7A38141	BE29	ThinkSystem 2.5" 5300 960GB Entry SATA 6Gb Hot Swap SSD SED	40

Part number	Feature	Description	Maximum supported
4XB7A38191	B93L	ThinkSystem 2.5" 5300 3.84TB Entry SATA 6Gb Hot Swap SSD SED	40
4XB7A38192	B93M	ThinkSystem 2.5" 5300 7.68TB Entry SATA 6Gb Hot Swap SSD SED	40

Table 41. 2.5-inch hot-swap PCIe 4.0 NVMe SSDs

Part number	Feature	Description	Maximum supported
2.5-inch SSDs - U.2 PCIe 4.0 NVMe - Mixed Use/Mainstream (3-5 DWPD)			
4XB7A17152	BCFV	ThinkSystem 2.5" U.2 P5600 1.6TB Mixed Use NVMe PCIe 4.0 x4 HS SSD	32
4XB7A17153	BCFR	ThinkSystem 2.5" U.2 P5600 3.2TB Mixed Use NVMe PCIe 4.0 x4 HS SSD	32
4XB7A17154	BCFS	ThinkSystem 2.5" U.2 P5600 6.4TB Mixed Use NVMe PCIe 4.0 x4 HS SSD	32
2.5-inch SSDs - U.3 PCIe 4.0 NVMe - Mixed Use/Mainstream (3-5 DWPD)			
4XB7A64175	BE03	ThinkSystem U.3 Kioxia CM6-V 800GB Mainstream NVMe PCIe 4.0 x4 Hot Swap SSD	32*
4XB7A17112	B96Z	ThinkSystem U.3 Kioxia CM6-V 1.6TB Mainstream NVMe PCIe4.0 x4 Hot Swap SSD	32*
4XB7A17113	B96T	ThinkSystem U.3 Kioxia CM6-V 3.2TB Mainstream NVMe PCIe4.0 x4 Hot Swap SSD	32*
4XB7A17114	B96P	ThinkSystem U.3 Kioxia CM6-V 6.4TB Mainstream NVMe PCIe4.0 x4 Hot Swap SSD	32*
2.5-inch SSDs - U.2 PCIe 4.0 NVMe - Read Intensive/Entry (<3 DWPD)			
4XB7A79697	BNM6	ThinkSystem 2.5" U.2 PM9A3 3.84TB Read Intensive NVMe PCIe 4.0 x4 HS SSD	32
4XB7A17145	BCFT	ThinkSystem 2.5" U.2 P5500 1.92TB Read Intensive NVMe PCIe 4.0 x4 HS SSD	32
4XB7A17146	BCFW	ThinkSystem 2.5" U.2 P5500 3.84TB Read Intensive NVMe PCIe 4.0 x4 HS SSD	32
4XB7A17147	BCFU	ThinkSystem 2.5" U.2 P5500 7.68TB Read Intensive NVMe PCIe 4.0 x4 HS SSD	32
4XB7A38196	BC4Y	ThinkSystem U.2 PM1733 1.92TB Entry NVMe PCIe 4.0 x4 Hot Swap SSD	32
4XB7A38197	BC4Z	ThinkSystem U.2 PM1733 3.84TB Entry NVMe PCIe 4.0 x4 Hot Swap SSD	32
4XB7A38283	BE2E	ThinkSystem U.2 PM1733 7.68TB Entry NVMe PCIe 4.0 x4 Hot Swap SSD	32
4XB7A38284	BE2F	ThinkSystem U.2 PM1733 15.36TB Entry NVMe PCIe 4.0 x4 Hot Swap SSD	32
2.5-inch SSDs - U.3 PCIe 4.0 NVMe - Read Intensive/Entry (<3 DWPD)			
4XB7A64141	BE2G	ThinkSystem U.3 Kioxia CM6-R 3.84TB Entry NVMe PCIe 4.0 x4 Hot Swap SSD	32*
4XB7A64142	BE2H	ThinkSystem U.3 Kioxia CM6-R 7.68TB Entry NVMe PCIe 4.0 x4 Hot Swap SSD	32*
2.5-inch SED SSDs - U.2 PCIe 4.0 NVMe - Read Intensive/Entry (<3 DWPD)			
4XB7A38257	BE2A	ThinkSystem U.2 PM1733 3.84TB Entry NVMe PCIe 4.0 x4 Hot Swap SSD SED	32
4XB7A38258	BE2B	ThinkSystem U.2 PM1733 7.68TB Entry NVMe PCIe 4.0 x4 Hot Swap SSD SED	32
2.5-inch SED SSDs - U.3 PCIe 4.0 NVMe - Read Intensive/Entry (<3 DWPD)			
4XB7A38269	BE2C	ThinkSystem U.3 Kioxia CM6-R 3.84TB Entry NVMe PCIe 4.0 x4 Hot Swap SSD SED	32*
4XB7A38270	BE2D	ThinkSystem U.3 Kioxia CM6-R 7.68TB Entry NVMe PCIe 4.0 x4 Hot Swap SSD SED	32*

* CM5 and CM6 drives are not supported with the ThinkSystem 4-Port PCIe Gen4 NVMe Retimer Adapter, 4C57A65446

Table 42. 2.5-inch hot-swap PCIe 3.0 NVMe SSDs

Part number	Feature	Description	Maximum supported
2.5-inch SSDs - U.2 PCIe 3.0 NVMe - Mixed Use/Mainstream (3-5 DWPD)			
4XB7A13936	B589	ThinkSystem U.2 Intel P4610 1.6TB Mainstream NVMe PCIe3.0 x4 Hot Swap SSD	32
4XB7A08518	B21Y	ThinkSystem U.2 Toshiba CM5-V 3.2TB Mainstream NVMe PCIe 3.0 x4 Hot Swap SSD	32*
2.5-inch SSDs - U.2 PCIe 3.0 NVMe - Read Intensive/Entry (<3 DWPD)			
4XB7A10204	B58G	ThinkSystem 2.5" U.2 P4510 2.0TB Read Intensive NVMe PCIe 3.0 x4 HS SSD	32
4XB7A10205	B58H	ThinkSystem U.2 Intel P4510 4.0TB Entry NVMe PCIe3.0 x4 Hot Swap SSD	32
4XB7A08513	B58J	ThinkSystem U.2 Intel P4510 8.0TB Entry NVMe PCIe3.0 x4 Hot Swap SSD	32
4XB7A10175	B34N	ThinkSystem U.2 PM983 1.92TB Entry NVMe PCIe 3.0 x4 Hot Swap SSD	32
4XB7A10176	B34P	ThinkSystem U.2 PM983 3.84TB Entry NVMe PCIe 3.0 x4 Hot Swap SSD	32

* CM5 and CM6 drives are not supported with the ThinkSystem 4-Port PCIe Gen4 NVMe Retimer Adapter, 4C57A65446

Note: NVMe PCIe SSDs support surprise hot removal and hot insertion, provided the operating system supports PCIe SSD hot-swap.

Table 43. 7mm 2.5-inch hot-swap 6 Gb SATA SSDs

Part number	Feature	Description	Maximum supported
7mm 2.5-inch hot-swap SSDs - 6 Gb SATA - Read Intensive/Entry (<3 DWPD)			
4XB7A17106	BK79	ThinkSystem 7mm S4520 240GB Read Intensive SATA 6Gb HS SSD	2
4XB7A17107	BK7A	ThinkSystem 7mm S4520 480GB Read Intensive SATA 6Gb HS SSD	2
4XB7A17108	BK7B	ThinkSystem 7mm S4520 960GB Read Intensive SATA 6Gb HS SSD	2
4XB7A38181	B8JQ	ThinkSystem 7mm 5300 240GB Entry SATA 6Gb SSD	2
4XB7A38182	B8JT	ThinkSystem 7mm 5300 480GB Entry SATA 6Gb SSD	2
4XB7A38183	B8JS	ThinkSystem 7mm 5300 960GB Entry SATA 6Gb SSD	2

Table 44. 7mm 2.5-inch hot-swap PCIe 3.0 NVMe SSDs

Part number	Feature	Description	Maximum supported
7mm 2.5-inch hot-swap SSDs - PCIe 3.0 NVMe - Read Intensive/Entry (<3 DWPD)			
4XB7A38216	BB63	ThinkSystem 7mm PM983 960GB Entry NVMe PCIe 3.0 x4 Hot Swap SSD	2

Note: NVMe PCIe SSDs support surprise hot removal and hot insertion, provided the operating system supports PCIe SSD hot-swap.

Table 45. 3.5-inch hot-swap 12 Gb SAS HDDs

Part number	Feature	Description	Maximum supported
3.5-inch hot-swap HDDs - 12 Gb SAS 15K			
7XB7A00038	AUU2	ThinkSystem 3.5" 300GB 15K SAS 12Gb Hot Swap 512n HDD	20
7XB7A00039	AUU3	ThinkSystem 3.5" 600GB 15K SAS 12Gb Hot Swap 512n HDD	20
7XB7A00040	AUUC	ThinkSystem 3.5" 900GB 15K SAS 12Gb Hot Swap 512e HDD	20
3.5-inch hot-swap HDDs - 12 Gb NL SAS			
7XB7A00042	AUU5	ThinkSystem 3.5" 2TB 7.2K SAS 12Gb Hot Swap 512n HDD	20
7XB7A00043	AUU6	ThinkSystem 3.5" 4TB 7.2K SAS 12Gb Hot Swap 512n HDD	20
7XB7A00044	AUU7	ThinkSystem 3.5" 6TB 7.2K SAS 12Gb Hot Swap 512e HDD	20
7XB7A00045	B0YR	ThinkSystem 3.5" 8TB 7.2K SAS 12Gb Hot Swap 512e HDD	20
7XB7A00046	AUUG	ThinkSystem 3.5" 10TB 7.2K SAS 12Gb Hot Swap 512e HDD	20
7XB7A00067	B117	ThinkSystem 3.5" 12TB 7.2K SAS 12Gb Hot Swap 512e HDD	20
4XB7A13906	B496	ThinkSystem 3.5" 14TB 7.2K SAS 12Gb Hot Swap 512e HDD	20
4XB7A13911	B7EZ	ThinkSystem 3.5" 16TB 7.2K SAS 12Gb Hot Swap 512e HDD	20
4XB7A38266	BCFP	ThinkSystem 3.5" 18TB 7.2K SAS 12Gb Hot Swap 512e HDD	20
3.5-inch hot-swap SED HDDs - 12 Gb NL SAS			
7XB7A00047	AUUH	ThinkSystem 3.5" 4TB 7.2K SAS 12Gb Hot Swap 512n HDD FIPS	20
7XB7A00066	B0YQ	ThinkSystem 3.5" 8TB 7.2K SAS 12Gb Hot Swap 512e HDD FIPS	20

Table 46. 3.5-inch hot-swap 6 Gb SATA HDDs

Part number	Feature	Description	Maximum supported
3.5-inch hot-swap HDDs - 6 Gb NL SATA			
7XB7A00049	AUUF	ThinkSystem 3.5" 1TB 7.2K SATA 6Gb Hot Swap 512n HDD	20
7XB7A00050	AUUD	ThinkSystem 3.5" 2TB 7.2K SATA 6Gb Hot Swap 512n HDD	20
7XB7A00051	AUU8	ThinkSystem 3.5" 4TB 7.2K SATA 6Gb Hot Swap 512n HDD	20
7XB7A00052	AUUA	ThinkSystem 3.5" 6TB 7.2K SATA 6Gb Hot Swap 512e HDD	20
7XB7A00053	AUU9	ThinkSystem 3.5" 8TB 7.2K SATA 6Gb Hot Swap 512e HDD	20
7XB7A00054	AUUB	ThinkSystem 3.5" 10TB 7.2K SATA 6Gb Hot Swap 512e HDD	20
7XB7A00068	B118	ThinkSystem 3.5" 12TB 7.2K SATA 6Gb Hot Swap 512e HDD	20
4XB7A13907	B497	ThinkSystem 3.5" 14TB 7.2K SATA 6Gb Hot Swap 512e HDD	20
4XB7A13914	B7F0	ThinkSystem 3.5" 16TB 7.2K SATA 6Gb Hot Swap 512e HDD	20
4XB7A38130	BCFH	ThinkSystem 3.5" 18TB 7.2K SATA 6Gb Hot Swap 512e HDD	20

Table 47. 3.5-inch hot-swap 12 Gb SAS SSDs

Part number	Feature	Description	Maximum supported
4XB7A70011	BG03	ThinkSystem 3.5" Nytro 3732 400GB Performance SAS 12Gb Hot Swap SSD	20
4XB7A70010	BG02	ThinkSystem 3.5" Nytro 3732 800GB Performance SAS 12Gb Hot Swap SSD	20
4XB7A70009	BG01	ThinkSystem 3.5" Nytro 3732 1.6TB Performance SAS 12Gb Hot Swap SSD	20
4XB7A70008	BG00	ThinkSystem 3.5" Nytro 3732 3.2TB Performance SAS 12Gb Hot Swap SSD	20
3.5-inch hot-swap SSDs - 12 Gb SAS - Mixed Use/Mainstream (3-5 DWPD)			
4XB7A17066	B8HT	ThinkSystem 3.5" PM1645a 800GB Mainstream SAS 12Gb Hot Swap SSD	20
4XB7A17043	B8JN	ThinkSystem 3.5" PM1645a 1.6TB Mainstream SAS 12Gb Hot Swap SSD	20
4XB7A17067	B8JK	ThinkSystem 3.5" PM1645a 3.2TB Mainstream SAS 12Gb Hot Swap SSD	20
4XB7A17068	B8JG	ThinkSystem 3.5" PM1645a 6.4TB Mainstream SAS 12Gb Hot Swap SSD	20
3.5-inch hot-swap SSDs - 12 Gb SAS - Read Intensive/Entry/Capacity (<3 DWPD)			
4XB7A17058	B91E	ThinkSystem 3.5" PM1643a 3.84TB Entry SAS 12Gb Hot Swap SSD	20
4XB7A17059	BEVK	ThinkSystem 3.5" PM1643a 7.68TB Entry SAS 12Gb Hot Swap SSD	20

Table 48. 3.5-inch hot-swap 6 Gb SATA SSDs

Part number	Feature	Description	Maximum supported
3.5-inch hot-swap SSDs - 6 Gb SATA - Mixed Use/Mainstream (3-5 DWPD)			
4XB7A17137	BA4W	ThinkSystem 3.5" S4620 480GB Mixed Use SATA 6Gb HS SSD	20
4XB7A17138	BA4X	ThinkSystem 3.5" S4620 960GB Mixed Use SATA 6Gb HS SSD	20
4XB7A17139	BA4Y	ThinkSystem 3.5" S4620 1.92TB Mixed Use SATA 6Gb HS SSD	20
4XB7A17140	BK7P	ThinkSystem 3.5" S4620 3.84TB Mixed Use SATA 6Gb HS SSD	20
4XB7A17096	B8JL	ThinkSystem 3.5" 5300 240GB Mainstream SATA 6Gb Hot Swap SSD	20
4XB7A17097	B8JF	ThinkSystem 3.5" 5300 480GB Mainstream SATA 6Gb Hot Swap SSD	20
4XB7A17098	B8J0	ThinkSystem 3.5" 5300 960GB Mainstream SATA 6Gb Hot Swap SSD	20
4XB7A17099	B8HR	ThinkSystem 3.5" 5300 1.92TB Mainstream SATA 6Gb Hot Swap SSD	20
4XB7A17100	B8HX	ThinkSystem 3.5" 5300 3.84TB Mainstream SATA 6Gb Hot Swap SSD	20
4XB7A13639	B49R	ThinkSystem 3.5" S4610 240GB Mixed Use SATA 6Gb HS SSD	20
4XB7A13640	B49S	ThinkSystem 3.5" S4610 480GB Mixed Use SATA 6Gb HS SSD	20
4XB7A13641	B49T	ThinkSystem 3.5" S4610 960GB Mixed Use SATA 6Gb HS SSD	20
4XB7A13642	B49U	ThinkSystem 3.5" S4610 1.92TB Mixed Use SATA 6Gb HS SSD	20
4XB7A13643	B49V	ThinkSystem 3.5" S4610 3.84TB Mixed Use SATA 6Gb HS SSD	20
3.5-inch hot-swap SSDs - 6 Gb SATA - Read Intensive/Entry (<3 DWPD)			
4XB7A17118	BA7K	ThinkSystem 3.5" S4520 240GB Read Intensive SATA 6Gb HS SSD	20
4XB7A17119	BA7L	ThinkSystem 3.5" S4520 480GB Read Intensive SATA 6Gb HS SSD	20
4XB7A17120	BA7M	ThinkSystem 3.5" S4520 960GB Read Intensive SATA 6Gb HS SSD	20
4XB7A17121	BA7N	ThinkSystem 3.5" S4520 1.92TB Read Intensive SATA 6Gb HS SSD	20
4XB7A17122	BK7F	ThinkSystem 3.5" S4520 3.84TB Read Intensive SATA 6Gb HS SSD	20
4XB7A17123	BK7G	ThinkSystem 3.5" S4520 7.68TB Read Intensive SATA 6Gb HS SSD	20
4XB7A38276	BCTH	ThinkSystem 3.5" Multi Vendor 240GB Entry SATA 6Gb Hot Swap SSD	20
4XB7A38277	BCTJ	ThinkSystem 3.5" Multi Vendor 480GB Entry SATA 6Gb Hot Swap SSD	20
4XB7A38278	BCTK	ThinkSystem 3.5" Multi Vendor 960GB Entry SATA 6Gb Hot Swap SSD	20
4XB7A38279	BCTL	ThinkSystem 3.5" Multi Vendor 1.92TB Entry SATA 6Gb Hot Swap SSD	20
4XB7A38281	BCTM	ThinkSystem 3.5" Multi Vendor 3.84TB Entry SATA 6Gb Hot Swap SSD	20
4XB7A17081	B8JB	ThinkSystem 3.5" 5300 240GB Entry SATA 6Gb Hot Swap SSD	20
4XB7A17082	B8J9	ThinkSystem 3.5" 5300 480GB Entry SATA 6Gb Hot Swap SSD	20
4XB7A17083	B8JC	ThinkSystem 3.5" 5300 960GB Entry SATA 6Gb Hot Swap SSD	20
4XB7A17084	B8HZ	ThinkSystem 3.5" 5300 1.92TB Entry SATA 6Gb Hot Swap SSD	20
4XB7A17085	B8HQ	ThinkSystem 3.5" 5300 3.84TB Entry SATA 6Gb Hot Swap SSD	20
4XB7A17086	B8J3	ThinkSystem 3.5" 5300 7.68TB Entry SATA 6Gb Hot Swap SSD	20
4XB7A13625	B49D	ThinkSystem 3.5" S4510 240GB Read Intensive SATA 6Gb HS SSD	20
4XB7A13626	B49E	ThinkSystem 3.5" S4510 480GB Read Intensive SATA 6Gb HS SSD	20
4XB7A13627	B49F	ThinkSystem 3.5" S4510 960GB Read Intensive SATA 6Gb HS SSD	20
4XB7A13628	B49G	ThinkSystem 3.5" S4510 1.92TB Read Intensive SATA 6Gb HS SSD	20
4XB7A13629	B49H	ThinkSystem 3.5" S4510 3.84TB Read Intensive SATA 6Gb HS SSD	20

Table 49. 3.5-inch hot-swap PCIe 4.0 NVMe SSDs

Part number	Feature	Description	Maximum supported
3.5-inch SSDs - U.2 PCIe 4.0 NVMe - Mixed Use/Mainstream (3-5 DWPD)			
4XB7A17155	BCFM	ThinkSystem 3.5" U.2 P5600 1.6TB Mixed Use NVMe PCIe 4.0 x4 HS SSD	12
4XB7A17156	BCFJ	ThinkSystem 3.5" U.2 P5600 3.2TB Mixed Use NVMe PCIe 4.0 x4 HS SSD	12
4XB7A17157	BCFQ	ThinkSystem 3.5" U.2 P5600 6.4TB Mixed Use NVMe PCIe 4.0 x4 HS SSD	12
3.5-inch SSDs - U.3 PCIe 4.0 NVMe - Mixed Use/Mainstream (3-5 DWPD)			
4XB7A64176	BE04	ThinkSystem 3.5" Kioxia CM6-V 800GB Mainstream NVMe PCIe 4.0 x4 Hot Swap SSD	12*
4XB7A17115	B96V	ThinkSystem 3.5" Kioxia CM6-V 1.6TB Mainstream NVMe PCIe4.0 x4 Hot Swap SSD	12*
4XB7A17116	B96K	ThinkSystem 3.5" Kioxia CM6-V 3.2TB Mainstream NVMe PCIe4.0 x4 Hot Swap SSD	12*
4XB7A17117	B96W	ThinkSystem 3.5" Kioxia CM6-V 6.4TB Mainstream NVMe PCIe4.0 x4 Hot Swap SSD	12*

* CM5 and CM6 drives are not supported with the ThinkSystem 4-Port PCIe Gen4 NVMe Retimer Adapter, 4C57A65446

Note: NVMe PCIe SSDs support surprise hot removal and hot insertion, provided the operating system supports PCIe SSD hot-swap.

Table 50. 3.5-inch hot-swap PCIe 3.0 NVMe SSDs

Part number	Feature	Description	Maximum supported
3.5-inch SSDs - U.2 PCIe 3.0 NVMe - Mixed Use/Mainstream (3-5 DWPD)			
4XB7A13944	B58C	ThinkSystem 3.5" Intel P4610 1.6TB Mainstream NVMe PCIe3.0 x4 Hot Swap SSD	12
4XB7A08534	B221	ThinkSystem 3.5" Toshiba CM5-V 3.2TB Mainstream NVMe PCIe 3.0 x4 Hot Swap SSD	12*
3.5-inch SSDs - U.2 PCIe 3.0 NVMe - Read Intensive/Entry (<3 DWPD)			
4XB7A10178	B34Q	ThinkSystem 3.5" PM983 1.92TB Entry NVMe PCIe 3.0 x4 Hot Swap SSD	12
4XB7A10179	B34R	ThinkSystem 3.5" PM983 3.84TB Entry NVMe PCIe 3.0 x4 Hot Swap SSD	12

* CM5 and CM6 drives are not supported with the ThinkSystem 4-Port PCIe Gen4 NVMe Retimer Adapter, 4C57A65446

Note: NVMe PCIe SSDs support surprise hot removal and hot insertion, provided the operating system supports PCIe SSD hot-swap.

Table 51. M.2 SATA drives

Part number	Feature	Description	Maximum supported
M.2 SSDs - 6 Gb SATA - Read Intensive/Entry (<3 DWPD)			
7N47A00129	AUUL	ThinkSystem M.2 32GB SATA 6Gbps Non-Hot Swap SSD	2
7N47A00130	AUUV	ThinkSystem M.2 128GB SATA 6Gbps Non-Hot Swap SSD	2
4XB7A17071	B8HS	ThinkSystem M.2 5300 240GB SATA 6Gbps Non-Hot Swap SSD	2
4XB7A17073	B919	ThinkSystem M.2 5300 480GB SATA 6Gbps Non-Hot Swap SSD	2
4XB7A17074	B8JJ	ThinkSystem M.2 5300 960GB SATA 6Gbps Non-Hot Swap SSD	2

Table 52. M.2 NVMe drives

Part number	Feature	Description	Maximum supported
M.2 SSDs - NVMe - Read Intensive/Entry (<3 DWPD)			
4XB7A38177	B8JR	ThinkSystem M.2 PM983 960GB NVMe PCIe 3.0 x4 Non-Hot Swap SSD	2

USB memory key

For general portable storage needs, the server also supports the USB memory key option that is listed in the following table.

Table 53. USB memory key

Part number	Feature	Description
4X77A08621	B8NV	ThinkSystem 32GB USB Flash Drive

Internal backup units

The server does not supports any internal backup units, such as tape drives or RDX drives. External backup units are available as described in the External backup units section.

Optical drives

The server supports the external USB optical drive listed in the following table.

Table 54. External optical drive

Part number	Feature code	Description
7XA7A05926	AVV8	ThinkSystem External USB DVD RW Optical Disk Drive

The drive is based on the Lenovo Slim DVD Burner DB65 drive and supports the following formats: DVD-RAM, DVD-RW, DVD+RW, DVD+R, DVD-R, DVD-ROM, DVD-R DL, CD-RW, CD-R, CD-ROM.

I/O expansion

The server supports a total of up to 8 PCIe 4.0 slots, all full-height and all with rear access, plus a dedicated OCP 3.0 SFF slot for networking. Slot availability is based on riser selection. The use of slots 4-8 requires that both processors be installed.

The slots are provided by riser cards:

- Riser 1: Slots 1, 2 and 3 (CPU 1)
- Riser 2: Slots 4, 5, and 6 (CPU 2)
- Riser 3: Slot 7 (CPU 1), and Slot 8 (CPU 2)

NVMe support: The use of Riser 3 is mutually exclusive to onboard NVMe support as they use the same PCIe connectors. See the System architecture section.

The slots in each riser are either PCIe 4.0 x16 or PCIe 4.0 x8 depending on the riser card selected as listed in the table below. All x8 slots are physically x16 slots. Riser 1 and Riser 2 are also available with PCIe 3.0 adapter slots, using a lower-cost PCIe 3.0 riser, if desired.

As discussed in the Internal storage section, the server supports drive bays in the rear of the server. Depending on the drive bays selected, the number of slots available for adapters is reduced. The figure below shows the supported combinations of slots and drive bays.

Tip: For configurations with 2.5-inch front drive bays, an internal RAID adapter or HBA can be installed in a dedicated space and cabled to a PCIe 4.0 x8 connector, thereby freeing up a slot for other purposes.

The following figure shows the locations of the rear-accessible slots for each configuration selection. The OCP slot in located in the lower-left corner.

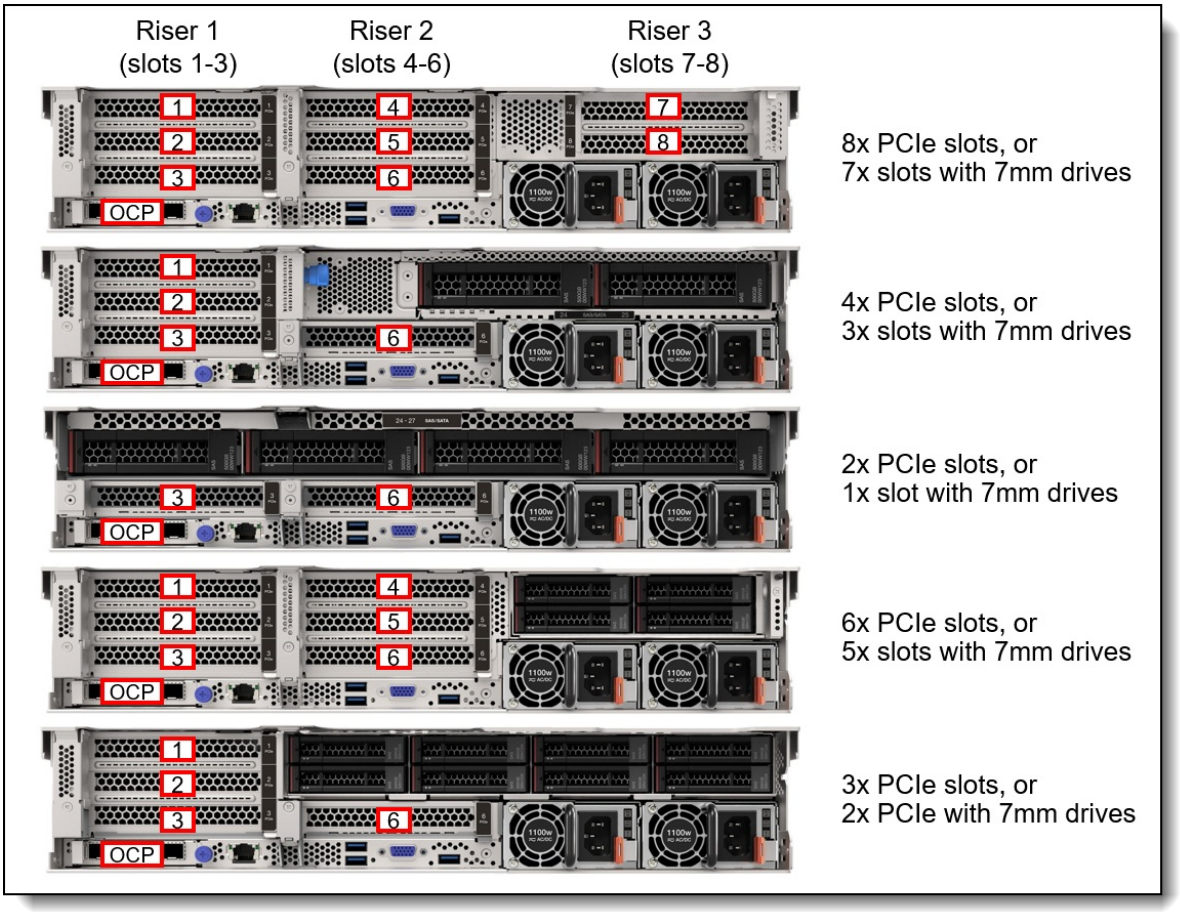

Figure 15. SR665 slot configurations

The following table lists the riser slots available for CTO builds.

Tip: It is also possible to not have any slot selections, in which case slot fillers will be derived in the configurator. Slots can be added later as field upgrades using option part numbers as listed in the Field upgrades table.

Table 55. Riser cards

Feature code	Description	Slot configuration*			Purpose
Riser 1		**Slot 1**	**Slot 2**	**Slot 3**	
B8LJ	2U PCIe Gen4 x16/x8/x8 Riser 1 or 2	Gen4 x16	Gen4 x8	Gen4 x8	3 slots PCIe 4.0
B8LL	2U PCIe Gen3 x16/x8/x8 Riser 1 or 2	Gen3 x16	Gen3 x8	Gen3 x8	3 slots PCIe 3.0
B8LQ	2U PCIe Gen4 x16/x16 Slot 1&2 Riser 1 or 2	Gen4 x16	Gen4 x16	No slot	COM port or 7mm drives in slot 3
B8LR	2U PCIe Gen4 x16/x16 Slot 2&3 Riser 1 or 2	No slot	Gen4 x16	Gen4 x16	Double-wide GPU in slot 2
B8LS	2U PCIe Gen4 x16 Riser 1 or 2	No slot	No slot	Gen4 x16	For 4x 3.5-inch drives
Riser 2		**Slot 4**	**Slot 5**	**Slot 6**	
B8LJ	2U PCIe Gen4 x16/x8/x8 Riser 1 or 2	Gen4 x16	Gen4 x8	Gen4 x8	3 slots PCIe 4.0
B8LL	2U PCIe Gen3 x16/x8/x8 Riser 1 or 2	Gen3 x16	Gen3 x8	Gen3 x8	3 slots PCIe 3.0
B8LQ	2U PCIe Gen4 x16/x16 Slot 1&2 Riser 1 or 2	Gen4 x16	Gen4 x16	No slot	COM port or 7mm drives in slot 6
B8LR	2U PCIe Gen4 x16/x16 Slot 2&3 Riser 1 or 2	No slot	Gen4 x16	Gen4 x16	Double-wide GPU in slot 5
B8LS	2U PCIe Gen4 x16 Riser 1 or 2	No slot	No slot	Gen4 x16	For 2x or 4x 3.5-inch drives
Riser 3		**Slot 7**	**Slot 8**		
B8MK	2U PCIe Gen4 x16/x16 PCIe Riser 3	Gen4 x16	Gen4 x16		2x PCIe 4.0 x16 slots
B97Z	2U PCIe Gen4 x8/x8 PCIe Riser 3	Gen4 x8	Gen4 x8		2x PCIe 4.0 x8 slots

* All PCIe x8 slots are physically x16 slots

Serial port

The SR665 optionally supports a RS-232 serial port by adding a COM port bracket to either slot 3 or slot 6. Ordering information is shown in the following table.

Table 56. Serial port

Part number	Feature code	Description
4Z17A80446	BMNJ	ThinkSystem COM Port Upgrade Kit v2
7Z17A02577	AUSL	ThinkSystem COM Port Upgrade Kit

The bracket is shown in the following figure.

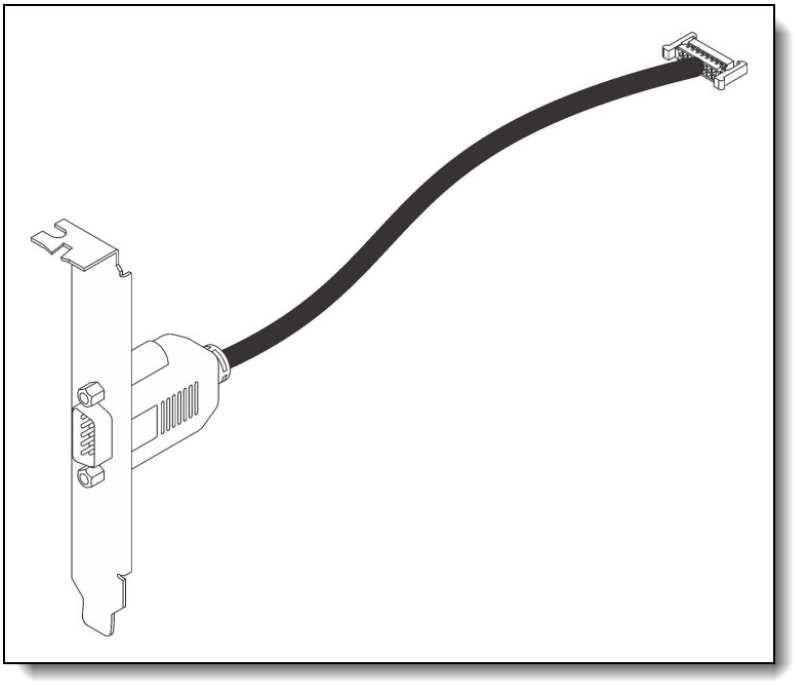

Figure 16. ThinkSystem COM Port Upgrade Kit

Field upgrades

Slot configurations can also be ordered as field upgrades using option part numbers, as listed in the following table.

Tip: If you want to add both a 7mm drive enclosure plus PCIe slots in slot 4 and 5, you will need to order the 7mm drive option (either 4XH7A60927 or 4XH7A60928) plus the 2U x16/x16/E PCIe G4 Riser 1/2 Kit, 4XH7A09878. The latter part number provides the 2-slot riser card.

Table 57. Field upgrades for PCIe slots

Part number	Description and contents	Maximum Supported
Riser 1 & 2 field upgrades		
4XH7A61079	ThinkSystem SR650 V2/SR665 x16/x8/x8 PCIe G4 Riser1/2 Option Kit v2 ● 3-Slot Riser Cage (full-height slots) ● 3-Slot PCIe 4.0 (x16+x8+x8) Riser Card	2
4XH7A61080	ThinkSystem SR650 V2/SR665 x16/x8/x8 PCIe G3 Riser 1/2 Option Kit v2 ● 3-Slot Riser Cage (full-height slots) ● 3-Slot PCIe 3.0 (x16+x8+x8) Riser Card	2
4XH7A61081	ThinkSystem SR650 V2/SR665 x16/x16/E PCIe G4 Riser 1/2 Option Kit v2 ● 3-Slot Riser Cage (full-height slots) ● 2-Slot PCIe 4.0 (x16+x16+Empty) Riser Card	2
4XH7A09880	ThinkSystem SR650 V2/SR665 x16 PCIe G4 Riser 1/2 Option Kit ● 1-Slot Riser Cage (full-height slot) ● 1-Slot PCIe 4.0 x16 Riser Card	2
4XH7A61082	ThinkSystem SR650 V2/SR665 E/x16/x16 PCIe G4 Riser 1/2 Option Kit v2 ● 3-Slot Riser Cage (full-height slots) ● 2-Slot PCIe 4.0 (Empty+x16+x16) Riser Card	2
Riser 2 with 7mm drive bay field upgrades		
4XH7A60927	ThinkSystem SR665 Rear 2x7mm SATA RAID Enablement Kit ● 2-bay SATA RAID HS drive enclosure with cables ● Riser Cage for 7mm drive + 2 full-height slots* ● Riser Cage for 7mm drives without slots ● 2x 7mm drive bay fillers	1
4XH7A60928	ThinkSystem SR665 Rear 2x7mm NVMe RAID Enablement Kit ● 2-bay NVMe RAID HS drive enclosure with cables ● Riser Cage for 7mm drive + 2 full-height slots* ● Riser Cage for 7mm drives without slots ● 2x 7mm drive bay fillers	1
Riser 3 field upgrades		
4XH7A09884	ThinkSystem SR665 x8/x8 PCIe Riser3 Kit ● 2-Slot Riser Cage (full-height slots) ● 2-Slot PCIe 4.0 (x8+x8) Riser Card ● Rear wall bracket ● Signal/power cable set (4 cables)	1
4XH7A61083	ThinkSystem SR665 x16/x16 PCIe G4 Riser3 Option Kit v2 ● 2-Slot Riser Cage (full-height slots) ● 2-Slot PCIe 4.0 (x16+x16) Riser Card ● Rear wall bracket ● Signal/power cable set (6 cables)	1

* To add two x16 slots, you will need to also order a riser card using option 4XH7A09878

Network adapters

The server has a dedicated OCP 3.0 SFF slot with PCIe 4.0 x16 host interface. See Figure 3 for the location of the OCP slot.

The following table lists the supported OCP adapters. One port can optionally be shared with the XCC management processor for Wake-on-LAN and NC-SI support. Only 1 OCP card can be installed in the server.

Table 58. Supported OCP adapters

Part number	Feature code	Description	Maximum supported
Gigabit			
4XC7A08235	B5T1	ThinkSystem Broadcom 5719 1GbE RJ45 4-port OCP Ethernet Adapter	1
4XC7A08277	B93E	ThinkSystem Intel I350 1GbE RJ45 4-port OCP Ethernet Adapter	1
Combo Gigabit + 10 GbE			
4XC7A08239	B5SS	ThinkSystem Broadcom 57416 10GBASE-T 2-port + 5720 1GbE 2-port OCP Ethernet Adapter	1
10 GbE			
4XC7A08236	B5ST	ThinkSystem Broadcom 57416 10GBASE-T 2-port OCP Ethernet Adapter	1
4XC7A08240	B5T4	ThinkSystem Broadcom 57454 10GBASE-T 4-port OCP Ethernet Adapter	1
4XC7A08278	BCD5	ThinkSystem Intel X710-T2L 10GBASE-T 2-port OCP Ethernet Adapter	1
4XC7A08310	BB8U	ThinkSystem Marvell QL41132 10GBASE-T 2-port OCP Ethernet Adapter	1
25 GbE			
4XC7A08237	B5SZ	ThinkSystem Broadcom 57414 10/25GbE SFP28 2-port OCP Ethernet Adapter	1
4XC7A08242	B5SV	ThinkSystem Broadcom 57454 10/25GbE SFP28 4-port OCP Ethernet Adapter	1
4XC7A08294	BCD4	ThinkSystem Intel E810-DA2 10/25GbE SFP28 2-Port OCP Ethernet Adapter	1
4XC7A08264	B5SW	ThinkSystem Marvell QL41232 10/25GbE SFP28 2-Port OCP Ethernet Adapter	1
4XC7A08246	B5T2	ThinkSystem Mellanox ConnectX-4 Lx 10/25GbE SFP28 2-port OCP Ethernet Adapter	1
4XC7A62582	BE4T	ThinkSystem Mellanox ConnectX-6 Lx 10/25GbE SFP28 2-Port OCP Ethernet Adapter	1

For more information, including the transceivers and cables that each adapter supports, see the list of Lenovo Press Product Guides in the Networking adapters category:
https://lenovopress.com/servers/options/ethernet

The following table lists additional supported network adapters that can be installed in the regular PCIe slots.

Table 59. Supported PCIe Network Adapters

Part number	Feature code	Description	Maximum supported	Slots supported
Gigabit Ethernet				

Part number	Feature code	Description	Maximum supported	Slots supported
7ZT7A00482	AUZX	ThinkSystem Broadcom 5720 1GbE RJ45 2-Port PCIe Ethernet Adapter	8	All slots
7ZT7A00484	AUZV	ThinkSystem Broadcom 5719 1GbE RJ45 4-Port PCIe Ethernet Adapter	8	All slots
7ZT7A00533	AUZZ	ThinkSystem I350-F1 PCIe 1Gb 1-Port SFP Ethernet Adapter	8	All slots
7ZT7A00534	AUZY	ThinkSystem I350-T2 PCIe 1Gb 2-Port RJ45 Ethernet Adapter	8	All slots
7ZT7A00535	AUZW	ThinkSystem I350-T4 PCIe 1Gb 4-Port RJ45 Ethernet Adapter	8	All slots
10 GbE				
7ZT7A00496	AUKP	ThinkSystem Broadcom 57416 10GBASE-T 2-Port PCIe Ethernet Adapter	8	All slots
4XC7A08245	B5SU	ThinkSystem Broadcom 57454 10GBASE-T 4-port PCIe Ethernet Adapter	8	All slots
00MM860	ATPX	Intel X550-T2 Dual Port 10GBase-T Adapter	8	All slots
7ZT7A00537	AUKX	ThinkSystem Intel X710-DA2 PCIe 10Gb 2-Port SFP+ Ethernet Adapter	8	All slots
4XC7A08225	B31G	ThinkSystem QLogic QL41134 PCIe 10Gb 4-Port Base-T Ethernet Adapter	8	All slots
25 GbE				
4XC7A08238	B5T0	ThinkSystem Broadcom 57414 10/25GbE SFP28 2-port PCIe Ethernet Adapter	8	All slots
4XC7A08316	BD49	ThinkSystem Broadcom 57454 10/25GbE SFP28 4-port PCIe Ethernet Adapter V2	8	All slots
4XC7A08241	B5T3	ThinkSystem Broadcom 57454 10/25GbE SFP28 4-port PCIe Ethernet Adapter	8	All slots
4XC7A08295	BCD6	ThinkSystem Intel E810-DA2 10/25GbE SFP28 2-Port PCIe Ethernet Adapter	8	All slots
4XC7A08270	B652	ThinkSystem Marvell QL41232 10/25GbE SFP28 2-Port PCIe Ethernet Adapter	8	All slots
4XC7A08249	B653	ThinkSystem Mellanox ConnectX-4 Lx 10/25GbE SFP28 2-port PCIe Ethernet Adapter	8	All slots
4XC7A62580	BE4U	ThinkSystem Mellanox ConnectX-6 Lx 10/25GbE SFP28 2-Port PCIe Ethernet Adapter	8	All slots
4XC7A62581	BHE2	ThinkSystem Solarflare X2522-Plus 10/25GbE SFP28 2-Port PCIe Ethernet Adapter	8	All slots
4XC7A08317	BFPU	ThinkSystem Xilinx Alveo U25 25GbE SFP28 2-Port PCIe FPGA Adapter	2	1, 3, 4†
100Gb Ethernet and HDR100 InfiniBand				
4XC7A08297	B96F	ThinkSystem Broadcom 57508 100GbE QSFP56 2-port PCIe 4 Ethernet Adapter	6	Any 6 slots
4XC7A08248	B8PP	ThinkSystem Mellanox ConnectX-6 Dx 100GbE QSFP56 2-port PCIe Ethernet Adapter	6	Any 6 slots
4C57A14177	B4R9	ThinkSystem Mellanox ConnectX-6 HDR100/100GbE QSFP56 1-port PCIe VPI Adapter	6	Any 6 slots
4C57A14178	B4RA	ThinkSystem Mellanox ConnectX-6 HDR100/100GbE QSFP56 2-port PCIe VPI Adapter	6	Any 6 slots

Part number	Feature code	Description	Maximum supported	Slots supported
4XC7A76757	BLC2	ThinkSystem Xilinx Alveo U50 Data Center Accelerator Adapter	2	1, 3, 4†
200Gb Ethernet and HDR InfiniBand				
4C57A15326	B4RC	ThinkSystem Mellanox ConnectX-6 HDR/200GbE QSFP56 1-port PCIe 4 VPI Adapter	3	1,2,3,7
4C57A14179	B4RB	ThinkSystem Mellanox HDR/200GbE 2x PCIe Aux Kit	3	4,5,6,8

* See thermal requirements below
† With the NVIDIA A100 installed, the Xilinx adapters can be installed in slots 3 and 4; without the A100 GPU, the Xilinx adapters can be installed in slots 1 and 4.

Use of the Mellanox HDR PCIe Aux Kit : The HDR Aux Kit (4C57A14179) enables a Socket Direct connection which allows the HDR adapter (4C57A15326) to have direct access to each of the two processors. Such a configuration ensures extremely low latency and CPU utilization in addition to higher network throughput. Socket Direct also maximizes AI and ML application performance, as it enables native GPU-Direct Technologies.

The following thermal requirement apply to HDR and HDR100 adapters:

- The Performance cooling fans must be installed. See the Cooling section for details.

For more information, including the transceivers and cables that each adapter supports, see the list of Lenovo Press Product Guides in the Networking adapters category:
https://lenovopress.com/servers/options/ethernet

Fibre Channel host bus adapters

The following table lists the Fibre Channel HBAs supported by the SR665.

Note that the Emulex LPe35000 adapters are supported either with EPYC 7002 "Rome" processors or with EPYC 7003 "Milan" processors, as indicated in the table.

Table 60. Fibre Channel HBAs

Part number	Feature code	Description	EPYC 7002	EPYC 7003	Max qty	Slots supported
64 Gb Fibre Channel HBAs						
4XC7A77485	BLC1	ThinkSystem Emulex LPe36002 64Gb 2-port PCIe Fibre Channel Adapter	Yes	Yes	8	All slots
32 Gb Fibre Channel HBAs						
4XC7A08250	B5SX	ThinkSystem Emulex LPe35000 32Gb 1-port PCIe Fibre Channel Adapter	Yes	No	8	All slots
4XC7A08251	B5SY	ThinkSystem Emulex LPe35002 32Gb 2-port PCIe Fibre Channel Adapter	Yes	No	8	All slots
4XC7A76498	BJ3G	ThinkSystem Emulex LPe35000 32Gb 1-port PCIe Fibre Channel Adapter V2	Yes	Yes	8	All slots
4XC7A76525	BJ3H	ThinkSystem Emulex LPe35002 32Gb 2-port PCIe Fibre Channel Adapter V2	Yes	Yes	8	All slots
4XC7A08279	BA1G	ThinkSystem QLogic QLE2770 32Gb 1-Port PCIe Fibre Channel Adapter	Yes	Yes	8	All slots
4XC7A08276	BA1F	ThinkSystem QLogic QLE2772 32Gb 2-Port PCIe Fibre Channel Adapter	Yes	Yes	8	All slots
16 Gb Fibre Channel HBAs						
01CV840	ATZV	Emulex 16Gb Gen6 FC Dual-port HBA	Yes	Yes	8	All slots
01CV830	ATZU	Emulex 16Gb Gen6 FC Single-port HBA	Yes	Yes	8	All slots
01CV760	ATZC	QLogic 16Gb Enhanced Gen5 FC Dual-port HBA	Yes	Yes	8	All slots
01CV750	ATZB	QLogic 16Gb Enhanced Gen5 FC Single-port HBA	Yes	Yes	8	All slots

For more information, see the list of Lenovo Press Product Guides in the Host bus adapters category: https://lenovopress.com/servers/options/hba

SAS adapters for external storage

The following table lists SAS HBAs and RAID adapters supported by SR665 server for use with external storage.

Table 61. Adapters for external storage

Part number	Feature code	Description	Maximum supported	Slots supported
SAS HBAs				
7Y37A01090	AUNR	ThinkSystem 430-8e SAS/SATA 12Gb HBA	8	All slots
7Y37A01091	AUNN	ThinkSystem 430-16e SAS/SATA 12Gb HBA	8	All slots
4Y37A09724	B8P7	ThinkSystem 440-16e SAS/SATA PCIe Gen4 12Gb HBA	8	All slots
External RAID adapters				
7Y37A01087	AUNQ	ThinkSystem RAID 930-8e 4GB Flash PCIe 12Gb Adapter	4*	1, 2, 3

* See below regarding supercap requirements

RAID 930-8e adapter: The RAID 930-8e is not supported installed with any X40 internal RAID adapters.

The RAID 930-8e uses a flash power module (supercap), which can be installed in one of up to four locations in the server depending on the server configuration. See the RAID flash power module (supercap) support section for details. The number of 930-8e RAID adapters supported is based on how many supercaps can be installed in the server. If an internal 930i RAID adapter with flash power modules is installed, the maximum number of 930-8e adapters supported is reduced by 1.

For more information, see the list of Lenovo Press Product Guides in the Host bus adapters and RAID adapters categories:

https://lenovopress.com/servers/options/hba
https://lenovopress.com/servers/options/raid

The following table compares the specifications of the external SAS HBAs and RAID adapters.

Table 62. Comparison of external storage adapters

Feature	430-8e	430-16e	440-16e	930-8e
Adapter type	HBA	HBA	HBA	External RAID
Part number	7Y37A01090	7Y37A01091	4Y37A09724	7Y37A01087
Controller chip	LSI SAS3408	LSI SAS3416	Broadcom SAS3816	LSI SAS3516
Broadcom equivalent	HBA 9400-8e	HBA 9400-16e	HBA 9500-16e	MegaRAID 9480-8e
Host interface	PCIe 3.0x8	PCIe 3.0x8	PCIe 4.0 x8	PCIe 3.0x8
Port interface	12 Gb SAS	12 Gb SAS	12 Gb SAS	12 Gb SAS
Number of ports	8	16	16	8
Port connectors	2x Mini-SAS HD SFF8644	4x Mini-SAS HD SFF8644	4x Mini-SAS HD SFF8644	2x Mini-SAS HD SFF8644
Drive interface	SAS/SATA	SAS/SATA	SAS/SATA	SAS,SATA
Drive type	HDD/SSD/SED*	HDD/SSD/SED*	HDD/SSD/SED*	HDD, SED, SSD
Hot-swap drives	Yes	Yes	Yes	Yes
Max devices	1024	1024	1024	216
RAID levels	None	None	None	0, 1, 10, 5, 50, 6, 60
JBOD mode	Yes	Yes	Yes	Yes
Cache	None	None	None	4GB (Standard)
CacheVault cache protection	None	None	None	Yes (Flash)
Performance Accelerator (FastPath)	No	No	No	Yes
SSD Caching (CacheCade Pro 2.0)	No	No	No	No
SED support	Yes*	Yes*	Yes*	Yes (Safestore)

* SAS HBAs support SEDs (self-encrypting drives) by using software on the server and simply passing SED commands through the HBA to the drives. SED support by RAID controllers is provided using the built-in MegaRAID SafeStore functionality of the adapter.

Flash storage adapters

The SR665 supports the PCIe Flash Storage adapters listed in the following table.

Table 63. Flash Storage Adapters

Part number	Feature code	Description	Maximum supported	Slots supported
Mainstream NVMe PCIe Adapters - Optimized for mixed-intensive application workloads with an endurance of 3-5 DWPD.				
4XB7A14075	B8JH	ThinkSystem HHHL PM1735 1.6TB Mainstream NVMe PCIe 4.0 x8 Flash Adapter	8	All slots
4XB7A14076	B8HW	ThinkSystem HHHL PM1735 3.2TB Mainstream NVMe PCIe 4.0 x8 Flash Adapter	8	All slots
4XB7A14077	B96M	ThinkSystem HHHL PM1735 6.4TB Mainstream NVMe PCIe4.0 x8 Flash Adapter	8	All slots

For details about these adapters, see the Lenovo Press product guides in the Flash Adapters category: https://lenovopress.com/servers/options/ssdadapter

Configuration rules

The following configuration requirements must be met when installing flash storage adapters:

- GPU adapters are not supported
- Performance fans are required and will be derived by the configurator for configure-to-order builds.
- When adding Flash adapters as field upgrades, you will be required to replace all standard fans with performance fan modules. See the Cooling section for ordering information.

GPU adapters

The SR665 supports the following graphics processing units (GPUs).

Table 64. Supported GPUs

Part number	Feature code	Description	Aux power	Maximum supported	Slots supported
Double-wide GPUs					
4X67A76715‡	BLK1‡	ThinkSystem NVIDIA A100 80GB PCIe Gen4 Passive GPU	Yes	3	2,5,7*
4X67A13135‡	BEL5‡	ThinkSystem NVIDIA A100 40GB PCIe Gen4 Passive GPU	Yes	3	2,5,7*
4X67A72593	BEL4	ThinkSystem NVIDIA A40 48GB PCIe Gen4 Passive GPU	Yes	3	2,5,7*
4X67A76581	BJHG	ThinkSystem NVIDIA A30 24GB PCIe Gen4 Passive GPU	Yes	3	2,5,7*
4X67A76727	BNFE	ThinkSystem NVIDIA A16 64GB Gen4 PCIe Passive GPU	Yes	3	2,5,7
4X67A65441†	BCGR	ThinkSystem NVIDIA Quadro RTX 8000 48GB PCIe Passive GPU	Yes	3	
4X67A13125†	BB2D	ThinkSystem NVIDIA Quadro RTX 6000 24GB PCIe Passive GPU	Yes	3	2,5,7*
Single-wide GPUs					
4X67A71311	BFTZ	ThinkSystem NVIDIA A10 24GB PCIe Gen4 Passive GPU	Yes	3	1,4,7
4X67A11584	B31D	ThinkSystem NVIDIA Quadro P620 2GB PCIe Active GPU	No	8	1-8
4X67A14926	B4YB	ThinkSystem NVIDIA T4 16GB PCIe Passive GPU	No	8	1-8

‡ For SR665 systems with AMD EPYC 7003 "Milan" processors, the A100 is supported in either factory orders (CTO) or field upgrades. For SR665 systems with AMD EPYC 7002 "Rome" processors, the A100 is only supported under Special Bid conditions and is not supported as a field upgrade. Requires the refreshed system board as listed in the Models section
* When a double-wide GPU is installed in slot 2, 5 or 7, the adjacent slot 1, 4 and 8 respectively is not available
† The RTX 6000 and RTX 8000 GPUs are only available via Special Bid.

For information about these GPUs, see the ThinkSystem GPU Summary, available at:
https://lenovopress.com/lp0768-thinksystem-thinkagile-gpu-summary

Configuration rules

The following configuration requirements must be met when installing GPUs:

- All GPUs installed must be identical
- Flash storage adapters are not supported.
- Only P620 GPUs (40W power) are supported with the following front drive configurations:
  - 24x 2.5-inch front drive bays
  - 12x 3.5-inch front drive bays
- The T4, V100, V100S and A100 GPUs are only supported with the following front drive configurations:
  - 8x 2.5-inch front drive bays
  - 16x 2.5-inch front drive bays
  - 8x 3.5-inch front drive bays
- Middle drive bays and Rear drive bays are not supported

Riser selections for double-wide GPUs

When a double-wide GPU is installed in slot 2, 5 or 7, the adjacent slot 1, 4 and 8 respectively is not available. The riser cards listed in the following table are used with double-wide GPUs.

Table 65. Risers needed for double-wide GPUs

Riser	Part number	Feature code	Description
Riser 1 (GPU in slot 2)	4XH7A61082	B8LR	ThinkSystem SR650 V2/SR665 E/x16/x16 PCIe G4 Riser 1/2 Option Kit v2
Riser 2 (GPU in slot 5)	4XH7A61082	B8LR	ThinkSystem SR650 V2/SR665 E/x16/x16 PCIe G4 Riser 1/2 Option Kit v2
Riser 3 (GPU in slot 7)	4XH7A61083	B8MK	ThinkSystem SR665 x16/x16 PCIe G4 Riser3 Option Kit v2

GPU Thermal Option Kit

When installing an NVIDIA A10 GPU or any double-wide GPU as a field upgrade, you will also need to order the Thermal Option Kit as listed in the following table. This kit is not required for the NVIDIA T4 or P620 GPUs.

- When adding GPUs as field upgrades, you will be required to replace all Standard fans with Performance fans. See the Cooling section for ordering information.
- When installing a double-wide GPU or the NVIDIA A10, you will also need to order the Thermal Option Kit as listed in the following table (not required for NVIDIA T4 or P620 GPUs). The Thermal Option Kit includes the required auxiliary power cable for supported GPUs except for the NVIDIA A10, which requires 4X97A81933.

A10 auxiliary power cable: The ThinkSystem SR665 GPU Thermal Option Kit v2 is required when installing the NVIDIA A10 as a field upgrade, however the kit does not contain the required auxiliary power cable (SBB7A21686). For the NVIDIA A10, you will *also* need to order the ThinkSystem SR650 V2/SR665 NVIDIA SW GPU Cable Kit, 4X97A81933 as described in the GPU cable kits section.

Table 66. GPU Thermal Option Kits

Part number	Description
4M17A80478	ThinkSystem SR665 GPU Thermal Option Kit v2 (for double-wide GPUs) • 2x 1U processor heatsinks • 1x ThinkSystem 2U GPU air duct • 3x GPU extension air ducts • 3x Power cables for double-wide GPU (SBB7A49792) • 3x Air duct fillers
4M17A11759	ThinkSystem SR665 GPU Thermal Option Kit (for double-wide GPUs) • 2x 1U processor heatsinks • 1x ThinkSystem 2U GPU air duct • 3x GPU extension air ducts • 3x Power cables for double-wide GPU (SBB7A21691) • 3x Air duct fillers

GPU cable kits

The following cable kits are offered to provide auxiliary power cables for GPUs that require one. See the Supported GPUs table to see which GPUs require an auxiliary power cable.

Configuration notes:

- These cable kits are only required for field upgrades; CTO orders will automatically include any required cables.
- The DW (double-wide) cable kit is only required if you are adding *additional* double-wide GPUs to a server that already has a DW GPU installed from a CTO order. If you are doing a field upgrade to install the *first* DW GPU to a server, order the GPU Thermal Option Kit instead. The GPU Thermal Option Kit includes the necessary power cables.
- The SW (single-wide) cable kit is required if you are doing any field upgrades to add a single-wide GPU that requires an auxiliary power cable. The GPU Thermal Option Kit is required for the first SW GPU installed, however the kit *does not* include the necessary power cable for a SW GPU.
- The SW cable kit includes three Y-cables, however these are currently not used in the SR665, because the server does not support two single-wide GPUs (power > 75W) in a single riser.

Table 67. GPU cable kits

Part number	Description
4X97A81932	ThinkSystem SR650 V2/SR665 NVIDIA DW GPU Cable Kit • 3x Power cables for double-wide GPU (SBB7A49792)
4X97A81933	ThinkSystem SR650 V2/SR665 NVIDIA SW GPU Cable Kit • 3x Power cables for single-wide GPU (SBB7A21686) • 3x Power Y-cables when 2x single-wide GPUs installed on one riser (SBB7A23757)

Cooling

The SR665 server has up to six 60 mm hot-swap fans. Five fans are needed when one processor is installed and six fans are required when two processors are installed. The server offers N+1 redundancy. The server also has one or two additional fans integrated in each of the two power supplies.

Depending on the configuration, the server will need either Standard fans (single-rotor 17K RPM) or Performance fans (dual-rotor 18K RPM).

Under all of the following conditions, standard fans can be used:

- No GPUs
- No Mellanox ConnectX-6 100 GbE/200 GbE adapter with Active Optical Cables
- No Xilinx Alveo U25 FPGA adapter
- No Broadcom 57454 10GBASE-T 4-port OCP adapter
- No 256 GB 3DS RDIMMs
- No mid-chassis drive bays
- No rear drive bays

If any conditions are not met, Performance fans are required.

Ordering information for the fans is listed in the following table.

Table 68. Fan ordering information

Part number	Feature code	Description	Number required
4F17A14490	B8LX	ThinkSystem SR665 Standard Fan Option Kit	1x CPU: 5 2x CPUs: 6
4F17A14489	B8LY	ThinkSystem SR665 Performance Fan Option Kit	1x CPU: 5 2x CPUs: 6

Power supplies

The SR665 supports up to two redundant hot-swap power supplies.

The power supply choices are listed in the following table. Both power supplies used in server must be identical.

Tip: When configuring a server in the DCSC configurator, power consumption is calculated precisely by interfacing with Lenovo Capacity Planner. You can therefore select the appropriate power supply for your configuration. However, do consider future upgrades that may require additional power needs.

Table 69. Power supply options

Part number	Feature code	Description	Maximum supported	110V AC	220V AC	240V DC China only	-48V DC
AC input power							
4P57A26290	B8Q9	ThinkSystem 500W(230V/115V) V2 Platinum Hot-Swap Power Supply	2	Yes	Yes	Yes	No
4P57A26291	B8QA	ThinkSystem 750W (230/115V) V2 Platinum Hot-Swap Power Supply	2	Yes	Yes	Yes	No
4P57A26292	B8QD	ThinkSystem 750W (230V) V2 Titanium Hot-Swap Power Supply	2	No	Yes	Yes	No
4P57A26293	B8QC	ThinkSystem 1100W (230V/115V) V2 Platinum Hot-Swap Power Supply	2	Yes	Yes	Yes	No
4P57A78362	BMUF	ThinkSystem V2 1800W (230V) Platinum Hot-Swap Power Supply v2	2	No	Yes	Yes	No
4P57A26294	B8QB	ThinkSystem V2 1800W (230V) Platinum Hot-Swap Power Supply	2	No	Yes	Yes	No
-48V DC input power							
4P57A26296	B8QE	ThinkSystem 1100W -48V DC v2 Power Supply	2	No	No	No	Yes

Dual-voltage power supplies are auto-sensing and support both 110V AC (100-127V 50/60 Hz) and 220V AC (200-240V 50/60 Hz) power. For China customers, all power supplies support 240V DC.

All supported AC power supplies have a C14 connector. The -48V DC power supply has a Weidmuller TOP 4GS/3 7.6 terminal as shown in the following figure.



Figure 17. ThinkSystem 1100W -48V DC v2 Power Supply

Power supply options do not include a line cord. For server configurations, the inclusion of a power cord is model dependent. Configure-to-order models can be configured without power cords if desired.

Power cords

Line cords and rack power cables with C13 connectors can be ordered as listed in the following table.

110V customers: If you plan to use the ThinkSystem 1100W power supply with a 110V power source, select a power cable that is rated above 10A. Power cables that are rated at 10A or below are not supported with 110V power.

Table 70. Power cords

Part number	Feature code	Description
Rack cables		
00Y3043	A4VP	1.0m, 10A/100-250V, C13 to C14 Jumper Cord
39Y7937	6201	1.5m, 10A/100-250V, C13 to C14 Jumper Cord
4L67A08369	6570	2.0m, 13A/100-250V, C13 to C14 Jumper Cord
4L67A08366	6311	2.8m, 10A/100-250V, C13 to C14 Jumper Cord
4L67A08370	6400	2.8m, 13A/100-250V, C13 to C14 Jumper Cord
39Y7932	6263	4.3m, 10A/100-250V, C13 to C14 Jumper Cord
4L67A08371	6583	4.3m, 13A/100-250V, C13 to C14 Jumper Cord
Line cords		
39Y7930	6222	2.8m, 10A/250V, C13 to IRAM 2073 (Argentina) Line Cord
81Y2384	6492	4.3m, 10A/250V, C13 to IRAM 2073 (Argentina) Line Cord
39Y7924	6211	2.8m, 10A/250V, C13 to AS/NZS 3112 (Australia/NZ) Line Cord
81Y2383	6574	4.3m, 10A/250V, C13 to AS/NZS 3112 (Australia/NZ) Line Cord
69Y1988	6532	2.8m, 10A/250V, C13 to NBR 14136 (Brazil) Line Cord
81Y2387	6404	4.3m, 10A/250V, C13 to NBR 14136 (Brazil) Line Cord
39Y7928	6210	2.8m, 10A/220V, C13 to GB 2099.1 (China) Line Cord
81Y2378	6580	4.3m, 10A/250V, C13 to GB 2099.1 (China) Line Cord
39Y7918	6213	2.8m, 10A/250V, C13 to DK2-5a (Denmark) Line Cord
81Y2382	6575	4.3m, 10A/250V, C13 to DK2-5a (Denmark) Line Cord
39Y7917	6212	2.8m, 10A/250V, C13 to CEE 7/7 (Europe) Line Cord
81Y2376	6572	4.3m, 10A/250V, C13 to CEE 7/7 (Europe) Line Cord
39Y7927	6269	2.8m, 10A/250V, C13 to IS 6538 (India) Line Cord
81Y2386	6567	4.3m, 10A/250V, C13 to IS 6538 (India) Line Cord
39Y7920	6218	2.8m, 10A/250V, C13 to SI 32 (Israel) Line Cord
81Y2381	6579	4.3m, 10A/250V, C13 to SI 32 (Israel) Line Cord
39Y7921	6217	2.8m, 10A/250V, C13 to CEI 23-16 (Italy) Line Cord
81Y2380	6493	4.3m, 10A/250V, C13 to CEI 23-16 (Italy) Line Cord
4L67A08362	6495	4.3m, 12A/200V, C13 to JIS C-8303 (Japan) Line Cord
39Y7922	6214	2.8m, 10A/250V, C13 to SABS 164-1 (South Africa) Line Cord
81Y2379	6576	4.3m, 10A/250V, C13 to SANS 164-1 (South Africa) Line Cord
39Y7926	6335	4.3m, 12A/100V, C13 to JIS C-8303 (Japan) Line Cord

Part number	Feature code	Description
39Y7925	6219	2.8m, 12A/220V, C13 to KSC 8305 (S. Korea) Line Cord
81Y2385	6494	4.3m, 12A/250V, C13 to KSC 8305 (S. Korea) Line Cord
39Y7919	6216	2.8m, 10A/250V, C13 to SEV 1011-S24507 (Swiss) Line Cord
81Y2390	6578	4.3m, 10A/250V, C13 to SEV 1011-S24507 (Swiss) Line Cord
23R7158	6386	2.8m, 10A/125V, C13 to CNS 10917 (Taiwan) Line Cord
81Y2375	6317	2.8m, 10A/250V, C13 to CNS 10917 (Taiwan) Line Cord
81Y2374	6402	2.8m, 13A/125V, C13 to CNS 10917 (Taiwan) Line Cord
4L67A08363	AX8B	4.3m, 10A/125V, C13 to CNS 10917 (Taiwan) Line Cord
81Y2389	6531	4.3m, 10A/250V, C13 to CNS 10917 (Taiwan) Line Cord
81Y2388	6530	4.3m, 13A/125V, C13 to CNS 10917 (Taiwan) Line Cord
39Y7923	6215	2.8m, 10A/250V, C13 to BS 1363/A (UK) Line Cord
81Y2377	6577	4.3m, 10A/250V, C13 to BS 1363/A (UK) Line Cord
90Y3016	6313	2.8M, 10A/125V, C13 to NEMA 5-15P (US) Line Cord
46M2592	A1RF	2.8m, 10A/250V, C13 to NEMA 6-15P (US) Line Cord
00WH545	6401	2.8M, 13A/125V, C13 to NEMA 5-15P (US) Line Cord
4L67A08359	6370	4.3m, 10A/125V, C13 to NEMA 5-15P (US) Line Cord
4L67A08361	6373	4.3m, 10A/250V, C13 to NEMA 6-15P (US) Line Cord
4L67A08360	AX8A	4.3m, 13A/125V, C13 to NEMA 5-15P (US) Line Cord

For the -48V DC Power Supply, the following power cable is supported.

Table 71. -48V DC power cable

Part number	Feature code	Description
4X97A59831	BE4V	2.5m, -48VDC Interconnecting Cable

Systems management

The server contains an integrated service processor, XClarity Controller (XCC), which provides advanced control, monitoring, and alerting functions. The XCC is based on the Pilot4 XE401 baseboard management controller (BMC) using a dual-core ARM Cortex A9 service processor.

Topics in this section:

- Local management
- System status with XClarity Mobile
- Remote management
- Lenovo XClarity Provisioning Manager
- Lenovo XClarity Administrator
- Lenovo XClarity Essentials
- Lenovo XClarity Energy Manager
- Lenovo Capacity Planner

Local management

The SR665 offers a front operator panel with key LED status indicators, as shown in the following figure.

Tip: The Network LED only shows network activity of the installed OCP network adapter.

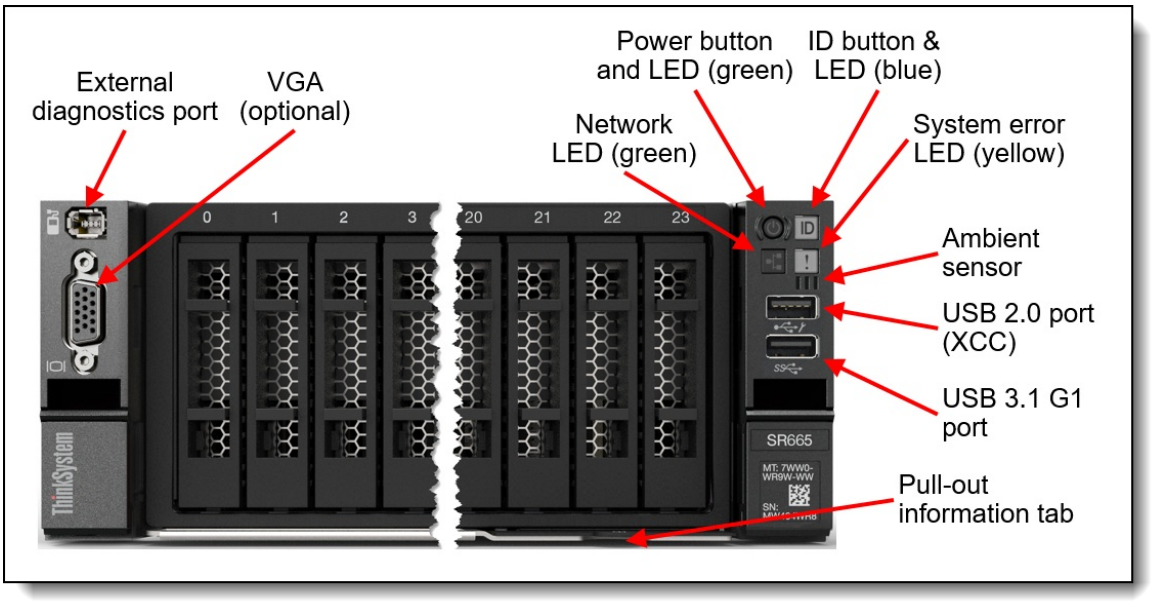

Figure 18. Front operator controls are on the left and right side of the server

Light path diagnostics

The server offers light path diagnostics. If an environmental condition exceeds a threshold or if a system component fails, XCC lights LEDs inside the server to help you diagnose the problem and find the failing part. The server has fault LEDs next to the following components:

- Each processor
- Each memory DIMM
- Each drive bay
- Each system fan
- Each power supply

Integrated Diagnostics Panel for 8x 2.5-inch and 16x 2.5-inch drive bay configurations

For configurations with 8x 2.5-inch or 16x 2.5-inch drive bays at the front, the server can optionally be configured to have a pull-out Integrated Diagnostics Panel. The following figure shows the standard (fixed) operator panel and the optional Integrated Diagnostics Panel.

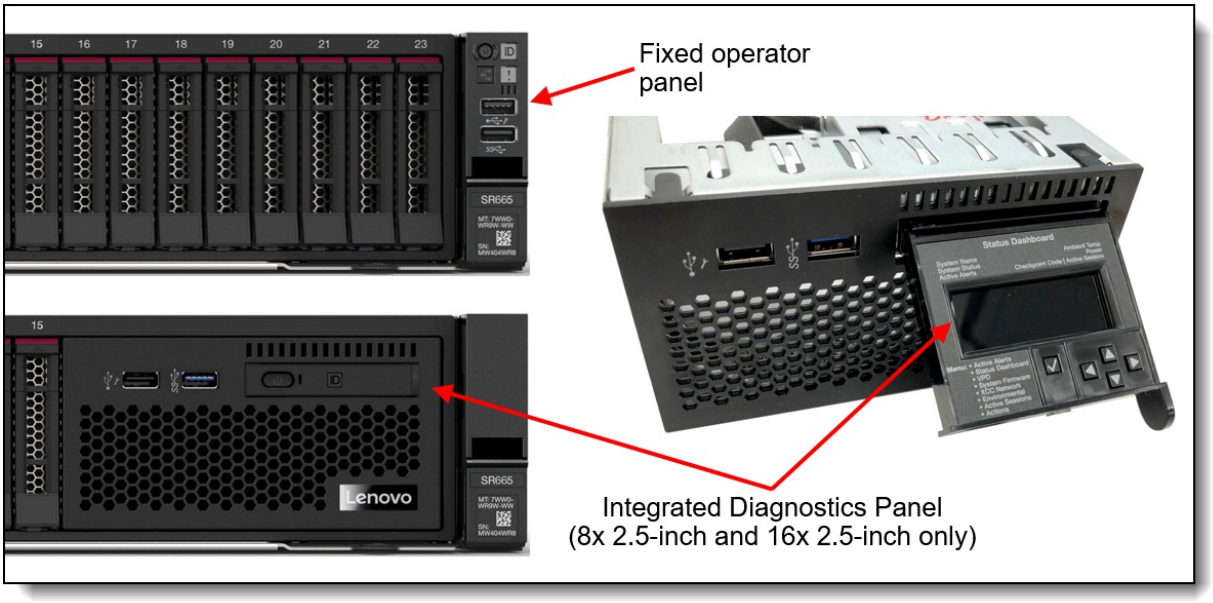

Figure 19. Operator panel choices for the 8x 2.5-inch drive bay configuration

The Integrated Diagnostics Panel allows quick access to system status, firmware, network, and health information. The LCD display on the panel and the function buttons give you access to the following information:

- Active alerts
- Status Dashboard
- System VPD: machine type & mode, serial number, UUID string
- System firmware levels: UEFI and XCC firmware
- XCC network information: hostname, MAC address, IP address, DNS addresses
- Environmental data: Ambient temperature, CPU temperature, AC input voltage, estimated power consumption
- Active XCC sessions
- System reset action

The Integrated Diagnostics Panel can be configured as listed in the following table. It is only available configure-to-order (CTO); not available as a field upgrade.

Table 72. Ordering information for the Integrated Diagnostics Panel

Part number	Feature code	Description
CTO only	B8MS	ThinkSystem 2U 16x2.5" Front Operator Panel

External Diagnostics Handset

The SR665 also has a port to connect an External Diagnostics Handset as shown in the following figure. The External Diagnostics Handset has the same functions as the Integrated Diagnostics Panel but has the advantages of not consuming space on the front of the server plus it can be shared amongst many servers in your data center. The handset has a magnet on the back of it to allow you to easily mount it on a convenient place on any rack cabinet.

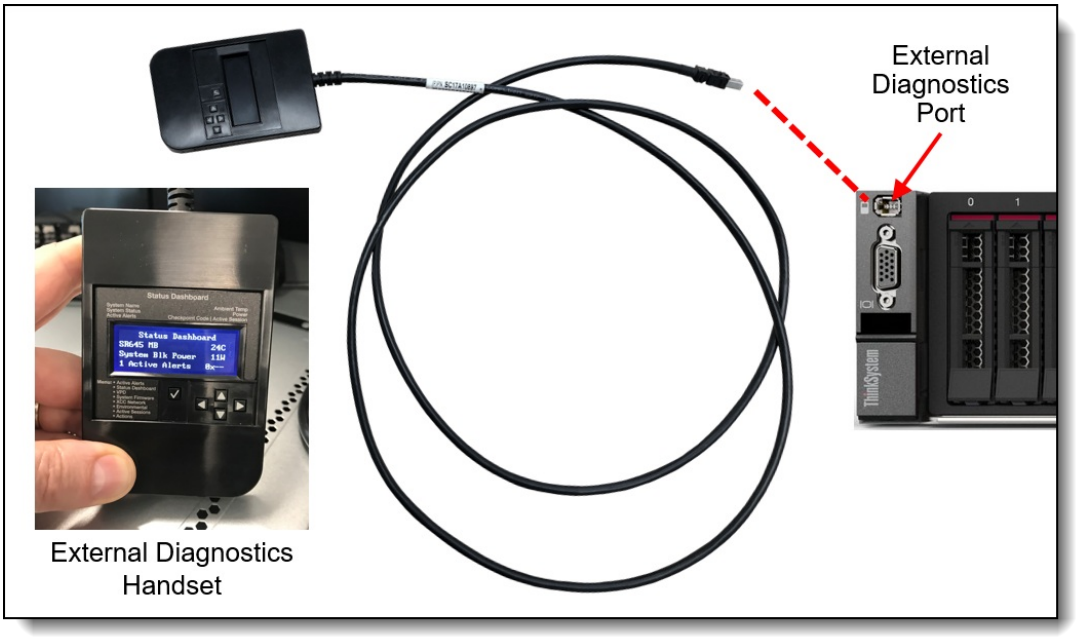

Figure 20. External Diagnostics Handset

Ordering information for the External Diagnostics Handset with is listed in the following table.

Table 73. External Diagnostics Handset ordering information

Part number	Feature code	Description
4TA7A64874	BEUX	External Diagnostics Handset

The front of the server also houses an information pull-out tab (also known as the network access tag). See Figure 2 for the location. A label on the tab shows the network information (MAC address and other data) to remotely access the service processor.

System status with XClarity Mobile

The XClarity Mobile app includes a tethering function where you can connect your Android or iOS device to the server via USB to see the status of the server.

The steps to connect the mobile device are as follows:

1. Enable USB Management on the server, by holding down the ID button for 3 seconds (or pressing the dedicated USB management button if one is present)
2. Connect the mobile device via a USB cable to the server's USB port with the management symbol 
3. In iOS or Android settings, enable Personal Hotspot or USB Tethering
4. Launch the Lenovo XClarity Mobile app

Once connected you can see the following information:

- Server status including error logs (read only, no login required)
- Server management functions (XClarity login credentials required)

Remote management

The server offers a dedicated RJ45 port at the rear of the server for remote management via the XClarity Controller management processor. The port supports 10/100/1000 Mbps speeds.

Remote server management is provided through industry-standard interfaces:

- Intelligent Platform Management Interface (IPMI) Version 2.0
- Simple Network Management Protocol (SNMP) Version 3 (no SET commands; no SNMP v1)
- Common Information Model (CIM-XML)
- Representational State Transfer (REST) support
- Redfish support (DMTF compliant)
- Web browser - HTML 5-based browser interface (Java and ActiveX not required) using a responsive design (content optimized for device being used - laptop, tablet, phone) with NLS support

IPMI via the Ethernet port (IPMI over LAN) is supported, however it is disabled by default. For CTO orders you can specify whether you want to the feature enabled or disabled in the factory, using the feature codes listed in the following table.

Table 74. IPMI-over-LAN settings

Feature code	Description
B7XZ	Disable IPMI-over-LAN (default)
B7Y0	Enable IPMI-over-LAN

There are two XClarity Controller upgrades available for the server, Advanced and Enterprise.

XCC Advanced Upgrade adds the following functions:

- Remotely viewing video with graphics resolutions up to 1600x1200 at 75 Hz with up to 23 bits per pixel, regardless of the system state
- Remotely accessing the server using the keyboard and mouse from a remote client
- International keyboard mapping support
- Syslog alerting
- Redirecting serial console via SSH
- Component replacement log (Maintenance History log)
- Access restriction (IP address blocking)
- Lenovo SED security key management
- Displaying graphics for real-time and historical power usage data and temperature

XCC Enterprise Upgrade enables the following additional features:

- Boot video capture and crash video capture
- Virtual console collaboration - Ability for up to 6 remote users to be log into the remote session simultaneously
- Remote console Java client
- Mapping the ISO and image files located on the local client as virtual drives for use by the server
- Mounting the remote ISO and image files via HTTPS, SFTP, CIFS, and NFS
- Power capping
- System utilization data and graphic view
- Single sign on with Lenovo XClarity Administrator
- Update firmware from a repository
- License for XClarity Energy Manager

For configure-to-order (CTO), you can enable the required XCC functionality by selecting the appropriate XCC feature codes listed in the following table:

- XCC Standard - select neither feature listed in the table
- XCC Advanced - select feature AVUT
- XCC Enterprise - select feature AUPW

Table 75. XClarity Controller upgrades for configure-to-order

Feature code	Description
AVUT	ThinkSystem XClarity Controller Standard to Advanced Upgrade
AUPW	ThinkSystem XClarity Controller Standard to Enterprise Upgrade

For systems with XCC Standard or XCC Advanced installed, field upgrades are available as listed in the following table.

Table 76. XClarity Controller field upgrades

Part number	Description
4L47A09132	ThinkSystem XClarity Controller Standard to Advanced Upgrade (for servers that have XCC Standard)
4L47A09133	ThinkSystem XClarity Controller Advanced to Enterprise Upgrade (for servers that have XCC Advanced)

Lenovo XClarity Provisioning Manager

Lenovo XClarity Provisioning Manager (LXPM) is a UEFI-based application embedded in ThinkSystem servers and accessible via the F1 key during system boot.

LXPM provides the following functions:

- Graphical UEFI Setup
- System inventory information and VPD update
- System firmware updates (UEFI and XCC)
- RAID setup wizard
- OS installation wizard (including unattended OS installation)
- Diagnostics functions

Lenovo XClarity Administrator

Lenovo XClarity Administrator is a centralized resource management solution designed to reduce complexity, speed response, and enhance the availability of Lenovo systems and solutions.

Lenovo XClarity Administrator provides agent-free hardware management for ThinkSystem servers, in addition to ThinkServer, System x, and Flex System servers. The administration dashboard is based on HTML 5 and allows fast location of resources so tasks can be run quickly.

Because Lenovo XClarity Administrator does not require any agent software to be installed on the managed endpoints, there are no CPU cycles spent on agent execution, and no memory is used, which means that up to 1GB of RAM and 1 - 2% CPU usage is saved, compared to a typical managed system where an agent is required.

Lenovo XClarity Administrator provides full management function to ThinkSystem servers, including the following:

- Discovery
- Inventory
- Monitoring and alerting
- Call home
- Centralized user management
- Cryptography modes, server certificates, and encapsulation
- Configuration patterns
- Operating system deployment
- Firmware updates

For more information about Lenovo XClarity Administrator, including ordering part numbers, see the Lenovo XClarity Administrator Product Guide: https://lenovopress.com/tips1200-lenovo-xclarity-administrator

Lenovo XClarity Integrators

Lenovo also offers software plug-in modules, Lenovo XClarity Integrators, to manage physical infrastructure from leading external virtualization management software tools including those from Microsoft and VMware.

These integrators are offered at no charge, however if software support is required, a Lenovo XClarity Pro software subscription license should be ordered.

Lenovo XClarity Integrators offer the following additional features:

- Ability to discover, manage, and monitor Lenovo server hardware from VMware vCenter or Microsoft System Center
- Deployment of firmware updates and configuration patterns to Lenovo x86 rack servers and Flex System from the virtualization management tool
- Non-disruptive server maintenance in clustered environments that reduces workload downtime by dynamically migrating workloads from affected hosts during rolling server updates or reboots
- Greater service level uptime and assurance in clustered environments during unplanned hardware events by dynamically triggering workload migration from impacted hosts when impending hardware failures are predicted

For more information about all the available Lenovo XClarity Integrators, see the Lenovo XClarity Administrator Product Guide: https://lenovopress.com/tips1200-lenovo-xclarity-administrator

Lenovo XClarity Essentials

Lenovo offers the following XClarity Essentials software tools that can help you set up, use, and maintain the server at no additional cost:

- Lenovo Essentials OneCLI

  OneCLI is a collection of server management tools that uses a command line interface program to manage firmware, hardware, and operating systems. It provides functions to collect full system health information (including health status), configure system settings, and update system firmware and drivers.

- Lenovo Essentials UpdateXpress

  The UpdateXpress tool is a standalone GUI application for firmware and device driver updates that enables you to maintain your server firmware and device drivers up-to-date and help you avoid unnecessary server outages. The tool acquires and deploys individual updates and UpdateXpress System Packs (UXSPs) which are integration-tested bundles.

- Lenovo Essentials Bootable Media Creator

  The Bootable Media Creator (BOMC) tool is used to create bootable media for offline firmware update.

For more information and downloads, visit the Lenovo XClarity Essentials web page:
http://support.lenovo.com/us/en/documents/LNVO-center

Lenovo XClarity Energy Manager

Lenovo XClarity Energy Manager is a power and temperature management solution for data centers. It is an agent-free, web-based console that enables you to monitor and manage power consumption and temperature in your data center through the management console.

Lenovo XClarity Energy Manager is a licensed product. A single-node XClarity Energy Manager license is included with the XClarity Controller Enterprise (XCC Enterprise) upgrade as described in the Remote Management section. If your server does not have the XCC Enterprise upgrade, Energy Manager licenses can be ordered as shown in the following table.

Table 77. Lenovo XClarity Energy Manager

Description	Part number
4L40E51621	Lenovo XClarity Energy Manager Node License (1 license needed per server)

Note: The SR665 does not support the following Energy Manager functions:

- Power capping
- Policy-based management

For more information about XClarity Energy Manager, see the following resources:

- Lenovo Support page:
  https://datacentersupport.lenovo.com/us/en/solutions/lnvo-lxem
- Lenovo Information Center:
  https://sysmgt.lenovofiles.com/help/topic/LXEM/lxem_overview.html?cp=4

Lenovo Capacity Planner

Lenovo Capacity Planner is a power consumption evaluation tool that enhances data center planning by enabling IT administrators and pre-sales professionals to understand various power characteristics of racks, servers, and other devices. Capacity Planner can dynamically calculate the power consumption, current, British Thermal Unit (BTU), and volt-ampere (VA) rating at the rack level, improving the planning efficiency for large scale deployments.

For more information, refer to the Capacity Planner web page:
http://datacentersupport.lenovo.com/us/en/solutions/lnvo-lcp

Security

The SR665 server offers the following electronic security features:

- Secure Boot function of the AMD EPYC processor
- Firmware signature processes compliant with FIPS and NIST requirements
- Administrator and power-on password
- Integrated Trusted Platform Module (TPM) supporting TPM 2.0. Servers with EPYC 7002 processors also support TPM 1.2.
- Optional Nationz TPM 2.0, available only in China (CTO only)
- Self-encrypting drives (SEDs) with support for enterprise key managers - see the SED encryption key management section

The server is NIST SP 800-147B compliant.

The SR665 server also offers the following physical security features:

- Chassis intrusion switch
- Optional lockable front security bezel

The optional lockable front security bezel is shown in the following figure and includes a key that enables you to secure the bezel over the drives and system controls thereby reducing the chance of unauthorized or accidental access to the server.

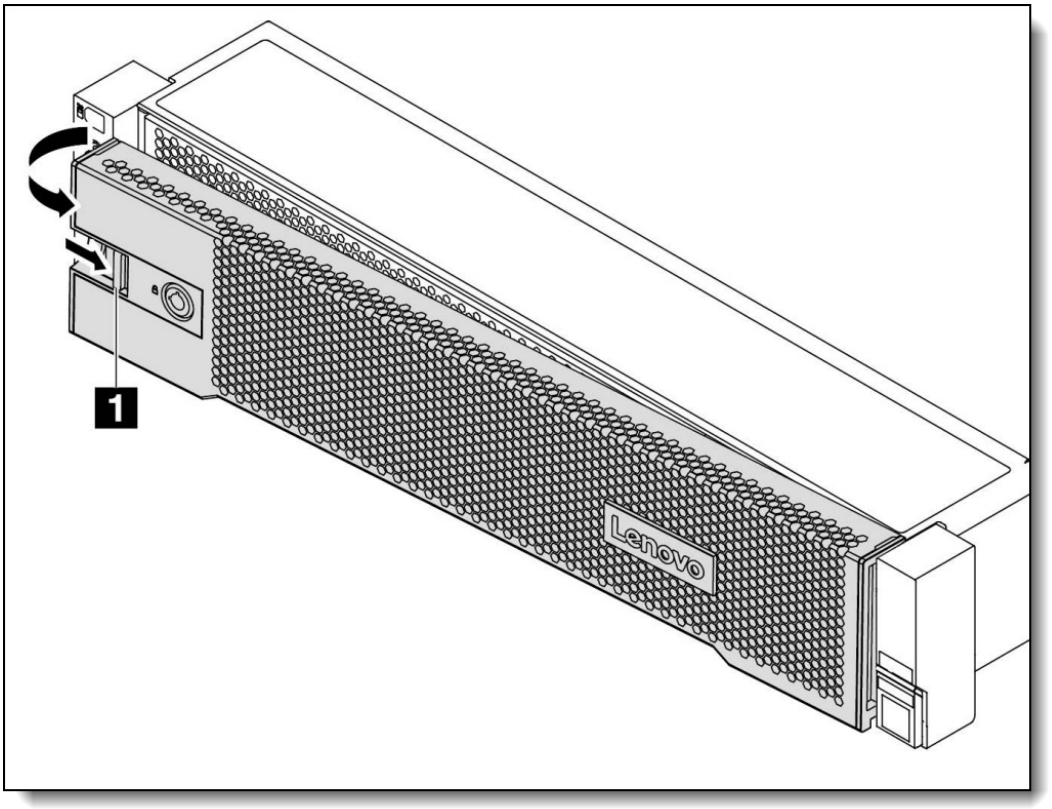

Figure 21. Lockable front security bezel

The dimensions of the security bezel are:

- Width: 437 mm (17.2 in.)
- Height: 87 mm (3.4 in.)
- Width: 23 mm (0.9 in.)

The following table lists the security options for the SR665.

Table 78. Security features

Part number	Feature code	Description
CTO only*	B8LE	ThinkSystem Nationz Trusted Platform Module v2.0 (China customers only)
4XH7A09886	BAUD	ThinkSystem SR650 V2/SR665 Security Bezel v2

* Not available as a field upgrade. The component is CTO or on pre-configured models only.

Lenovo ThinkShield - Platform Firmware Resiliency

Lenovo's ThinkShield Security is a transparent and comprehensive approach to security that extends to all dimensions of our data center products: from development, to supply chain, and through the entire product lifecycle.

The ThinkSystem SR665 offers Platform Firmware Resiliency (PFR) hardware Root of Trust (RoT) which is NIST SP800-193 compliant. This offering further enhances key platform subsystem protections against unauthorized firmware updates and corruption, to restore firmware to an integral state, and to closely monitor firmware for possible compromise from cyber attacks.

PFR operates upon the following server components:

- UEFI image – the low level server firmware that connects the operating system to the server

hardware
- XCC image – the management “engine” software that controls and reports on the server status separate from the server operating system
- FPGA image – the code that runs the server’s lowest level hardware controller on the motherboard

The Lenovo Platform Root of Trust Hardware performs the following three main functions:

- Detection – Measures the firmware and updates for authenticity
- Recovery – Recovers a corrupted image to a known-safe image
- Protection – Monitors the system to ensure the known-good firmware is not maliciously written

These enhanced protection capabilities are implemented using a dedicated, discrete security processor whose implementation has been rigorously validated by leading third-party security firms. Security evaluation results and design details are available for customer review – providing unprecedented transparency and assurance.

Security standards

The SR665 supports the following security standards and capabilities:

- **Industry Standard Security Capabilities**
    - AMD CPU Enablement
        - AES-NI (Advanced Encryption Standard New Instructions)
        - GMET (Guest Mode Execute Trap)
        - Hardware-based side channel attack resilience enhancements
        - NX (No eXecute)
        - PSB (Platform Secure Boot)
        - Shadow Stack
        - SEV (Secure Encrypted Virtualization)
        - SEV-ES (Encrypted State register encryption)
        - SEV-SNP (Secure Nested Paging)
        - SVM (Secure Virtual Machine)
        - SME (Secure Memory Encryption)
        - UMIP (User Mode Instruction Prevention)
    - Microsoft Windows Security Enablement
        - Credential Guard
        - Device Guard
        - Host Guardian Service
    - TCG (Trusted Computing Group) TPM (Trusted Platform Module) 2.0
    - UEFI (Unified Extensible Firmware Interface) Forum Secure Boot
- **Hardware Root of Trust and Security**
    - Independent security subsystem providing platform-wide NIST SP800-193 compliant Platform Firmware Resilience (PFR)
    - Host domain RoT supplemented by AMD Platform Secure Boot (PSB)
    - Management domain RoT supplemented by System x-derived Immutable Boot Block
- **Platform Security**
    - Boot and run-time firmware integrity monitoring with rollback to known-good firmware (e.g., “self-healing”)
    - Non-volatile storage bus security monitoring and filtering
    - Resilient firmware implementation, such as to detect and defeat unauthorized flash writes or SMM (System Management Mode) memory incursions
    - Patent-pending IPMI KCS channel privileged access authorization
    - Host and management domain authorization, including integration with CyberArk for

enterprise password management

- KMIP (Key Management Interoperability Protocol) compliant, including support for IBM SKLM and Thales KeySecure
- Reduced “out of box” attack surface
- Configurable network services

For more information on platform secuirity, see the paper “How to Harden the Security of your ThinkSystem Server and Management Applications” available from https://lenovopress.com/lp1260-how-to-harden-the-security-of-your-thinksystem-server.

- **Standards Compliance and/or Support**
  - NIST SP800-131A rev 2 “Transitioning the Use of Cryptographic Algorithms and Key Lengths”
  - NIST SP800-147B “BIOS Protection Guidelines for Servers”
  - NIST SP800-193 “Platform Firmware Resiliency Guidelines”
  - ISO/IEC 11889 “Trusted Platform Module Library”
  - Common Criteria TCG Protection Profile for “PC Client Specific TPM 2.0”
  - European Union Commission Regulation 2019/424 (“ErP Lot 9”) “Ecodesign Requirements for Servers and Data Storage Products” Secure Data Deletion
  - Optional FIPS 140-2 validated Self-Encrypting Disks (SEDs) with external KMIP-based key management
- **Product and Supply Chain Security**
  - Suppliers validated through Lenovo’s Trusted Supplier Program
  - Developed in accordance with Lenovo’s Secure Development Lifecycle (LSDL)
  - Continuous firmware security validation through automated testing, including static code analysis, dynamic network and web vulnerability testing, software composition analysis, and subsystem-specific testing, such as UEFI security configuration validation
  - Ongoing security reviews by US-based security experts, with attestation letters available from our third-party security partners
  - Digitally signed firmware, stored and built on US-based infrastructure and signed on US-based Hardware Security Modules (HSMs)
  - TAA (Trade Agreements Act) compliant manufacturing, by default in Mexico for North American markets with additional US and EU manufacturing options
  - US 2019 NDAA (National Defense Authorization Act) Section 889 compliant

Rack installation

The following table lists the rack installation options that are available for the SR665.

The VGA Upgrade Kit allows you to upgrade your server by adding a VGA video port to the front of the server (if the server does not already come with a front VGA port). When the front VGA is in use, the rear VGA port is automatically disabled.

Table 79. Rack installation options

Option	Feature Code	Description
Optional front VGA port		
4X97A83222	BMJ9	ThinkSystem 2U EIA Latch w/ VGA and External Diagnostics Port Upgrade Kit v2
4X97A12645	B8ME	ThinkSystem 2U EIA Latch w/ VGA and External Diagnostics Port Upgrade Kit (adds a VGA port to the front of the server)
Rail Kits		
4M17A13564	BK7W	ThinkSystem Toolless Friction Rail v2
4M17A11754	B8LA	ThinkSystem Toolless Slide Rail Kit v2
4M17A11756	B91Y	ThinkSystem Toolless Slide Rail Kit v2 with 2U CMA
Enhanced Rail Kits for > 34 kg server weight*		
4M17A11755	B8LB	ThinkSystem Toolless Slide Rail Kit v2 Enhanced
4M17A11757	B97N	ThinkSystem Toolless Slide Rail Kit v2 Enhanced with 2U CMA
Separate Cable Management Arm		
7M27A05698	B135	ThinkSystem 2U CMA Upgrade Kit for Toolless Slide Rail

* The Enhanced Slide Rail Kits are used when the server is shipped in a rack and the server is 34 kg or heavier (configuration with 20x 3.5-inch HDDs for example)

The following table summarizes the rail kit features and specifications.

Table 80. Rail kit features and specifications summary

Option name	ThinkSystem Toolless Friction Rail v2	ThinkSystem Toolless Slide Rail Kit v2	ThinkSystem Toolless Slide Rail Kit v2 Enhanced	ThinkSystem Toolless Slide Rail Kit v2 with 2U CMA	ThinkSystem Toolless Slide Rail Kit v2 Enhanced with 2U CMA
Option part number	4M17A13564	4M17A11754	4M17A11755	4M17A11756	4M17A11757
Rail type	Half-out slide rail (friction)	Full-out slide rail (ball bearing)	Full-out slide rail (ball bearing)	Full-out slide rail (ball bearing)	Full-out slide rail (ball bearing)
Toolless installation	Yes	Yes	Yes	Yes	Yes
CMA support	No	Optional, 7M27A05698*	Optional, 7M27A05698*	Included	Included
Supported rack type	Four-post IBM and Lenovo standard rack, complying with the IEC standard	Four-post IBM and Lenovo standard rack, complying with the IEC standard	Four-post IBM and Lenovo standard rack, complying with the IEC standard	Four-post IBM and Lenovo standard rack, complying with the IEC standard	Four-post IBM and Lenovo standard rack, complying with the IEC standard
In-rack server maintenance	No	Yes	Yes	Yes	Yes
1U PDU support	Yes	Yes	Yes	Yes	Yes
0U PDU support	Yes	Limited support**	Limited support**	Limited support**	Limited support**
Supported mounting holes	Square or round	Square or round	Square, round, or threaded	Square or round	Square, round, or threaded
Thickness of mounting flanges	2.0-3.3 mm (0.08-0.13 inches)	2.0-3.3 mm (0.08-0.13 inches)	2.0-3.3 mm (0.08-0.13 inches)	2.0-3.3 mm (0.08-0.13 inches)	2.0-3.3 mm (0.08-0.13 inches)
Supported distance between front and rear mounting flanges‡	610-864 mm (24-34 inches)	610-813 mm (24-32 inches)	635-813 mm (25-32 inches)	610-813 mm (24-32 inches)	635-813 mm (25-32 inches)
Rail length†	751 mm (29.6 inches)	740 mm (29.1 inches)	740 mm (29.1 inches)	820 mm (32.3 inches)	820 mm (32.3 inches)

* CMA mounting brackets are not preinstalled on the rail. The CMA mounting brackets are contained in the CMA option kit package and you will need to install the CMA mounting brackets first. For detailed instructions, refer to the documentation that comes with the CMA option kit.
** If you want to install the rails and a 0U PDU into the same rack, the rack must meet the height and depth requirements as described in ThinkSystem Rail Support Matrix.
‡ For best performance, it is recommended that you install the rails to the racks with a 719-mm distance (28.31-inch, Lenovo rack default distance) between the front and rear mounting flanges.
† Measured when mounted on the rack, from the front surface of the front mounting flange to the rear most point of the rail. Rail is in closed position.

Operating system support

The SR665 with EPYC 7003 processors supports the following operating systems:

- Microsoft Windows Server 2016
- Microsoft Windows Server 2019
- Microsoft Windows Server 2022
- Red Hat Enterprise Linux 8.3
- Red Hat Enterprise Linux 8.4
- Red Hat Enterprise Linux 8.5
- SUSE Linux Enterprise Server 12 SP5
- SUSE Linux Enterprise Server 12 Xen SP5
- SUSE Linux Enterprise Server 15 SP2
- SUSE Linux Enterprise Server 15 SP3
- SUSE Linux Enterprise Server 15 Xen SP2
- SUSE Linux Enterprise Server 15 Xen SP3
- VMware ESXi 6.7 U3
- VMware ESXi 7.0 U1
- VMware ESXi 7.0 U2
- VMware ESXi 7.0 U3

The SR665 with EPYC 7002 processors supports the following operating systems:

- Microsoft Windows Server 2016
- Microsoft Windows Server 2019
- Microsoft Windows Server 2022
- Red Hat Enterprise Linux 7.6
- Red Hat Enterprise Linux 7.7
- Red Hat Enterprise Linux 7.8
- Red Hat Enterprise Linux 7.9
- Red Hat Enterprise Linux 8.1
- Red Hat Enterprise Linux 8.2
- Red Hat Enterprise Linux 8.3
- Red Hat Enterprise Linux 8.4
- Red Hat Enterprise Linux 8.5
- SUSE Linux Enterprise Server 12 SP5
- SUSE Linux Enterprise Server 12 Xen SP5
- SUSE Linux Enterprise Server 15 SP1
- SUSE Linux Enterprise Server 15 SP2
- SUSE Linux Enterprise Server 15 SP3
- SUSE Linux Enterprise Server 15 Xen SP1
- SUSE Linux Enterprise Server 15 Xen SP2
- SUSE Linux Enterprise Server 15 Xen SP3
- VMware ESXi 6.7 U3
- VMware ESXi 7.0
- VMware ESXi 7.0 U1
- VMware ESXi 7.0 U2
- VMware ESXi 7.0 U3

For a complete list of supported, certified and tested operating systems, plus additional details and links to relevant web sites, see the Operating System Interoperability Guide:

- SR665 with EPYC 7003: https://lenovopress.com/osig#servers=sr665-7d2w-7d2v-epyc-7003
- SR665 with EPYC 7002: https://lenovopress.com/osig#servers=sr665-7d2w-7d2v-epyc-7002

For configure-to-order configurations, the server can be preloaded with VMware ESXi installed on M.2 cards. Ordering information is listed in the following table.

Table 81. VMware ESXi preload

Feature code	Description
B88T	VMware ESXi 6.7 U3 (factory installed)
BBZG	VMware ESXi 7.0 (factory installed) (EPYC 7002 only)
BE5E	VMware ESXi 7.0 U1 (Factory Installed)
BHSR	VMware ESXi 7.0 U2 (Factory Installed)

You can download supported VMware vSphere hypervisor images from the following web page and load it on the M.2 drives or 7mm drives using the instructions provided:
https://vmware.lenovo.com/content/custom_iso/

Physical and electrical specifications

The SR665 has the following overall physical dimensions, excluding components that extend outside the standard chassis, such as EIA flanges, front security bezel (if any), and power supply handles:

- Width: 445 mm (17.5 inches)
- Height: 87 mm (3.4 inches)
- Depth: 764 mm (30.1 inches)

The following table lists the detailed dimensions. See the figure below for the definition of each dimension.

Table 82. Detailed dimensions

Dimension	Description
482 mm	X_a = Width, to the outsides of the front EIA flanges
435 mm	X_b = Width, to the rack rail mating surfaces
445 mm	X_c = Width, to the outer most chassis body feature
87 mm	Ya = Height, from the bottom of chassis to the top of the chassis
698 mm	Za = Depth, from the rack flange mating surface to the rearmost I/O port surface
730 mm	Zb = Depth, from the rack flange mating surface to the rearmost feature of the chassis body
727 mm (≤1100W PSU) 755 mm (1800W PSU) 781 mm (2400W PSU)	Zc = Depth, from the rack flange mating surface to the rearmost feature such as power supply handle
34 mm	Zd = Depth, from the forwardmost feature on front of EIA flange to the rack flange mating surface
46 mm	Ze = Depth, from the front of security bezel (if applicable) or forwardmost feature to the rack flange mating surface

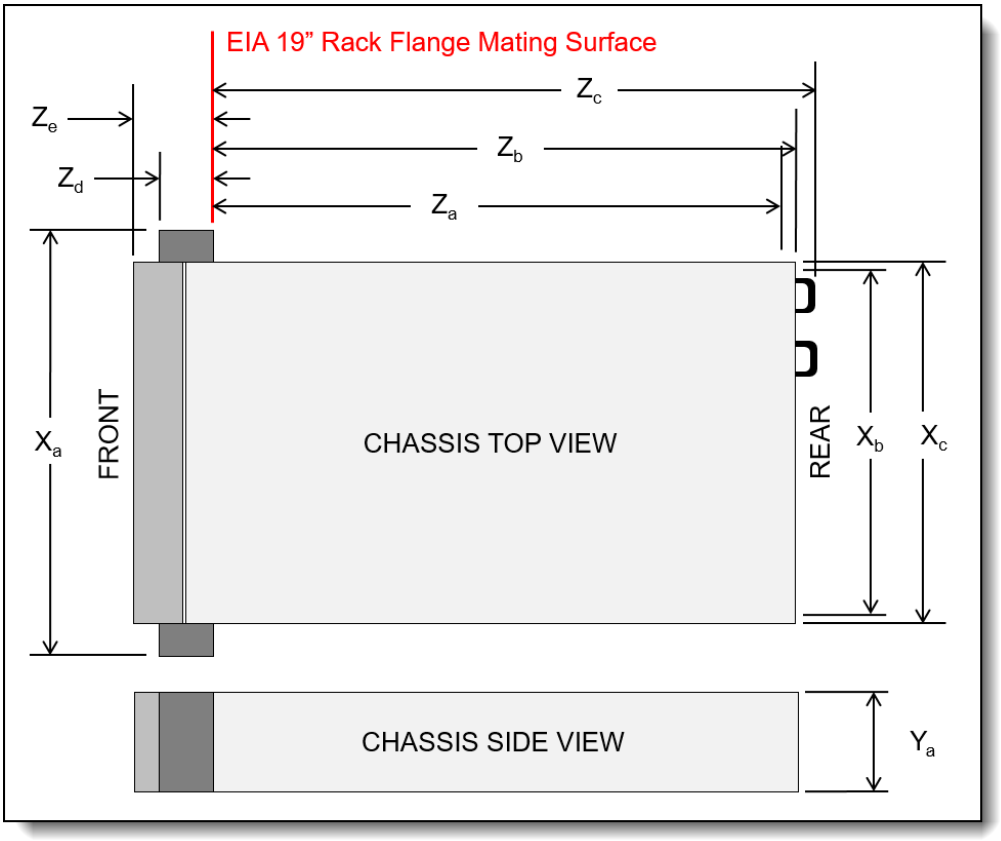

Figure 22. Server dimensions

The shipping dimensions (cardboard packaging) of the SR665 are as follows:

- Width: 592 mm (23.3 inches)
- Height: 282 mm (11.1 inches)
- Depth: 992 mm (39.1 inches)

The server has the following weight:

- Maximum weight: 38.8 kg (85.5 lb)

Electrical specifications for AC input power supplies:

- Input voltage:
  - 100 to 127 (nominal) Vac, 50 Hz or 60 Hz
  - 200 to 240 (nominal) Vac, 50 Hz or 60 Hz
  - 180 to 300 Vdc (China only)
- Inlet current:
  - 100-127 V:
    - 500W power supply: 5.7 A
    - 750W Platinum power supply: 8.4 A
    - 750W Titanium power supply: Not supported
    - 1100W power supply: 12 A*
    - 1800W power supply: Not supported
  - 200-240 V:
    - 500W power supply: 2.7 A
    - 750W Platinum power supply: 4.1 A
    - 750W Titanium power supply: 4.0 A
    - 1100W power supply: 6.0 A

- 1800W power supply: 10 A

* In China, this power supply cannot exceed 10 A current.

Electrical specifications for DC input power supply:

- Input voltage: -48 to -60 Vdc
- Inlet current (1100W power supply): 26 A

Operating environment

The SR665 server complies with ASHRAE Class A2 specifications with most configurations, and depending on the hardware configuration, also complies with ASHRAE Class A3 and Class A4 specifications.

The restrictions to ASHRAE A2 (10-35°C) support are as follows:

- Mellanox ConnectX-6 adapters with Active Optical Cables (AOCs), ambient temperature cannot exceed 30°C
- With 8x 3.5-inch or 8x 2.5-inch or 16x 2.5-inch front drive bays + double-wide GPUs, ambient temperature cannot exceed 30°C
- With 8x 3.5-inch or 16x 2.5-inch front drive bays + NVIDIA T4 GPU, ambient temperature cannot exceed 30°C

To comply with ASHRAE A3 (5-40°C) and A4 (5-45°C) specifications, the server models must meet the following hardware configuration requirements:

- No Mellanox ConnectX-6 adapters
- No Broadcom 57454 10GBASE-T 4-port OCP Ethernet Adapter, 4XC7A08240
- No GPUs
- No ≥170W TDP CPUs
- No NVMe PCIe AIC
- No ≥128G 3DS RDIMM
- Mid and rear drive support is per the tables below.

Mid and Rear drive support is listed in the following two tables. Note the for ASHRAE A2 support, there are some restrictions on the supported processors, based on the processor TDP value. These restrictions are indicated in the A2 Support column.

Tip: The configurations here match the ones described in the Internal Storage section.

Table 83. ASHRAE support based on drive bay configuration - 3.5-inch chassis (Blue = SAS/SATA, Purple = AnyBay, Red = NVMe) (S/S = SAS/SATA, Any = AnyBay)

	Front bays		Mid bays			Rear bays			
Cfg	**S/S 3.5"**	**AnyBay 3.5"**	**S/S 3.5"**	**S/S 2.5"**	**NVMe 2.5"**	**S/S 3.5"**	**S/S 2.5"**	**A2 Support**	**A3/A4 Support**
Configurations with 2 processors installed									
A	8	0	0	0	0	0	0	Supported	Supported
B	12	0	0	0	0	0	0	Supported	Supported
C	12	0	0	0	0	2	0	Supported (TDP ≤ 240W)	No support
D	12	0	0	0	0	4	0	Supported (TDP ≤ 240W)	No support
E	12	0	4	0	0	4	0	Supported (TDP ≤ 240W)	No support

Cfg	Front bays		Mid bays			Rear bays		A2 Support	A3/A4 Support
	S/S 3.5"	AnyBay 3.5"	S/S 3.5"	S/S 2.5"	NVMe 2.5"	S/S 3.5"	S/S 2.5"		
F	12	0	0	0	0	0	4	Supported (TDP ≤ 170W)	No support
G	12	0	4	0	0	0	4	Supported (TDP ≤ 170W)	No support
H	12	0	0	0	8	0	0	Supported	No support
I	0	12	0	0	0	0	0	Supported	Supported
J	0	12	0	0	0	4	0	Supported (TDP ≤ 240W)	No support
K	0	12	4	0	0	4	0	Supported (TDP ≤ 240W)	No support
Configurations with 1 processor installed									
L	8	0	0	0	0	0	0	Supported	Supported
M	12	0	0	0	0	0	0	Supported	Supported
N	12	0	0	0	0	2	0	Supported (TDP ≤ 240W)	No support
O	12	0	0	0	0	4	0	Supported (TDP ≤ 240W)	No support
P	12	0	0	0	0	0	4	Supported (TDP ≤ 170W)	No support

Table 84. ASHRAE support based on drive bay configuration - 2.5-inch chassis (Blue cells = SAS/SATA, Red cells = NVMe, Purple cells = AnyBay) (S/S = SAS/SATA, Any = AnyBay)

Cfg	Front bays			Mid bays			Rear bays		A2 Support	A3/A4 Support
	S/S 2.5"	Any 2.5"	NVMe 2.5"	S/S 3.5"	S/S 2.5"	NVMe 2.5"	S/S 3.5"	S/S 2.5"		
Configurations with 2 processors installed										
A	8	0	0	0	0	0	0	0	Supported	Supported
B	16	0	0	0	0	0	0	0	Supported	Supported
C	24	0	0	0	0	0	0	0	Supported	Supported
D	24	0	0	0	0	0	0	4	Supported (TDP ≤ 170W)	No support
E	24	0	0	0	8	0	0	4	Supported (TDP ≤ 170W)	No support
F	24	0	0	0	8	0	0	8	Supported (TDP ≤ 170W)	No support
G	0	0	8	0	0	0	0	0	Supported	Supported
H	0	0	16	0	0	0	0	0	Supported	Supported
I	0	0	24	0	0	0	0	0	Supported	Supported
J	0	0	24	0	0	8	0	0	Supported	No support
K	8	0	8	0	0	0	0	0	Supported	Supported
L	16	0	8	0	0	0	0	0	Supported	Supported
M	8	0	16	0	0	0	0	0	Supported	Supported
N	0	8	0	0	0	0	0	0	Supported	Supported
O	0	8	8	0	0	0	0	0	Supported	Supported
P	8	8	0	0	0	0	0	0	Supported	Supported
Q	16	8	0	0	0	0	0	0	Supported	Supported
R	16	8	0	0	0	0	0	4	Supported (TDP ≤ 170W)	No support
Configurations with 1 processor installed										
S	8	0	0	0	0	0	0	0	Supported	Supported

Cfg	Front bays			Mid bays			Rear bays		A2 Support	A3/A4 Support
	S/S 2.5"	Any 2.5"	NVMe 2.5"	S/S 3.5"	S/S 2.5"	NVMe 2.5"	S/S 3.5"	S/S 2.5"		
T	16	0	0	0	0	0	0	0	Supported	Supported
U	24	0	0	0	0	0	0	0	Supported	Supported
V	24	0	0	0	0	0	0	4	Supported (TDP ≤ 170W)	No support
W	0	0	8	0	0	0	0	0	Supported	Supported

Temperature and humidity

The server is supported in the following environment:

- Air temperature:
  - Operating:
    - ASHRAE Class A2: 10°C to 35°C (50°F to 95°F); the maximum ambient temperature decreases by 1°C for every 300 m (984 ft) increase in altitude above 900 m (2,953 ft).
    - ASHRAE Class A3: 5°C to 40°C (41°F to 104°F); the maximum ambient temperature decreases by 1°C for every 175 m (574 ft) increase in altitude above 900 m (2,953 ft).
    - ASHRAE Class A4: 5°C to 45°C (41°F to 113°F); the maximum ambient temperature decreases by 1°C for every 125 m (410 ft) increase in altitude above 900 m (2,953 ft).
  - Server off: 5°C to 45°C (41°F to 113°F)
  - Shipment/storage: -40°C to 60°C (-40°F to 140°F)
- Maximum altitude: 3,050 m (10,000 ft)
- Relative Humidity (non-condensing):
  - Operating
    - ASHRAE Class A2: 8% to 80%; maximum dew point: 21°C (70°F)
    - ASHRAE Class A3: 8% to 85%; maximum dew point: 24°C (75°F)
    - ASHRAE Class A4: 8% to 90%; maximum dew point: 24°C (75°F)
  - Shipment/storage: 8% to 90%

Heat output

The server generates the following heat:

- Heat/thermal output:
  - Minimum configuration: 825 BTU/hr, 242 W
  - Maximum configuration: 5715 BTU/hr, 1675 W

Acoustical noise emissions

The server has the following acoustic noise emissions declaration:

- Sound power level (L_{WAd}):
  - Idling: 6.1 Bel (Typical), 6.7 Bel (GPU rich), 7.4 Bel (Storage rich)
  - Operating: 6.3 Bel (Typical), 8.0 Bel (GPU rich), 7.4 Bel (Storage rich)
- Sound pressure level (L_{pAm}):
  - Idling: 43 dBA (Typical), 51 dBA (GPU rich), 56 dBA (Storage rich)
  - Operating: 46 dBA (Typical), 68 dBA (GPU rich), 56 dBA (Storage rich)

Notes:

- These sound levels were measured in controlled acoustical environments according to procedures specified by ISO7779 and are reported in accordance with ISO 9296.
- The declared acoustic sound levels are based on the configurations, which may change slightly depending on configuration/conditions, for example OCP cards such as the Broadcom 57454 and

the Marvell 41132 adapters.

- Typical: 2x 155W CPU, 32x 32GB RDIMM, 8x 2.5" HDD, 930-8i RAID,10/25GbE SFP28 2-port OCP, 2x 750W PSU
- GPU rich: 2x 155W CPU, 32x 64GB RDIMM, 8x 2.5" HDD, 930-8i RAID,10/25GbE SFP28 2-port OCP, 3x V100 GPU, 2x 1800W PSU
- Storage rich: 2x 155W CPU, 32x 64GB RDIMM, 20x 3.5" HDD, 930-16i RAID, 10/25GbE SFP28 2-port OCP, 2x 1100W PSU

Shock and vibration

The server has the following vibration and shock limits:

- Vibration:
  - Operating: 0.21 G rms at 5 Hz to 500 Hz for 15 minutes across 3 axes
  - Non-operating: 1.04 G rms at 2 Hz to 200 Hz for 15 minutes across 6 surfaces
- Shock:
  - Operating: 15 G for 3 milliseconds in each direction (positive and negative X, Y, and Z axes)
  - Non-operating:
    - 23 kg - 31 kg: 35 G for 152 in./sec velocity change across 6 surfaces (3x GPU config, 2.5” config)
    - 32 kg - 68 kg: 35 G for 136 in./sec velocity change across 6 surfaces (20x 3.5” HDD config)

Particulate contamination

Airborne particulates (including metal flakes or particles) and reactive gases acting alone or in combination with other environmental factors such as humidity or temperature might damage the system that might cause the system to malfunction or stop working altogether.

The following specifications indicate the limits of particulates that the system can tolerate:

- Reactive gases:
  - The reactivity rate of copper coupons shall be less than 200 Angstroms per month (Å/month)
  - The reactivity rate of silver coupons shall be less than 200 Å/month
- Airborne particulates:
  - The room air should be continuously filtered with MERV 8 filters.
  - Air entering a data center should be filtered with MERV 11 or preferably MERV 13 filters.
  - The deliquescent relative humidity of the particulate contamination should be more than 60% RH
  - Data centers must be free of zinc whiskers

For additional information, see the Specifications section of the Setup Guide for the server, available from the Lenovo ThinkSystem Information Center, https://thinksystem.lenovofiles.com/help/index.jsp

Warranty and Support

The SR665 has a 1-year or 3-year warranty based on the machine type of the system:

- 7D2W - 1 year warranty
- 7D2V - 3 year warranty

The standard warranty terms are customer-replaceable unit (CRU) and onsite (for field-replaceable units FRUs only) with standard call center support during normal business hours and 9x5 Next Business Day Parts Delivered.

Lenovo’s additional support services provide a sophisticated, unified support structure for your data center, with an experience consistently ranked number one in customer satisfaction worldwide. Available offerings include:

- **Premier Support**

  Premier Support provides a Lenovo-owned customer experience and delivers direct access to technicians skilled in hardware, software, and advanced troubleshooting, in addition to the following:

  - Direct technician-to-technician access through a dedicated phone line
  - 24x7x365 remote support
  - Single point of contact service
  - End to end case management
  - Third-party collaborative software support
  - Online case tools and live chat support
  - On-demand remote system analysis

- **Warranty Upgrade (Preconfigured Support)**

  Services are available to meet the on-site response time targets that match the criticality of your systems.

  - 3, 4, or 5 years of service coverage
  - 1-year or 2-year post-warranty extensions
  - **Foundation Service**: 9x5 service coverage with next business day onsite response. YourDrive YourData is an optional extra (see below).
  - **Essential Service:** 24x7 service coverage with 4-hour onsite response or 24-hour committed repair (available only in select markets). Bundled with YourDrive YourData.
  - **Advanced Service:** 24x7 service coverage with 2-hour onsite response or 6-hour committed repair (available only in select markets). Bundled with YourDrive YourData.

- **Managed Services**

  Lenovo Managed Services provides continuous 24x7 remote monitoring (plus 24x7 call center availability) and proactive management of your data center using state-of-the-art tools, systems, and practices by a team of highly skilled and experienced Lenovo services professionals.

  Quarterly reviews check error logs, verify firmware & OS device driver levels, and software as needed. We'll also maintain records of latest patches, critical updates, and firmware levels, to ensure you systems are providing business value through optimized performance.

- **Technical Account Management (TAM)**

  A Lenovo Technical Account Manager helps you optimize the operation of your data center based on a deep understanding of your business. You gain direct access to your Lenovo TAM, who serves as your single point of contact to expedite service requests, provide status updates, and furnish reports to track incidents over time. In addition, your TAM will help proactively make service recommendations and manage your service relationship with Lenovo to make certain your needs are met.

- **Enterprise Server Software Support**

  Enterprise Software Support is an additional support service providing customers with software support on Microsoft, Red Hat, SUSE, and VMware applications and systems. Around the clock availability for critical problems plus unlimited calls and incidents helps customers address challenges fast, without incremental costs. Support staff can answer troubleshooting and diagnostic questions, address product comparability and interoperability issues, isolate causes of problems, report defects to software vendors, and more.

- **YourDrive YourData**

  Lenovo's YourDrive YourData is a multi-drive retention offering that ensures your data is always under your control, regardless of the number of drives that are installed in your Lenovo server. In the unlikely event of a drive failure, you retain possession of your drive while Lenovo replaces the failed drive part. Your data stays safely on your premises, in your hands. The YourDrive YourData service can be purchased in convenient bundles and is optional with Foundation Service. It is bundled with Essential Service and Advanced Service.

- **Health Check**

  Having a trusted partner who can perform regular and detailed health checks is central to maintaining efficiency and ensuring that your systems and business are always running at their best. Health Check supports Lenovo-branded server, storage, and networking devices, as well as select Lenovo-supported products from other vendors that are sold by Lenovo or a Lenovo-Authorized Reseller.

Examples of region-specific warranty terms are second or longer business day parts delivery or parts-only base warranty.

If warranty terms and conditions include onsite labor for repair or replacement of parts, Lenovo will dispatch a service technician to the customer site to perform the replacement. Onsite labor under base warranty is limited to labor for replacement of parts that have been determined to be field-replaceable units (FRUs). Parts that are determined to be customer-replaceable units (CRUs) do not include onsite labor under base warranty.

If warranty terms include parts-only base warranty, Lenovo is responsible for delivering only replacement parts that are under base warranty (including FRUs) that will be sent to a requested location for self-service. Parts-only service does not include a service technician being dispatched onsite. Parts must be changed at customer's own cost and labor and defective parts must be returned following the instructions supplied with the spare parts.

Lenovo Service offerings are region-specific. Not all preconfigured support and upgrade options are available in every region. For information about Lenovo service upgrade offerings that are available in your region, refer to the following resources:

- Service part numbers in Lenovo Data Center Solution Configurator (DCSC):
  http://dcsc.lenovo.com/#/services
- Lenovo Services Availability Locator
  http://lenovolocator.com/

For service definitions, region-specific details, and service limitations, please refer to the following documents:

- Lenovo Statement of Limited Warranty for Infrastructure Solutions Group (ISG) Servers and System Storage
  http://pcsupport.lenovo.com/us/en/solutions/ht503310
- Lenovo Data Center Services Agreement
  http://support.lenovo.com/us/en/solutions/ht116628

Services

Lenovo Services is a dedicated partner to your success. Our goal is to reduce your capital outlays, mitigate your IT risks, and accelerate your time to productivity.

Note: Some service options may not be available in all countries. For more information, go to https://www.lenovo.com/services. For information about Lenovo service upgrade offerings that are available in your region, contact your local Lenovo sales representative or business partner.

Here’s a more in-depth look at what we can do for you:

- **Asset Recovery Services**

  Asset Recovery Services (ARS) helps customers recover the maximum value from their end-of-life equipment in a cost-effective and secure way. On top of simplifying the transition from old to new equipment, ARS mitigates environmental and data security risks associated with data center equipment disposal. Lenovo ARS is a cash-back solution for equipment based on its remaining market value, yielding maximum value from aging assets and lowering total cost of ownership for your customers. For more information, see the ARS page, https://lenovopress.com/lp1266-reduce-e-waste-and-grow-your-bottom-line-with-lenovo-ars.

- **Assessment Services**

  An Assessment helps solve your IT challenges through an onsite, multi-day session with a Lenovo technology expert. We perform a tools-based assessment which provides a comprehensive and thorough review of a company's environment and technology systems. In addition to the technology based functional requirements, the consultant also discusses and records the non-functional business requirements, challenges, and constraints. Assessments help organizations like yours, no matter how large or small, get a better return on your IT investment and overcome challenges in the ever-changing technology landscape.

- **Design Services**

  Professional Services consultants perform infrastructure design and implementation planning to support your strategy. The high-level architectures provided by the assessment service are turned into low level designs and wiring diagrams, which are reviewed and approved prior to implementation. The implementation plan will demonstrate an outcome-based proposal to provide business capabilities through infrastructure with a risk-mitigated project plan.

- **Basic Hardware Installation**

  Lenovo experts can seamlessly manage the physical installation of your server, storage, or networking hardware. Working at a time convenient for you (business hours or off shift), the technician will unpack and inspect the systems on your site, install options, mount in a rack cabinet, connect to power and network, check and update firmware to the latest levels, verify operation, and dispose of the packaging, allowing your team to focus on other priorities.

- **Deployment Services**

  When investing in new IT infrastructures, you need to ensure your business will see quick time to value with little to no disruption. Lenovo deployments are designed by development and engineering teams who know our Products & Solutions better than anyone else, and our technicians own the process from delivery to completion. Lenovo will conduct remote preparation and planning, configure & integrate systems, validate systems, verify and update appliance firmware, train on administrative tasks, and provide post-deployment documentation. Customer’s IT teams leverage our skills to enable IT staff to transform with higher level roles and tasks.

- **Integration, Migration, and Expansion Services**

  Move existing physical & virtual workloads easily, or determine technical requirements to support increased workloads while maximizing performance. Includes tuning, validation, and documenting ongoing run processes. Leverage migration assessment planning documents to perform necessary migrations.

Regulatory compliance

The server conforms to the following standards:

- Energy Star 3.0
- FCC: Verified to comply with Part 15 of the FCC Rules, Class A
- Canada ICES-003, issue 6, Class A
- UL/IEC 62368-1
- CAN/CSA-C22.2 No. 62368-1
- NOM-019
- Argentina IEC 62368-1
- Japan VCCI, Class A
- Australia/New Zealand AS/NZS CISPR 32, Class A; AS/NZS 60950.1
- IEC 60950-1 & IEC 62368-1 (CB Certificate and CB Test Report)
- China CCC (GB4943.1), GB9254 Class A, GB17625.1
- Taiwan BSMI CNS13438, Class A; CNS14336-1; section 5 of CNS15663
- Korea KN32, Class A; KN35
- Russia, Belorussia and Kazakhstan, EAC: TP TC 004/2011 (for Safety); TP TC 020/2011 (for EMC); TP EAC 037/2016 (for RoHS)
- CE Mark (EN55032 Class A, EN60950-1, EN62368-1, EN55024, EN55035, EN61000-3-2, (EU) 2019/424, EN 50581-1 and EN61000-3-3)
- CISPR 32, Class A
- TUV-GS (EN62368-1, EK1-ITB2000, AfPS GS 01 PAK Par. 3.1)
- India BIS certification

External drive enclosures

The server supports attachment to external drive enclosures using a RAID controller with external ports or a SAS host bus adapter. Adapters supported by the server are listed in the SAS adapters for external storage section.

Note: Information provided in this section is for ordering reference purposes only. For the operating system and adapter support details, refer to the interoperability matrix for a particular storage enclosure that can be found on the Lenovo Data Center Support web site:
http://datacentersupport.lenovo.com

Table 85. External drive enclosures

Description	Part number		
	Worldwide	Japan	PRC
Lenovo Storage D1212 LFF Disk Expansion with Dual SAS IO Modules	4587A11	4587A1J	4587A1C
Lenovo Storage D1224 SFF Disk Expansion with Dual SAS IO Modules	4587A31	4587A3J	4587A3C
Lenovo Storage D3284 4TB x 84 HD Expansion Enclosure	641311F		
Lenovo Storage D3284 6TB x 84 HD Expansion Enclosure	641312F		
Lenovo Storage D3284 8TB x 84 HD Expansion Enclosure	641313F		
Lenovo Storage D3284 10TB x 84 HD Expansion Enclosure	641314F		

For details about supported drives, adapters, and cables, see the following Lenovo Press Product Guides:

- Lenovo Storage D1212 and D1224
  http://lenovopress.com/lp0512
- Lenovo Storage D3284
  http://lenovopress.com/lp0513

External storage systems

Lenovo offers the ThinkSystem DE Series and ThinkSystem DM Series external storage systems for high-performance storage. See the DE Series and DM Series product guides for specific controller models, expansion enclosures and configuration options:

- ThinkSystem DE Series Storage
  https://lenovopress.com/storage/thinksystem/de-series#rt=product-guide
- ThinkSystem DM Series Storage
  https://lenovopress.com/storage/thinksystem/dm-series#rt=product-guide

External backup units

The server supports both USB-attached RDX backup units and SAS-attached tape drives.

The following table lists the available external SAS tape backup options.

Tip: Verify the end-to-end support of an IBM tape backup solution through the IBM System Storage Interoperation Center (SSIC): http://www.ibm.com/systems/support/storage/ssic

Table 86. External SAS backup options

Part number	Description
External SAS tape backup drives	
6160S6E	IBM TS2260 Tape Drive Model H6S
6160S7E	IBM TS2270 Tape Drive Model H7S
6160S8E	IBM TS2280 Tape Drive Model H8S
External SAS tape backup autoloaders	
6171S6R	IBM TS2900 Tape Autoloader w/LTO6 HH SAS
6171S7R	IBM TS2900 Tape Autoloader w/LTO7 HH SAS
6171S8R	IBM TS2900 Tape Autoloader w/LTO8 HH SAS
External tape backup libraries	
6741A1F	IBM TS4300 3U Tape Library-Base Unit
SAS backup drives for TS4300 Tape Library	
01KP934	LTO 6 HH SAS Drive
01KP937	LTO 7 HH SAS Drive
01KP953	LTO 8 HH SAS Drive

For more information, see the list of Product Guides in the Backup units category: https://lenovopress.com/servers/options/backup

The following table lists the external RDX backup options available.

Table 87. External RDX dock and cartridges

Part number	Feature code	Description
External RDX docks		
4T27A10725	B32R	ThinkSystem RDX External USB 3.0 Dock (No cartridge included with the drive)
Cartridges		
7TP7A01601	AVF8	ThinkSystem RDX 500GB Cartridge
7TP7A01602	AVF1	ThinkSystem RDX 1TB Cartridge
7TP7A01603	AVF0	ThinkSystem RDX 2TB Cartridge
7TP7A04318	AXD1	ThinkSystem RDX 4TB Cartridge

For more information, see the Lenovo RDX USB 3.0 Disk Backup Solution product guide: https://lenovopress.com/tips0894-rdx-usb-30

Fibre Channel SAN switches

Lenovo offers the ThinkSystem DB Series of Fibre Channel SAN switches for high-performance storage expansion. See the DB Series product guides for models and configuration options:

- ThinkSystem DB Series SAN Switches:
  https://lenovopress.com/storage/switches/rack#rt=product-guide

Uninterruptible power supply units

The following table lists the uninterruptible power supply (UPS) units that are offered by Lenovo.

Table 88. Uninterruptible power supply units

Part number	Description
55941AX	RT1.5kVA 2U Rack or Tower UPS (100-125VAC)
55941KX	RT1.5kVA 2U Rack or Tower UPS (200-240VAC)
55942AX	RT2.2kVA 2U Rack or Tower UPS (100-125VAC)
55942KX	RT2.2kVA 2U Rack or Tower UPS (200-240VAC)
55943AX	RT3kVA 2U Rack or Tower UPS (100-125VAC)
55943KX	RT3kVA 2U Rack or Tower UPS (200-240VAC)
55945KX	RT5kVA 3U Rack or Tower UPS (200-240VAC)
55946KX	RT6kVA 3U Rack or Tower UPS (200-240VAC)
55948KX	RT8kVA 6U Rack or Tower UPS (200-240VAC)
55949KX	RT11kVA 6U Rack or Tower UPS (200-240VAC)
55948PX	RT8kVA 6U 3:1 Phase Rack or Tower UPS (380-415VAC)
55949PX	RT11kVA 6U 3:1 Phase Rack or Tower UPS (380-415VAC)
55943KT†	ThinkSystem RT3kVA 2U Standard UPS (200-230VAC) (2x C13 10A, 2x GB 10A, 1x C19 16A outlets)
55943LT†	ThinkSystem RT3kVA 2U Long Backup UPS (200-230VAC) (2x C13 10A, 2x GB 10A, 1x C19 16A outlets)
55946KT†	ThinkSystem RT6kVA 5U UPS (200-230VAC) (2x C13 10A outlets, 1x Terminal Block output)
5594XKT†	ThinkSystem RT10kVA 5U UPS (200-230VAC) (2x C13 10A outlets, 1x Terminal Block output)

† Only available in China and countries in the Asia Pacific region.

For more information, see the list of Product Guides in the UPS category:
https://lenovopress.com/servers/options/ups

Power distribution units

The following table lists the power distribution units (PDUs) that are offered by Lenovo.

Table 89. Power distribution units

Part number	Feature code	Description	ANZ	ASEAN	Brazil	EET	MEA	RUCIS	WE	HTK	INDIA	JAPAN	LA	NA	PRC
0U Basic PDUs															
00YJ776	ATZY	0U 36 C13/6 C19 24A 1 Phase PDU	N	Y	Y	N	N	N	N	N	N	Y	Y	Y	N
00YJ777	ATZZ	0U 36 C13/6 C19 32A 1 Phase PDU	Y	Y	N	Y	Y	Y	Y	Y	Y	N	N	Y	Y
00YJ778	AU00	0U 21 C13/12 C19 32A 3 Phase PDU	Y	Y	N	Y	Y	Y	Y	Y	Y	N	N	Y	Y
00YJ779	ATZX	0U 21 C13/12 C19 48A 3 Phase PDU	N	N	Y	N	N	N	Y	N	N	Y	Y	Y	N
0U Switched and Monitored PDUs															
00YJ780	AU01	0U 20 C13/4 C19 Switched and Monitored 32A 1 Phase PDU	Y	Y	Y	Y	Y	Y	Y	Y	Y	N	Y	N	Y
00YJ781	AU03	0U 20 C13/4 C19 Switched and Monitored 24A 1 Phase PDU	N	N	Y	N	Y	N	Y	N	N	Y	Y	Y	N
00YJ782	AU02	0U 18 C13/6 C19 Switched and Monitored 32A 3 Phase PDU	Y	Y	Y	Y	Y	Y	Y	Y	Y	N	Y	N	Y
00YJ783	AU04	0U 12 C13/12 C19 Switched and Monitored 48A 3 Phase PDU	N	N	Y	N	N	N	Y	N	N	Y	Y	Y	N
1U Ultra Density Enterprise PDUs (9x IEC 320 C13 + 3x IEC 320 C19 outlets)															
71763NU	6051	Ultra Density Enterprise C19/C13 PDU 60A/208V/3PH	N	N	Y	N	N	N	N	N	N	Y	Y	Y	N
71762NX	6091	Ultra Density Enterprise C19/C13 PDU Module	Y	Y	Y	Y	Y	Y	Y	Y	Y	Y	Y	Y	Y
1U C13 Enterprise PDUs (12x IEC 320 C13 outlets)															
39M2816	6030	DPI C13 Enterprise PDU Plus Module (WW)	Y	Y	Y	Y	Y	Y	Y	Y	Y	Y	Y	Y	Y
39Y8941	6010	DPI C13 Enterprise PDU Module (WW)	Y	Y	Y	Y	Y	Y	Y	Y	Y	Y	Y	Y	Y
1U C19 Enterprise PDUs (6x IEC 320 C19 outlets)															
39Y8948	6060	DPI C19 Enterprise PDU Module (WW)	Y	Y	Y	Y	Y	Y	Y	Y	Y	Y	Y	Y	Y
39Y8923	6061	DPI Three-phase 60A/208V C19 Enterprise PDU (US)	N	N	Y	N	N	N	Y	N	N	N	Y	Y	N
1U Front-end PDUs (3x IEC 320 C19 outlets)															
39Y8938	6002	DPI Single-phase 30A/120V Front-end PDU (US)	Y	Y	Y	Y	Y	Y	Y	Y	Y	Y	Y	Y	Y
39Y8939	6003	DPI Single-phase 30A/208V Front-end PDU (US)	Y	Y	Y	Y	Y	Y	Y	Y	Y	Y	Y	Y	Y
39Y8934	6005	DPI Single-phase 32A/230V Front-end PDU (International)	Y	Y	Y	Y	Y	Y	Y	Y	Y	Y	Y	Y	Y
39Y8940	6004	DPI Single-phase 60A/208V Front-end PDU (US)	Y	N	Y	Y	Y	Y	Y	N	N	Y	Y	Y	N
39Y8935	6006	DPI Single-phase 63A/230V Front-end PDU (International)	Y	Y	Y	Y	Y	Y	Y	Y	Y	Y	Y	Y	Y
1U NEMA PDUs (6x NEMA 5-15R outlets)															
39Y8905	5900	DPI 100-127V NEMA PDU	Y	Y	Y	Y	Y	Y	Y	Y	Y	Y	Y	Y	Y
Line cords for 1U PDUs that ship without a line cord															

Part number	Feature code	Description	ANZ	ASEAN	Brazil	EET	MEA	RUCIS	WE	HTK	INDIA	JAPAN	LA	NA	PRC
40K9611	6504	4.3m, 32A/380-415V, EPDU/IEC 309 3P+N+G 3ph wye (non-US) Line Cord	Y	Y	Y	Y	Y	Y	Y	Y	Y	Y	Y	Y	Y
40K9612	6502	4.3m, 32A/230V, EPDU to IEC 309 P+N+G (non-US) Line Cord	Y	Y	Y	Y	Y	Y	Y	Y	Y	Y	Y	Y	Y
40K9613	6503	4.3m, 63A/230V, EPDU to IEC 309 P+N+G (non-US) Line Cord	Y	Y	Y	Y	Y	Y	Y	Y	Y	Y	Y	Y	Y
40K9614	6500	4.3m, 30A/208V, EPDU to NEMA L6-30P (US) Line Cord	Y	Y	Y	Y	Y	Y	Y	Y	Y	Y	Y	Y	Y
40K9615	6501	4.3m, 60A/208V, EPDU to IEC 309 2P+G (US) Line Cord	N	N	Y	N	N	N	Y	N	N	Y	Y	Y	N
40K9617	6505	4.3m, 32A/230V, Souriau UTG Female to AS/NZ 3112 (Aus/NZ) Line Cord	Y	Y	Y	Y	Y	Y	Y	Y	Y	Y	Y	Y	Y
40K9618	6506	4.3m, 32A/250V, Souriau UTG Female to KSC 8305 (S. Korea) Line Cord	Y	Y	Y	Y	Y	Y	Y	Y	Y	Y	Y	Y	Y

For more information, see the Lenovo Press documents in the PDU category:
https://lenovopress.com/servers/options/pdu

Rack cabinets

The following table lists the supported rack cabinets.

Table 90. Rack cabinets

Part number	Description
93072RX	25U Standard Rack
93072PX	25U Static S2 Standard Rack
93634PX	42U 1100mm Dynamic Rack
93634EX	42U 1100mm Dynamic Expansion Rack
93604PX	42U 1200mm Deep Dynamic Rack
93614PX	42U 1200mm Deep Static Rack
93084EX	42U Enterprise Expansion Rack
93084PX	42U Enterprise Rack
93074RX	42U Standard Rack

For specifications about these racks, see the Lenovo Rack Cabinet Reference, available from:
https://lenovopress.com/lp1287-lenovo-rack-cabinet-reference

For more information, see the list of Product Guides in the Rack cabinets category:
https://lenovopress.com/servers/options/racks

KVM console options

The following table lists the supported KVM consoles.

Table 91. KVM console

Part number	Description
4XF7A73009	ThinkSystem 18.5" LCD Console (with English keyboard)

The following table lists the available KVM switches and the options that are supported with them.

Table 93. KVM switches and options

Part number	Description
KVM Console switches	
1754D1T	ThinkSystem Digital 2x1x16 KVM Switch (DVI video output port)
1754A1T	ThinkSystem Analog 1x8 KVM Switch (DVI video output port)
1754D2X	Global 4x2x32 Console Manager (GCM32)
1754D1X	Global 2x2x16 Console Manager (GCM16)
1754A2X	Local 2x16 Console Manager (LCM16)
1754A1X	Local 1x8 Console Manager (LCM8)
Cables for ThinkSystem Digital and Analog KVM Console switches	
4X97A11108	ThinkSystem VGA to DVI Conversion Cable
4X97A11109	ThinkSystem Single-USB Conversion Cable for Digital KVM
4X97A11107	ThinkSystem Dual-USB Conversion Cable for Digital KVM
4X97A11106	ThinkSystem USB Conversion Cable for Analog KVM
Cables for GCM and LCM Console switches	
46M5383	Virtual Media Conversion Option Gen2 (VCO2)
46M5382	Serial Conversion Option (SCO)

For more information, see the list of Product Guides in the KVM Switches and Consoles category: http://lenovopress.com/servers/options/kvm

Lenovo Financial Services

Lenovo Financial Services reinforces Lenovo's commitment to deliver pioneering products and services that are recognized for their quality, excellence, and trustworthiness. Lenovo Financial Services offers financing solutions and services that complement your technology solution anywhere in the world.

We are dedicated to delivering a positive finance experience for customers like you who want to maximize your purchase power by obtaining the technology you need today, protect against technology obsolescence, and preserve your capital for other uses.

We work with businesses, non-profit organizations, governments and educational institutions to finance their entire technology solution. We focus on making it easy to do business with us. Our highly experienced team of finance professionals operates in a work culture that emphasizes the importance of providing outstanding customer service. Our systems, processes and flexible policies support our goal of providing customers with a positive experience.

We finance your entire solution. Unlike others, we allow you to bundle everything you need from hardware and software to service contracts, installation costs, training fees, and sales tax. If you decide weeks or months later to add to your solution, we can consolidate everything into a single invoice.

Our Premier Client services provide large accounts with special handling services to ensure these complex transactions are serviced properly. As a premier client, you have a dedicated finance specialist who manages your account through its life, from first invoice through asset return or purchase. This specialist develops an in-depth understanding of your invoice and payment requirements. For you, this dedication provides a high-quality, easy, and positive financing experience.

For your region-specific offers, please ask your Lenovo sales representative or your technology provider about the use of Lenovo Financial Services. For more information, see the following Lenovo website:

https://www.lenovo.com/us/en/landingpage/lenovo-financial-services/

Related publications and links

For more information, see these resources:

- ThinkSystem SR665 product page:
  https://www.lenovo.com/us/en/data-center/servers/racks/ThinkSystem-SR665-Server/p/77XX7SR552S
- ThinkSystem SR665 datasheet
  https://lenovopress.com/DS0109
- Interactive 3D Tour of the ThinkSystem SR665:
  https://lenovopress.com/lp1291
- Lenovo Press video walk-through of the ThinkSystem SR665:
  https://lenovopress.com/lp1293
- ThinkSystem SR665 drivers and support
  http://datacentersupport.lenovo.com/products/servers/thinksystem/sr665/7d2v/downloads
- Lenovo Hardware Installation & Removal Videos on the SR665:
  - YouTube: https://www.youtube.com/playlist?list=PLYV5R7hVcs-Bz2XIeLEfGcrLGm9TSY_yt
  - Youku: http://list.youku.com/albumlist/show/id_52339612.html
- Lenovo ThinkSystem SR665 product publications:
  http://thinksystem.lenovofiles.com/help/index.jsp
  - Quick Start
  - Rack Installation Guide
  - Setup Guide
  - Hardware Maintenance Manual
  - Messages and Codes Reference
  - Memory Population Reference
- ServerProven hardware compatibility:
  http://www.lenovo.com/us/en/serverproven

Related product families

Product families related to this document are the following:

- 2-Socket Rack Servers
- ThinkSystem SR665 Server

Notices

Lenovo may not offer the products, services, or features discussed in this document in all countries. Consult your local Lenovo representative for information on the products and services currently available in your area. Any reference to a Lenovo product, program, or service is not intended to state or imply that only that Lenovo product, program, or service may be used. Any functionally equivalent product, program, or service that does not infringe any Lenovo intellectual property right may be used instead. However, it is the user's responsibility to evaluate and verify the operation of any other product, program, or service. Lenovo may have patents or pending patent applications covering subject matter described in this document. The furnishing of this document does not give you any license to these patents. You can send license inquiries, in writing, to:

Lenovo (United States), Inc.
8001 Development Drive
Morrisville, NC 27560
U.S.A.
Attention: Lenovo Director of Licensing

LENOVO PROVIDES THIS PUBLICATION ”AS IS” WITHOUT WARRANTY OF ANY KIND, EITHER EXPRESS OR IMPLIED, INCLUDING, BUT NOT LIMITED TO, THE IMPLIED WARRANTIES OF NON-INFRINGEMENT, MERCHANTABILITY OR FITNESS FOR A PARTICULAR PURPOSE. Some jurisdictions do not allow disclaimer of express or implied warranties in certain transactions, therefore, this statement may not apply to you.

This information could include technical inaccuracies or typographical errors. Changes are periodically made to the information herein; these changes will be incorporated in new editions of the publication. Lenovo may make improvements and/or changes in the product(s) and/or the program(s) described in this publication at any time without notice.

The products described in this document are not intended for use in implantation or other life support applications where malfunction may result in injury or death to persons. The information contained in this document does not affect or change Lenovo product specifications or warranties. Nothing in this document shall operate as an express or implied license or indemnity under the intellectual property rights of Lenovo or third parties. All information contained in this document was obtained in specific environments and is presented as an illustration. The result obtained in other operating environments may vary. Lenovo may use or distribute any of the information you supply in any way it believes appropriate without incurring any obligation to you.

Any references in this publication to non-Lenovo Web sites are provided for convenience only and do not in any manner serve as an endorsement of those Web sites. The materials at those Web sites are not part of the materials for this Lenovo product, and use of those Web sites is at your own risk. Any performance data contained herein was determined in a controlled environment. Therefore, the result obtained in other operating environments may vary significantly. Some measurements may have been made on development-level systems and there is no guarantee that these measurements will be the same on generally available systems. Furthermore, some measurements may have been estimated through extrapolation. Actual results may vary. Users of this document should verify the applicable data for their specific environment.

© Copyright Lenovo 2022. All rights reserved.

This document, LP1269, was created or updated on March 18, 2022.

Send us your comments in one of the following ways:

- Use the online Contact us review form found at:
  https://lenovopress.com/LP1269
- Send your comments in an e-mail to:
  comments@lenovopress.com

This document is available online at https://lenovopress.com/LP1269.

Trademarks

Lenovo and the Lenovo logo are trademarks or registered trademarks of Lenovo in the United States, other countries, or both. A current list of Lenovo trademarks is available on the Web at https://www.lenovo.com/us/en/legal/copytrade/.

The following terms are trademarks of Lenovo in the United States, other countries, or both:
Lenovo®
AnyBay®
Bootable Media Creator
Flex System
Lenovo Services
RackSwitch
ServerProven®
System x®
ThinkServer®
ThinkSystem
TopSeller
TruDDR4
UpdateXpress System Packs
XClarity®

The following terms are trademarks of other companies:

Intel® is a trademark of Intel Corporation or its subsidiaries.

Linux® is the trademark of Linus Torvalds in the U.S. and other countries.

ActiveX®, Microsoft®, Windows Server®, and Windows® are trademarks of Microsoft Corporation in the United States, other countries, or both.

Other company, product, or service names may be trademarks or service marks of others.