

TQHDA-02C

User Manual

USB to SATA Adapter for hard disks of 2.5 and 3.5” with power supply,
USB 3.0/3.1 Gen 1.

Content

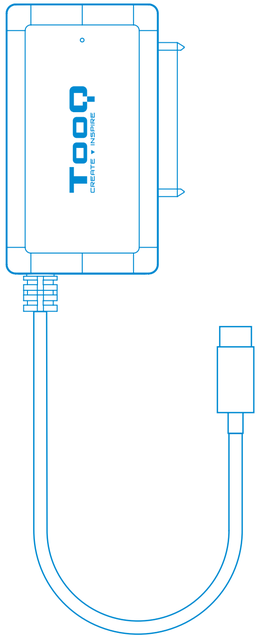

1 x Adapter

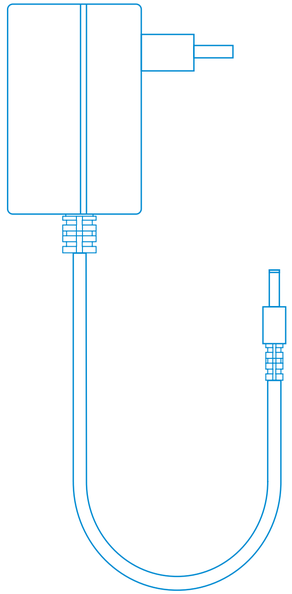

1 x Power Supply

System requirements, hard disk partition and file format

The USB to SATA Adapter is Plug and Play and lets connect to SATA disk of 2.5” or 3.5” (HDD or SSD) through the USB-C PORT of any device Windows, MacOS or Linux. Click here to see its guarantee.

The system will not recognise the new hard drives until you create partitions and format them. This operation can be performed on systems based on:

Windows: Equipment (Right button) → Manage → Storage → Disk administrator.

Mac: Finder → Go → Utilities → Disk Utility.

Linux: System → System Administration → Disk Utility.



In case of hard disk failure:
- Check that the disk partition and file formal partition have been performed.
- Check that the hard disk is in optimum condition. If this is not the case, contact the manufacturer or distributor.

Adapter diagram

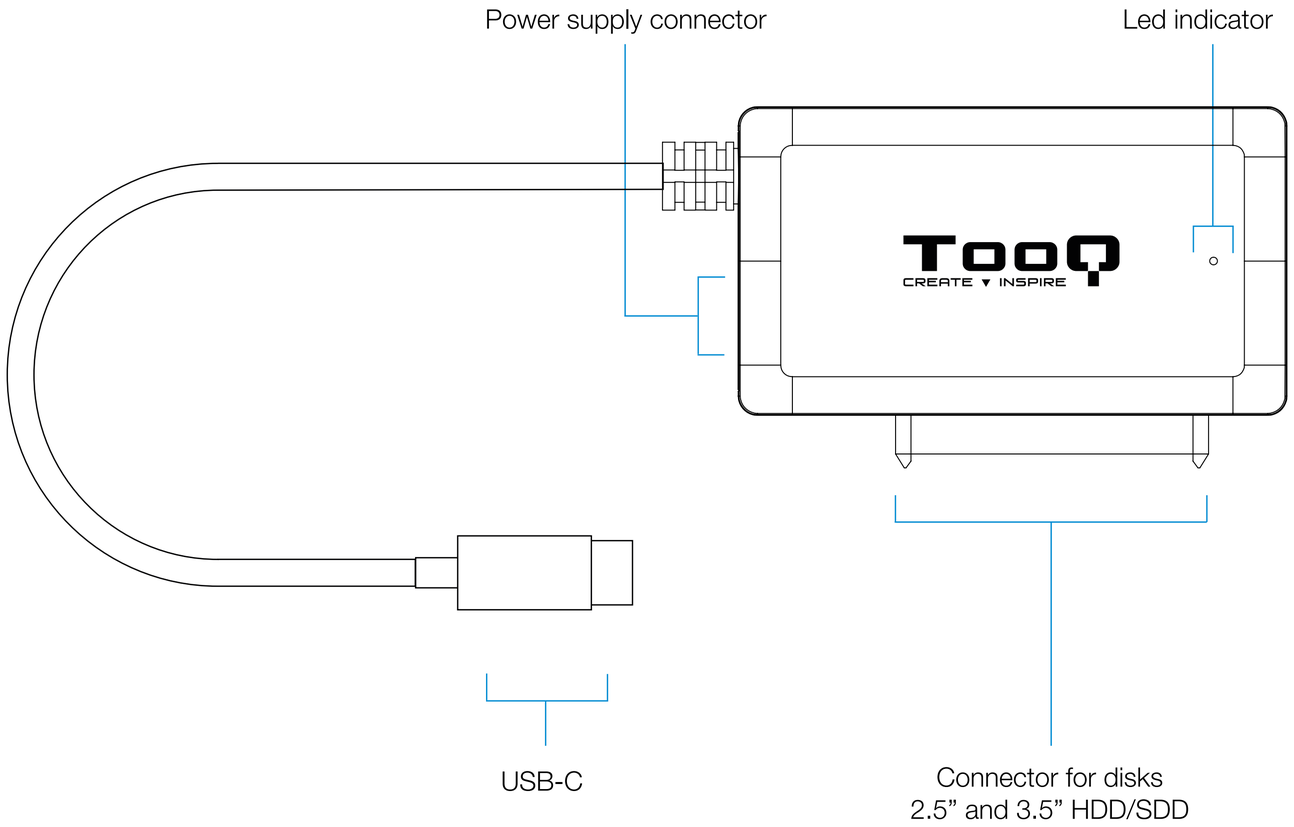

Installation and implementation

1 Connect the adapter to the device.
The transfer speed will be adapted to the version of the USB port of the device.

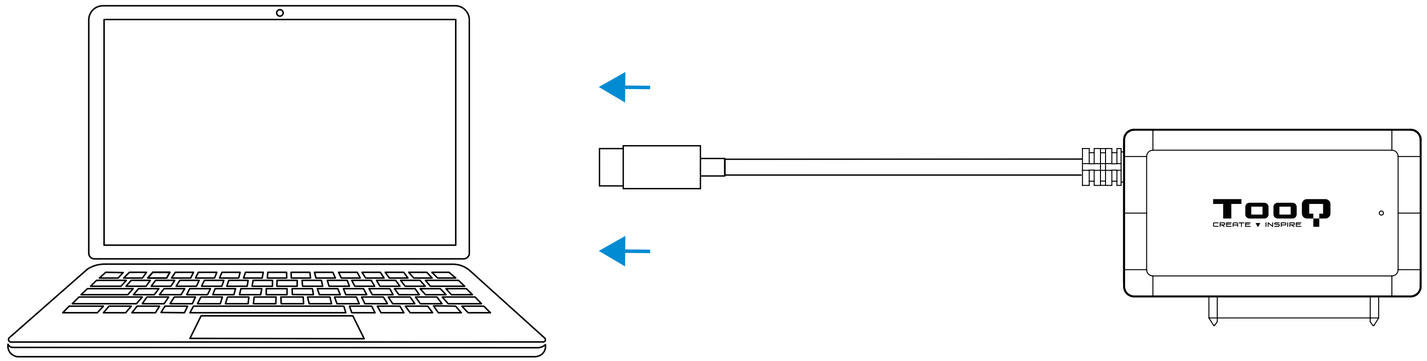

Installation and implementation

2a Connect the disk of 2.5” (SSD or HDD) to the adapter.

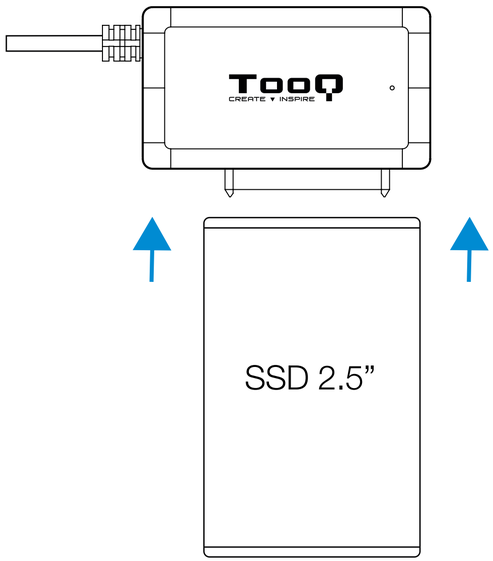

2b Connect the disk of 3.5” to the adapter. For this size is neccessary to connect the power aupply cable included in the package.

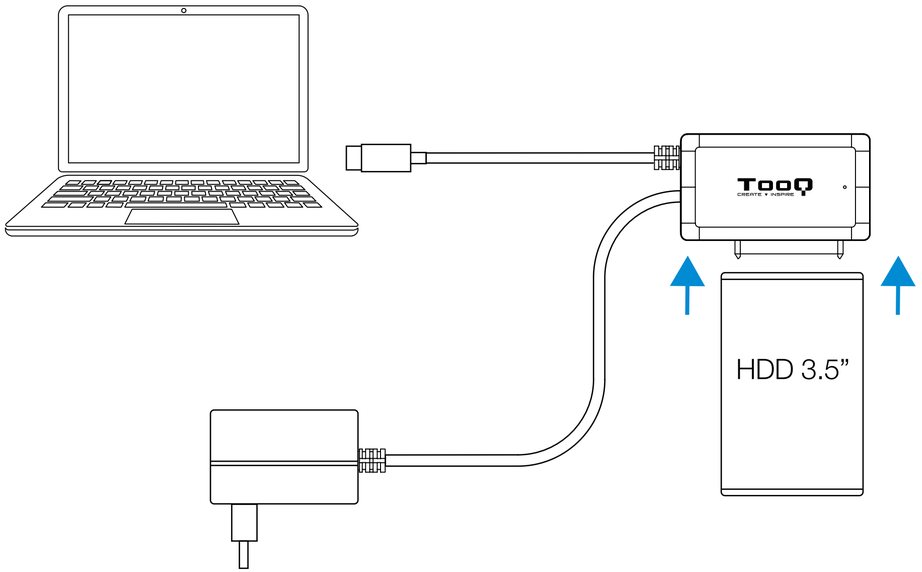

Keep up with the latest news!

Follow us on social networks

©2022 by TooQ Technology, S.L.
All Rights Reserved.
tooq.com