# User Guide

Quality, Design and Innovation

home.liebherr.com/fridge-manuals

LIEBHERR

# Contents


**1 Appliance at a glance..... 3**
1.1 Scope of delivery..... 3
1.2 Overview of the appliance and features..... 3
1.3 Appliance range of use..... 3
1.4 Conformity..... 4
1.5 EPREL database..... 4

**2 General safety instructions..... 4**

**3 Putting into operation..... 5**
3.1 Switching on appliance..... 5
3.2 Inserting the components..... 5

**4 Foods management..... 6**
4.1 Storing food..... 6
4.2 Storage times..... 6

**5 Saving energy..... 7**

**6 Controls..... 7**
6.1 Controls and displays..... 7
6.1.1 Status display..... 7
6.1.2 Navigation..... 7
6.1.3 Display symbols..... 7
6.2 Control concept..... 7
6.2.1 Activating/deactivating the function..... 7
6.2.2 Selecting function value..... 8
6.2.3 Activating/deactivating settings..... 8
6.2.4 Go to the Customer menu..... 8
6.3 Functions..... 8
Temperature..... 8
SuperCool..... 9
SuperFrost..... 9
PowerCool..... 9
PartyMode..... 9
HolidayMode..... 9
EnergySaver..... 10
IceMaker / MaxIce*..... 10
6.4 Settings..... 10
Language..... 10
Connecting to the WLAN..... 10
Entry lock..... 11
Display brightness..... 11
Door alarm..... 11
Temperature unit..... 11
Info..... 11
SabbathMode..... 11
TubeClean*..... 12
Ice cubes*..... 12
Reminder..... 12
Turn off appliance..... 12
6.5 Warnings..... 12
6.5.1 Message..... 12
6.5.2 DemoMode..... 13

**7 Features..... 13**
7.1 Door rack..... 13
7.2 Shelves..... 13
7.3 Dividing shelf..... 14
7.4 VarioSafe*..... 14
7.5 Drawers..... 15
7.6 EasyFresh-Safe cover..... 15
7.7 Adjusting the moisture levels..... 15
7.8 EasyTwist-Ice*..... 16
7.9 IceMaker*..... 16
7.10 VarioSpace..... 17
7.11 Accessories..... 17

**8 Maintenance..... 18**
8.1 FreshAir carbon filter..... 18
8.2 Defrosting the appliance..... 18
8.3 Cleaning the appliance..... 18

**9 Customer help..... 20**
9.1 Technical specifications..... 20
9.2 Operating noises..... 21
9.3 Technical fault..... 21
9.4 Customer Services..... 22
9.5 Model plate..... 22

**10 Shutting down..... 23**

**11 Disposal..... 23**
11.1 Preparing appliance for disposal..... 23
11.2 Disposing of the appliance in an environmentally friendly manner..... 23


The manufacturer is continually working on the further development of all types and models. Please be aware that we reserve the right to make changes to the shape, equipment and technology.

| Symbol | Explanation |
|---|---|
|  | **Read instructions**<br>Please read the information in these instructions carefully to understand all of the benefits of your new appliance. |

| Symbol | Explanation |
|---|---|
| | **Full instructions on the internet**<br>The detailed instructions are available via the QR code on the front of these instructions, at **home.liebherr.com/fridge-manuals** or by entering the service number at **home.liebherr.com/fridge-manuals**.<br>The service number can be found on the serial tag *Fig. ()*.<br>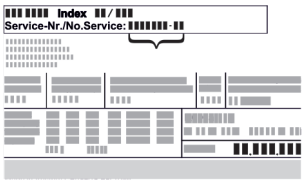<br>*Fig.* Example illustration |
| | **Check appliance**<br>Check all parts for transport damage. If you have any complaints, please contact your agent or customer service. |
| | **Differences**<br>These instructions apply to a range of models, so differences are possible. Sections that apply to certain models only are marked with an asterisk (*). |
| | **Instructions and results**<br>Instructions are marked with a ▶.<br>Results are marked with a ▷. |
| | **Installation videos**<br>You can find videos on installing appliances on the Liebherr-Hausgeräte YouTube channel. |

These operating instructions apply to:

| | |
|---|---|
| CN (sf) (e) | 52.. |
| CN (sf) (bd) (d) (e) | 57.. |

**Note**
If your appliance has an N in its appliance designation, it is a NoFrost appliance.

# 1 Appliance at a glance

## 1.1 Scope of delivery

Check all parts for damage during transport. If you have any complaints, please contact your retailer or Customer Services (see 9.4 Customer Services) .

Your new appliance comes with the following parts:

- Standalone appliance
- Features (depending on the model)
- Installation materials (depending on the model)
- “Quick Start Guide”
- “Installation Guide”
- Service Brochure

## 1.2 Overview of the appliance and features

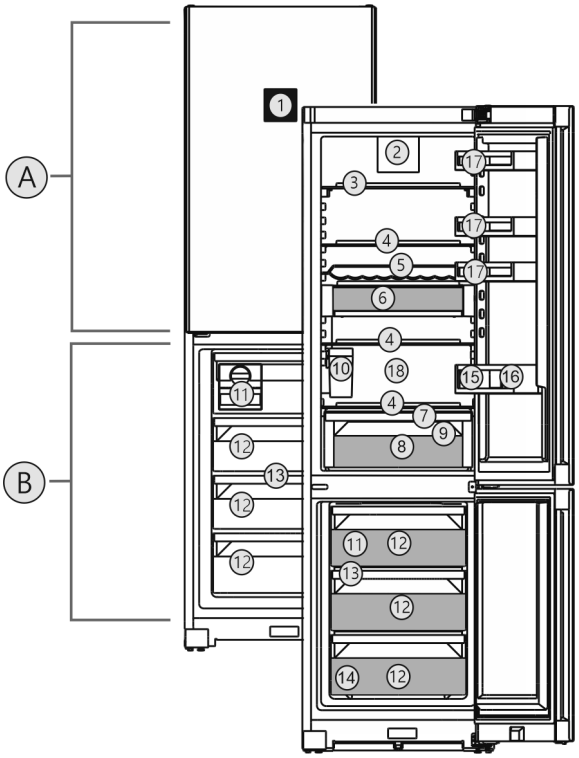


*Fig. 1 Example illustration*

**Temperature range**

**(A)** Fridge compartment **(B)** Freezer compartment

**Features**

**(1)** Control elements in the door
**(2)** Fan with FreshAiracti-vated charcoal filter
**(3)** Separable storage shelf
**(4)** Storage shelf
**(5)** Bottle shelf
**(6)** VarioSafe
**(7)** Lid for EasyFresh-Safe
**(8)** EasyFresh-Safe
**(9)** Outlet
**(10)** IceMaker water tank*
**(11)** EasyTwist-Ice* / IceMaker*
**(12)** Freezer compartment
**(13)** VarioSpace
**(14)** Serial tag
**(15)** Bottle rack
**(16)** Bottle holder
**(17)** Can rack*
**(18)** Coldest zone

**Note**
▶ Shelves, drawers and baskets are arranged for optimum energy efficiency when the appliance is delivered. Changing how the shelves, for example, are inserted in the fridge compartment does not have any impact on energy consumption.

## 1.3 Appliance range of use

### Intended use

The appliance is only suitable for cooling food products in a domestic or household-like environment. This includes, for example, use:

- in staff kitchens, bed and breakfast establishments,
- by guests in country houses, hotels, motels and other accommodation,
- for catering and similar services in the wholesale trade.

The appliance is not suitable as a built-in unit.

All other types of use are not permitted.

**Foreseeable misuse**

The following applications are expressly forbidden:

- Storing and refrigerating medicines, blood plasma, laboratory preparations or similar substances and products based on the Medical Device Directive 2007/47/EC
- Use in areas at risk of explosions

Misusing the appliance may lead to damage to the goods stored or they may spoil.

**Climate classifications**

Depending on the climate classification the appliance is designed to operate in restricted ambient temperatures. The climate classification applying to your appliance is printed on the rating plate.

**Note**

▶ Keep to the specified ambient temperatures in order to guarantee that the appliance works properly.

| Climate classification | for ambient temperatures of |
|---|---|
| SN | 10 °C to 32 °C |
| N | 16 °C to 32 °C |
| ST | 16 °C to 38 °C |
| T | 16 °C to 43 °C |

## 1.4 Conformity

The refrigerant circuit has been tested for leaks. This device complies with the applicable safety regulations and with the directives 2014/35/EU, 2014/30/EU, 2009/125/EC, 2011/65/EU, 2010/30/EU and 2014/53/EU.

The full text of the EU Declaration of Conformity is available on the following website: www.Liebherr.com

## 1.5 EPREL database

Details about energy labelling and ecodesign requirements will be available on the European product database (EPREL) from 1st March 2021. You can access the product database at the following link: https://eprel.ec.europa.eu/ You will be asked to enter the model ID. You can find the model ID on the nameplate.

# 2 General safety instructions

**Danger for the user:**

- This device can be used by children and people with impaired physical, sensory or mental abilities or with a lack of experience and knowledge provided that they are supervised or have received instruction in the safe use of this device, and about the resulting hazards. Children must not play with this appliance. Cleaning and user maintenance work must not be carried out by children without adult supervision. Children aged between 3 and 8 are allowed to load and unload the appliance. Children below the age of 3 must be kept away from the appliance unless they are under continuous adult supervision.
- When disconnecting the appliance from the supply, always take hold of the plug. Do not pull the cable.
- In the event of a fault pull out the mains plug or deactivate the fuse.
- Do not damage the mains power cable. Do not operate the appliance with a defective mains power cable.
- Only customer service or other specially trained staff may repair or perform other operations on the appliance.
- Only assemble, connect and dispose of the appliance according to the instructions.
- Please keep these instructions in a safe place and pass them on to any subsequent owners.

**Fire hazard:**

- The coolant used (information on the model plate) is eco-friendly but also flammable. Any leaking coolant may ignite.
  - Do not damage the refrigerant circuit pipes.
  - Do not handle ignition sources inside the appliance.
  - Do not use electrical appliances inside the appliance (e.g. steam cleaners, heaters, ice cream makers, etc.).
  - If the refrigerant leaks: remove any naked flames or ignition sources from the vicinity of the leakage point. Properly air the room. Inform customer services.
- Do not store explosives or sprays using combustible propellants such as butane, propane, pentane, etc. in the appliance. To identify these spray cans, look for the list of contents printed on the can, or a flame symbol. Gases possibly escaping may ignite due to electrical components.
- Keep burning candles, lamps and other items with naked flames away from the appliance so that they do not set the appliance on fire.
- Please be sure to store alcoholic drinks or other packaging containing alcohol in tightly closed containers. Any alcohol that leaks out may be ignited by electrical components.

**Danger of tipping and falling:**

- Do not misuse the plinth, drawers, doors etc. as a step or for support. This applies particularly to children.

**Danger of food poisoning:**

- Do not consume food which has been stored too long.

**Danger of frostbite, numbness and pain:**

- Avoid prolonged skin contact with cold surfaces or refrigerated/frozen goods or take protective measures, e.g wear use gloves.

**Danger of injury and damage:**

- Hot steam can lead to injury. Do not use electrical heating or steam cleaning equipment, open flames or defrosting sprays to defrost.
- Do not use sharp implements to remove the ice.

**Risk of crushing:**

- Do not hold the hinge when opening and closing the door. Fingers may get caught.

**Symbols on the appliance:**



The symbol can be located on the compressor. It refers to the oil in the compressor and indicates the following danger: Swallowing or inhaling can be fatal. This is only relevant for recycling. There is no danger in normal operation.



This symbol is found on the compressor and indicates the danger of flammable materials. Do not remove the sticker.



A sticker to this effect may be applied to the rear of the appliance. It refers to the foam-padded panels in the door and/or the housing. This is only relevant for recycling. Do not remove the sticker.

**Please observe the specific information in the other sections:**

| | | |
|---|---|---|
| ⚠ | DANGER | identifies a situation involving direct danger which, if not obviated, may result in death or severe bodily injury. |
| ⚠ | WARNING | identifies a dangerous situation which, if not obviated, may result in death or severe bodily injury. |
| ⚠ | CAUTION | identifies a dangerous situation which, if not obviated, may result in minor or medium bodily injury. |
| | NOTICE | identifies a dangerous situation which, if not obviated, may result in damage to property. |
| | Note | It contains useful instructions and tips. |

# 3 Putting into operation

## 3.1 Switching on appliance

Ensure that the following conditions are met:

- ❑ Appliance is set up and connected according to installation instructions.
- ❑ All adhesive strips, adhesive and protective films as well as transport safety devices in and on the appliance are removed.
- ❑ All marketing leaflets are removed from the drawers.

▶ Switch on the appliance from the display.

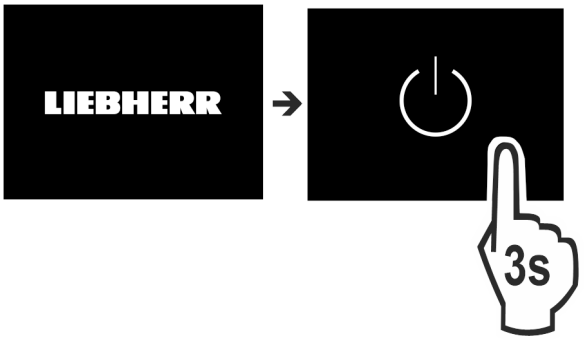


*Fig. 2*

▶ After switching on the appliance, select the language.

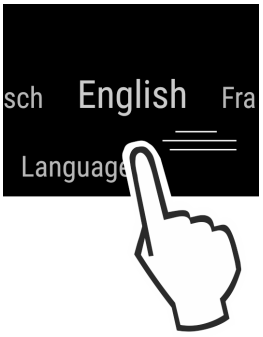


*Fig. 3*

▶ The status screen appears.

▶ If the DemoMode is displayed together with the blue screen after switching on the appliance, the DemoMode can be deactivated within the next 5 minutes.

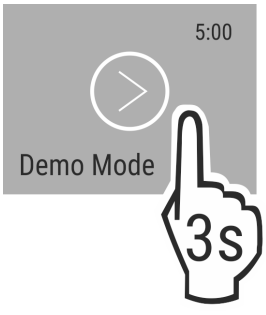


*Fig. 4*

▶ Press DemoMode for 3 seconds.

▷ DemoMode is off.

**Note**

The manufacturer recommends:

▶ Storing food: wait approx. 6 hours for the set temperature to be reached.

▶ Store **frozen produce** at -18 °C or colder.

## 3.2 Inserting the components

▶ Insert the supplied components to make the most of your appliance.

▶ Purchase and install the SmartDevice Box (see smartdevice.liebherr.com).*
▶ Install the SmartDevice app (see apps.home.liebherr.com).

**Note**
You can purchase accessories from the Liebherr household appliance store (home.liebherr.com).

# 4 Foods management

## 4.1 Storing food

**WARNING**
Risk of fire
▶ Do not use any electrical appliances in the food area of the appliance unless recommended by the manufacturer.

**Note**
The energy consumption increases and the cooling power goes down if ventilation is not sufficient.
▶ Always keep air slots clear.

When storing food, always observe the following:

❑ Air vents on the inside rear wall are unobstructed.
❑ Air vents on the fan are unobstructed.
❑ Food is in sealed packaging.
❑ Foods that easily absorb or give off smell or taste are stored in sealed containers or covered.
❑ Raw meat and fish are in clean, sealed containers to prevent them coming into contact with or dripping onto other foods.
❑ Liquids are in sealed containers.
❑ Foods are not stored too closely together, as the air needs to circulate.

**Note**
Failure to follow these guidelines can lead to food perishing.

### 4.1.1 Fridge section

The natural air circulation creates a range of temperatures.

**Arrange your food as follows:**
▶ In the top section and in the door: butter and cheese, preserves and tubes.
▶ In the coldest zone *Fig. 1 (18)*: Perishable foods such as ready-to-eat meals, meat and sausages
▶ On the bottom shelf: Raw meat and fish

### 4.1.2 EasyFresh-Safe

This compartment is great for non-packaged foods, such as fruit and vegetables.

The air moisture in the compartment depends on the moisture content of the items being stored and the number of times the door is opened. You can adjust the air moisture.

**Arrange your food as follows:**
▶ Store your loose fruit and vegetables.
▶ Excessive air moisture: Regulate the air humidity (see 7.7 Adjusting the moisture levels) .

### 4.1.3 Freezer compartment

This provides a dry, frosty storage climate at -18 °C. A frosty climate is great for storing frozen food and frozen goods for several months, making ice cubes and freezing fresh food.

**Freezing food**

You can freeze as many kilograms of fresh food within 24 hours as indicated on the nameplate (see 9.5 Model plate) under "freezing capacity ... kg/24h".

So that the food is rapidly frozen through to the core, keep to the following quantities per pack:

- Fruit, vegetables up to 1 kg
- Meat up to 2.5 kg

Before freezing goods, please make sure of the following:

❑ SuperFrost is activated (see 6.3 Functions) when the amount of food to freeze exceeds approx. 2 kg.
❑ With a small amount to freeze: SuperFrost is on for about 6 hours beforehand.
❑ With a maximum amount to freeze: SuperFrost is on for about 24 hours beforehand.

**Arrange your food as follows:**

**CAUTION**
Risk of injury from glass fragments!
Drink bottles and cans may explode if frozen. This applies particularly to carbonated drinks.
▶ Only freeze drink bottles and cans when using the *bottle timer* function.

With a small amount of frozen goods:
▶ Place packaged groceries in the top drawer.
▶ If possible, place groceries at the back of the drawer near the rear wall.
With a maximum amount of frozen goods:
▶ Distribute packaged groceries across all drawers, but do not place any groceries in the bottom drawer.
▶ If possible, place groceries at the back of the drawer near the rear wall.
With a maximum amount of frozen goods:
▶ Once SuperFrost turns off automatically, place the food in the drawer compartment.

**Defrost the food**

- In the fridge
- In the microwave
- In the stove/oven
- At room temperature

**WARNING**
Risk of food poisoning!
▶ Do not re-freeze thawed food.

▶ Only take out the food you need at the time.
▶ Cook defrosted food as soon as possible.

## 4.2 Storage times

Refer to the specified storage times as a guide.

In the case of foods with a minimum shelf life, the date indicated on the packaging still applies.

### 4.2.1 Fridge section

Always follow the best-before date stated on the packaging.

### 4.2.2 Freezer compartment

| Recommended storage period for various types of food | | |
|---|---|---|
| Ice cream | at -18 °C | 2 to 6 months |
| Sausages, ham | at -18 °C | 2 to 3 months |

| Recommended storage period for various types of food | | |
|---|---|---|
| Bread, baked goods | at -18 °C | 2 to 6 months |
| Game, pork | at -18 °C | 6 to 9 months |
| Fatty fish | at -18 °C | 2 to 6 months |
| Lean fish | at -18 °C | 6 to 8 months |
| Cheese | at -18 °C | 2 to 6 months |
| Poultry, beef | at -18 °C | 6 to 12 months |
| Vegetables, fruit | at -18 °C | 6 to 12 months |

# 5 Saving energy

- Pay attention to good ventilation. Do not cover ventilation holes or grids.
- Always keep the fan air slits clear.
- Do not install the appliance in direct sunlight, next to an oven, radiator or similar.
- Energy consumption depends on the installation conditions, e.g. the ambient temperature (see 1.3 Appliance range of use) . A warmer ambient temperature can increase the energy consumption.
- Open the appliance for as short a time as possible.
- The lower the temperature is set the higher the energy consumption.
- Sort your food: home.liebherr.com/food.
- Keep all food properly packed and covered. This prevents frost from forming.
- Only take food out for as long as necessary so that it doesn't warm up too much.
- Inserting warm food: allow to cool down to room temperature first.
- Thaw frozen food in the refrigerator.
- For longer periods of absence, use HolidayMode (see HolidayMode) .

# 6 Controls

## 6.1 Controls and displays

The display provides a quick overview of the temperature setting and the status of functions and settings. You can control the functions and settings either by deactivating/activating them or by selecting a value.

### 6.1.1 Status display

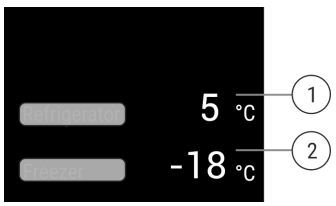


*Fig. 5*

**(1)** Temperature display of the fridge section

**(2)** Freezer compartment temperature display

The Status display shows the set temperatures and is the home display. From there, you can navigate to the options and settings.

### 6.1.2 Navigation

Navigate in the menu to access the individual functions. An audible signal sounds after confirming a function or setting. If no selection is made after 10 seconds the display switches to the Status display.

The appliance is operated by swiping and confirming in the display:

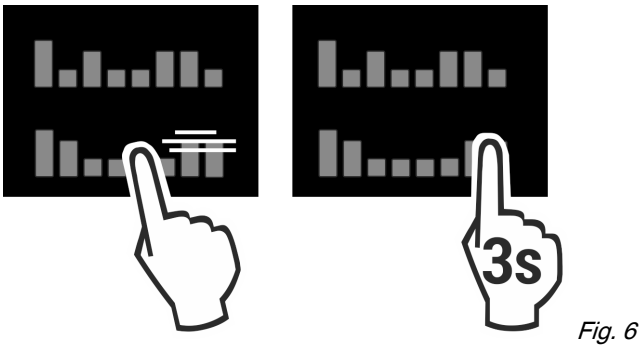


*Fig. 6*

**Back:**

- Confirm your selection in the submenu. The display returns to the menu.
-  . The display returns to the function/setting.

**Back to Status display:**

- Close and open the door.
- Wait 10 seconds. The display switches to the Status display.

### 6.1.3 Display symbols

Display symbols provide information on the current appliance status:

| Symbol | Appliance status |
|---|---|
|  | **Standby**<br>The appliance or temperature zone is switched off. |
|  | **Flashing number**<br>Appliance is working. Temperature flashes until the set temperature is reached. |
|  | **Flashing symbol**<br>Appliance is working. Setting is made. |

## 6.2 Control concept

### 6.2.1 Activating/deactivating the function

You can activate/deactivate the following functions:

| Symbol | Function |
|---|---|
|  | SuperCool[x] |
|  | PowerCool[x] |
|  | SuperFrost[x] |
|  | IceMaker and MaxIce[x*] |

| Symbol | Function |
|---|---|
|  | PartyMode[x] |
|  | HolidayMode |
|  | EnergySaver |

[x] When a function is on, the appliance works harder. This means the appliance could make louder noises and consume more energy.

▶ Swipe left in the display until the function appears.
▶ Confirm selected function with a short tap.
▷ You hear the confirmation tone.
▷ Status appears in the menu.
▷ Function is on/off.

### 6.2.2 Selecting function value

With the following functions you can set a value in the submenu:

| Symbol | Function |
|---|---|
|  | **Cool:**<br>Setting the temperature<br>Turn on/off the temperature zone |
|  | **Freeze:**<br>Setting the temperature<br>Switch the appliance on/off |

▶ Swipe left in the display until the function appears.
▶ Confirm selected function with a short tap.
▶ Select the setting value by swiping the display.

**Setting the temperature**

▶ Confirm with a short tap.
▷ You hear the confirmation tone.
▷ The display changes to blue when it is activated.
▷ Display switches back to the menu.

**Switching the temperature zone on/off**

▶ To Confirm, press for 3 seconds.
▷ You hear the confirmation tone.
▷ Display returns to the Status screen.

### 6.2.3 Activating/deactivating settings

You can activate/deactivate the following settings:

| Symbol | Setting |
|---|---|
|  | WiFi[1] |
|  | Entry lock[2] |
|  | SabbathMode[2] |
|  | Reminders[1] |
|  | Reset[2] |
|  | Off [2] |

▶ Swipe left in the display until Settings appears.
▶ Tap to confirm settings.
▶ Swipe until you see the setting you want.

[1] **Activate setting (shortpress)**

▶ Tap briefly to confirm.
▷ You hear the confirmation tone.
▷ Status appears in the menu.
▷ Setting is on / off.

[2] **Activate setting (longpress)**

▶ Press the selection for 3 seconds to confirm.
▷ You hear the confirmation tone.
▷ Status appears in the menu.
▷ Display changes.

### 6.2.4 Go to the Customer menu

You can see the following settings in the Customer menu:

| Symbol | Function |
|---|---|
|  * | TubeClean*[2*] |
|  * | Ice cubes[1]* |
|  | Software |

▶ Swipe left in the display until the settings appear.
▶ Tap settings.
▷ The submenu appears.
▶ Swipe left in the display until the appliance information appears.
▶ Press for 3 seconds.
▷ The input menu for a numerical code appears.
▶ Enter the numerical code 151.
▷ The customer menu appears.
▶ Swipe left in the display until the desired setting appears.

[1] **Select the value**

▶ Confirm with a short tap.
▷ You hear the confirmation tone.
▷ Status appears briefly in the display.
▷ Display switches back to the menu.

[2] **Activate the setting**

▶ To confirm, press the display for 3 seconds.
▷ You hear the confirmation tone.
▷ Status appears on the display.
▷ The symbol flashes as long as the appliance is working.

## 6.3 Functions

### Temperature

The temperature depends on the following factors:

- The amount of times the door is opened
- How long the door is open for
- The room temperature of the installation site
- The type, temperature and amount of food



*** Depending on model and options**

| Temperature zone | Recommended setting |
|---|---|
| 5 ℃ Fridge section | 5 °C |
| -18 ℃ Freezer compartment | -18 °C |

**Setting the temperature**

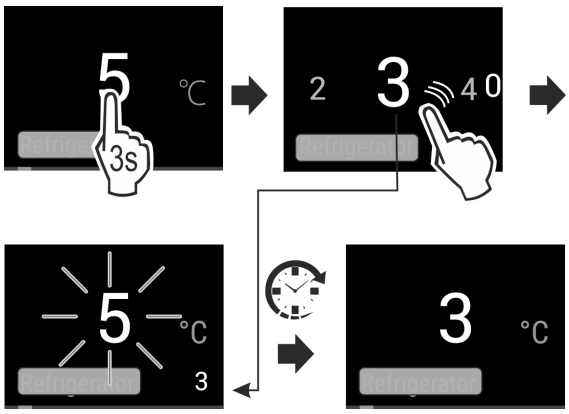


*Fig. 7*

▶ Set the value. (see 6.2 Control concept) .
▷ Set temperature is shown at the bottom right of the display.

**Switching off a temperature zone**

You can switch the fridge compartment off separately.

Switching off the freezer section turns off all the temperature zones.

▶ Deactivate IceMaker. *
▶ Set the value. (see 6.2 Control concept) .
▷ ⏻ appears.

## SuperCool

This function selects the lowest cooling temperature. This gives you colder storage temperatures.

This function is relevant to the fridge section *Fig. 1 (A)*

Use:

- Cool large amounts of food quickly.

**Activating/deactivating the function**

▶ Using the fridge section: activate the function when you add the goods.
▶ Activating/deactivating (see 6.2 Control concept) .
**-or-**
▶ Activating/deactivating in the Liebherr SmartDevice-App.*

The function automatically turns off. The appliance goes back to normal mode. The temperature adjusts itself to the set level.

## SuperFrost

This function selects the lowest freezing temperature. This gives you colder storage temperatures.

This function refers to the freezer section *Fig. 1 (B)*.

Use:

- For storing more than 2 kg fresh food every day.
- Freezing fresh food quickly to the core.
- Increasing the cold reserves in the stored goods before defrosting the appliance.

**Activating/deactivating the function**

With a small amount to freeze:
▶ Activate 6 hours before use.
With a maximum amount to freeze:
▶ Activate 24 hours before use.
▶ Activating/deactivating (see 6.2 Control concept) .
**-or-**
▶ Activating/deactivating in the Liebherr SmartDevice app.*

The function automatically turns off. The appliance goes back to normal mode. The temperature adjusts itself to the set level.

## PowerCool

This function provides the perfect blanket temperature to cool your food.

This function refers to the fridge section *Fig. 1 (A)*.

Use:

- At higher room temperatures (from approx. 35 °C )
- When humidity is high e.g. on summer days
- When storing moist goods, to avoid condensation building up inside

**Activating/deactivating the function**

▶ Activating/deactivating (see 6.2 Control concept) .

**Note**
The fan can run even when function is deactivated. This ensures optimal temperature distribution in the appliance.

▷ Function activated: Energy consumption of the appliance is slightly increased.

## PartyMode

This option offers an assortment of special functions and settings that are useful if you are having a party.

The following functions are on:

- *SuperCool*
- *SuperFrost*
- *IceMaker* and *MaxIce**

All the functions can be adjusted flexibly and separately. Changes are discarded when the function turns off.

**Activating/deactivating the function**

▶ Activating/deactivating (see 6.2 Control concept) .
▷ On: All functions are activated at the same time.
▷ Deactivated: Previously set temperatures are restored.

After 24 hours the function turns off automatically.

## HolidayMode

This function minimises the energy consumption during an extended absence. The temperature of the refrigerator compartment is set to 15 °C and this is displayed on the status screen when the temperature has been reached.

The set freezer temperature remains unchanged.

This function refers to the fridge section *Fig. 1 (A)*.

Use:

- Save energy if you plan to be away for a while.
- Avoid coming home to bad smells and mould.

**Activating/deactivating the function**

▶ Empty everything from the fridge section.
▶ Activating/deactivating (see 6.2 Control concept) .

▷ On: Fridge temperature is raised.
▷ Off: the previously set temperature is restored.

## EnergySaver

This function reduces energy consumption. If you activate this function, the cooling temperature increases.

| Temperature zone | Recommended setting | Temperature when EnergySaver activated |
|---|---|---|
| 5 ℃ Fridge compartment | 5 °C | 7 °C |
| -18 ℃ Freezer compartment | -18 °C | -16 °C |

Use:

- Save energy.

**Activating/deactivating the function**

▶ Activating/deactivating (see 6.2 Control concept) .
▷ Activated: Higher temperatures are set in all temperature zones.
▷ Deactivated: Previously set temperatures are restored.

## IceMaker / MaxIce*

This function creates ice cubes.*

This function refers to the freezer compartment *Fig. 1 (B)*.*

Use:*

- If this function is activated, you can decide between the normal IceMaker function and MaxIce.
- The MaxIce function enables your appliance to make approx. 1.5 kg of ice cubes per 24 h within a short time.

The ice cube size can be set with the **ice cube size** function. (see Ice cubes*) *

The lines can be cleaned with the **TubeClean** function. (see TubeClean*) *

**Activating the function***

Ensure that the following conditions are met:

❑ IceMaker is put into operation. (see 7.9 IceMaker*)
❑ Water tank is filled. (see 7.9.1 Fill the water tank*) *

▶ Activate the function. (see 6.2 Control concept)
**-or-**
▶ Activate the function via the Liebherr SmartDevice-App.

▷ It can take up to 24 hours for the first ice cubes to be made.

**Deactivating the function***

Ensure that the following conditions are met:

- Water tank is empty. (see 7.9 IceMaker*) *

▶ Deactivate the function. (see 6.2 Control concept)
**-or-**
▶ Deactivate the function via the Liebherr SmartDevice-App.*

▷ If ice cubes are currently being made, the system completes the process. After that, the IceMaker switches off.

# 6.4 Settings

## Language

This setting lets you choose the language of the display.

Choose from the following languages:

- German
- English
- French
- Spanish
- Italian
- Dutch
- Czech
- Polish
- Portuguese
- Russian
- Chinese

**Activating/deactivating settings**

▶ Activating/deactivating (see 6.2 Control concept) .

## Connecting to the WLAN

This setting connects the appliance to the internet. The connection is managed in the SmartDevice-Box. You can use the SmartDevice-App to add your appliance to a SmartHome-System. Use the SmartDevice-App or other compatible partner networks to enjoy advanced options and settings.

**Note**
The SmartDevice-Box is available from the Liebherr Domestic Appliances Shop (https://home.liebherr.com/shop/de/deu/smartdevicebox.html).

You can find more information about the availability, prerequisites and the individual options on the Internet under https://smartdevice.liebherr.com/install.

Use:

- Manage the appliance with the SmartDevice-App or a compatible partner network.
- Enjoy advanced functions and settings.
- Check the current status of the appliance in the SmartDevice-App.

❑ The SmartDevice Box is purchased and installed (see https://smartdevice.liebherr.com/install).*
❑ The SmartDevice app is installed (see https://apps.home.liebherr.com/).

**Setting up the connection**

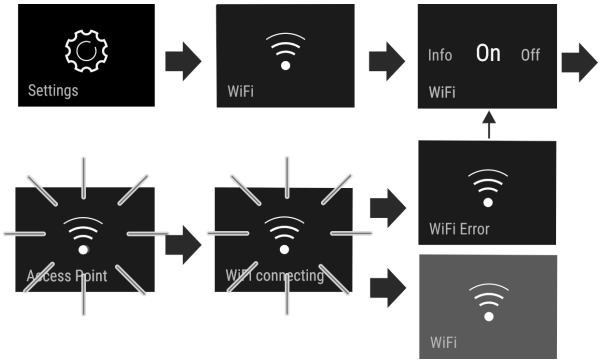


*Fig. 8*

▶ Activating the setting (see 6.2 Control concept) .
▷ The connection is set up: Connecting appears. The symbol flashes.

▷ The connection is set up: WiFi appears, the display turns blue.
▷ The connection failed: WiFi Error appears.

**Disconnecting the appliance**

▶ Deactivate the setting (see 6.2 Control concept) .




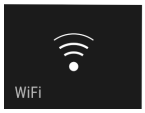


*Fig. 9*

▷ There is no connection: The symbol  is displayed constantly.

**Restoring the connection**

▶ Restore settings (see 6.2 Control concept) .

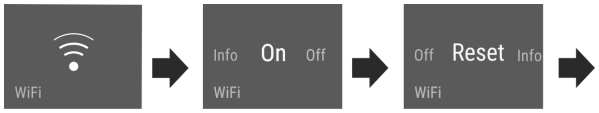


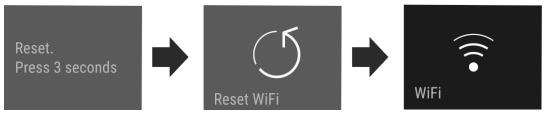


*Fig. 10*

▷ Connection and other settings are restored to factory settings.

## Entry lock

This setting prevents unintentional use of the appliance, e.g. by children.

Use:

- Avoid settings being changed unintentionally.
- Avoid the appliance being switched off unintentionally.
- Avoid the temperature being changed unintentionally.

**Activating/deactivating settings**

▶ Activating/deactivating. (see 6.2 Control concept)




## Display brightness

Set the brightness level of the display.

You can set the following brightness levels:

- 40%
- 60%
- 80%
- 100%

**Choose the setting**

▶ Set the level (see 6.2 Control concept) .

## Door alarm

Set the time before the door alarm (see Close door) sounds.

The options are as follows:

- 1 min
- 2 min
- 3 min
- Off

**Choose the setting**

▶ Set the time (see 6.5 Warnings) .

## Temperature unit

This setting enables you to switch between Celsius and Fahrenheit as the temperature unit.

**Selecting the setting value**

▶ Set the value (see 6.2 Control concept) .

## Info

This setting allows the appliance information to be read out as well as access to the customer menu.

It provides the following information:

- Model name
- Index
- Serial number
- Service number

**Show appliance data**

▶ Swipe in the display until Settings appears.
▶ Confirm the display.
▶ Swipe in the display until About appears.
▶ Read the appliance info.

## SabbathMode

This setting meets the religious requirements on the Sabbath and Jewish festivals. Turn on SabbathMode to switch off certain controls. This means you can use the appliance without anyone changing the settings.

You can find a list of Star-K-certified appliances at www.star-k.org/appliances.

**WARNING**
Danger of food poisoning.
If there is a power cut while the appliance is in SabbathMode, this message is not saved. Once power is restored, the appliance continues in SabbathMode. When this mode is over no message about the power cut is displayed on the temperature display.
If there was a power cut during SabbathMode:
▶ Check the food for quality. Do not eat the food if it has thawed.

What happens on the appliance when in SabbathMode:

- The Status display permanently shows SabbathMode.
- The display is locked for all functions apart from turning off SabbathMode.
- Any functions/settings that are already on, remain active.
- The display stays bright when the door is closed.

- Reminders are disabled. The set time intervals are also paused. This function is disabled in SabbathMode.
- Reminders and warnings are not displayed. There are no acoustic signals, and the display does not show warnings or settings such as temperature alarm or door alarm.
- The IceMaker is out of use.*
- The internal light is off.
- The defrost cycle only works for the specified time without taking account of fridge use.
- After a power cut the appliance automatically returns to SabbathMode.

**Activating/deactivating SabbathMode**

▶ To activate this function, swipe the display until you see Settings in the menu and press for 1 second. The menu changes to show the available settings.
▶ Swipe the display until you see the SabbathMode (Menora) symbol. Press the symbol for 3 seconds.
▷ The display changes colour.
▷ SabbathMode is activated.

To deactivate the function, press the display for 3 seconds.

SabbathMode is deactivated.

### TubeClean*

This setting cleans the IceMaker pipes.*

Ensure that the following conditions are met:*

❑ IceMaker cleaning is ready (see 8.3.6 Cleaning the IceMaker*) .

**Activating the setting***

▶ Activate the setting in the Customer menu (see 6.2 Control concept) .
▷ The rinse process is ready (max. 60 min.): Symbol flashes.
▷ Water pipes are rinsed: Symbol flashes.
▷ Rinsing process is complete: Function turns off automatically.

### Ice cubes*

Set the ice cube size.*

**Choose the setting***

▶ Set the size in the Customer menu (see 6.2 Control concept) .

### Reminder

Reminders are given out acoustically by a beep and visually by a symbol in the display. The signal gets louder until the alert stops.

**Inserting the water tank***

This message appears if there is not enough water in the water tank.
▶ Fill the water tank.
▷ The IceMaker produces ice cubes.
▶ If the water tank is full but you still see this message: check if the float is stuck.
▶ If necessary, drain the water and release the float with a thin object such as a cotton bud.
▶ If the water tank is full but you still see this message: please contact Customer Services (see 9.4 Customer Services) .

**Replace FreshAir active carbon filter**

This message appears when the air filter needs replacing.
▶ Change the air filter every six months.
▶ Confirm the message with OK.
▷ The service interval resets.
▷ The air filter guarantees the air quality in the fridge.

**Insert IceMaker drawer***

This message appears if the IceMaker drawer is open.
▶ Push the IceMaker drawer in.
▷ The message disappears.
▷ The IceMaker produces ice cubes.

**Activating the setting**

▶ Activating/deactivating (see 6.2 Control concept) .

### Turn off appliance

This setting turns off the whole appliance.

**Switching off the entire appliance**

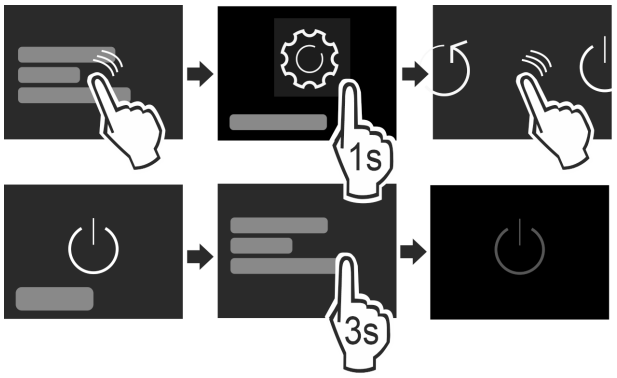


*Fig. 11*

▶ Turning off the IceMaker .*
▶ Activating/deactivating (see 6.2 Control concept) .
▷ Off: Display goes black.

## 6.5 Warnings

Warnings are issued with an acoustic signal and visually with a symbol on the display. The signal gets louder until the alert stops.

### 6.5.1 Message

**Close door**

This message appears if the door is open for too long.

You can set how long it takes for this message to appear .
▶ Stop alarm: Confirm the message.
**-or-**
▶ Close the door.

**Power cut**

This message appears if the freezer temperature increased due to a power cut. After the power is restored, the appliance continues to work at the set temperature.
▶ Stop alarm: Confirm the message.
▷ Temperature alert appears (see Temperature alarm) .

**Temperature alarm**

This message appears if the freezer temperature does not match the set temperature.

Variations in temperature could be because:

- Hot, fresh food was inserted.
- Too much warm room air flowed in when rearranging and removing food.
- The power was cut off for a while.
- The appliance is faulty.

When the fault is eliminated the appliance continues to work at the set temperature.

▶ Confirm the display.
▷ The highest temperature is shown.
▶ Confirm display again.
▷ The status display is displayed.
▷ The current temperature is shown.

**Error**

This message appears if there is a fault with the appliance. An appliance component indicates a fault.

▶ Open the door.
▶ Note down the fault code.
▶ Confirm the message.
▷ The audible signal stops.
▷ The display switches to the Status screen.
▶ Close the door.
▶ Contact Customer Services (see 9.4 Customer Services) .

### 6.5.2 DemoMode

If “D” appears on the display, demo mode is on. This option is designed for retailers, as it turns off all the cooling functions.

**Stopping DemoMode**

If you see the following running in the display:

▶ Confirm the display within the countdown.
▷ DemoMode is off.

If the timer is not running:

▶ Unplug the appliance.
▶ Plug the appliance in again.
▷ DemoMode is off.

# 7 Features

## 7.1 Door rack

### 7.1.1 Move/remove the door rack

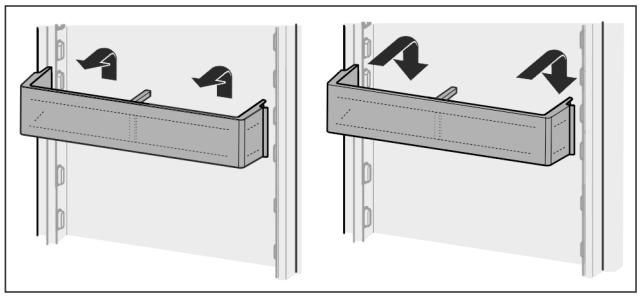

*Fig. 12*

▶ Slide the rack upwards.
▶ Pull forwards.
▶ Re-insert it in reverse order.

### 7.1.2 Disassembling the door rack

The door rack can be taken apart for cleaning.

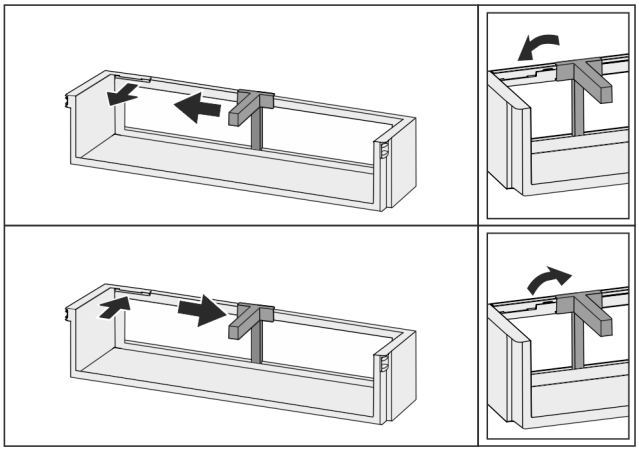

*Fig. 13*

▶ Disassemble the door rack.

## 7.2 Shelves

### 7.2.1 Adjusting/removing the shelves

The shelves are prevented from being pulled out accidentally by pull out stops.

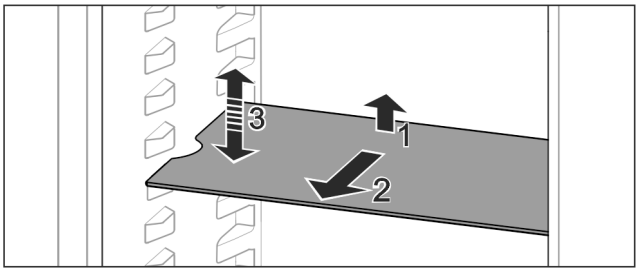


*Fig. 14*

▶ Lift the shelf and pull forward.
▷ Line up the side runner.
▶ Adjust the height of the shelf: Lift or lower it to the desired height and slide it in.

**-or-**

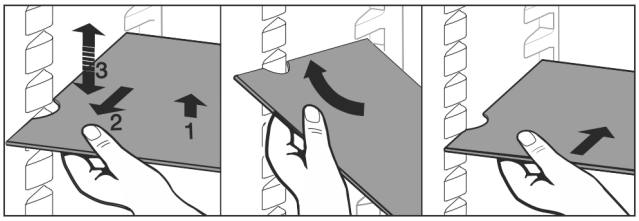


*Fig. 15*

▶ Remove the shelf completely: Pull it out to the front.

▶ Easier removal: Set the shelf at an angle.
▶ Insert the shelf again: Slide it in all the way.
▷ The pull-out stoppers point downwards.
▷ The pull-out stoppers are behind the front support.

You can also remove the shelf above the EasyFresh compartments.

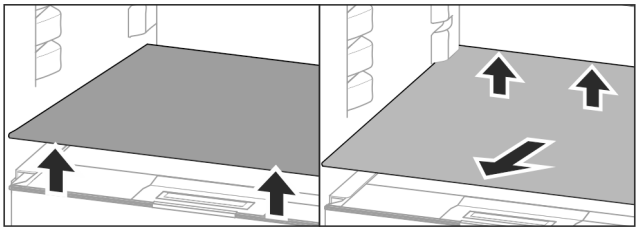

*Fig. 16*

Removing the shelf:

If the IceMaker (see 7.9 IceMaker*) has been removed:*
▶ Lift the shelf at the front and back.*
▶ Lift the shelf at the front and back.*
▶ Pull it out towards you.

Do not store any goods on the compartment cover below!

Inserting the shelf:
▶ Place the shelf at an angle, sloping down towards the back.
▷ The pull-out stoppers point downwards.
▶ Slide the shelf into place.

### 7.2.2 Dismantling the shelves

The shelves can be dismantled for cleaning.

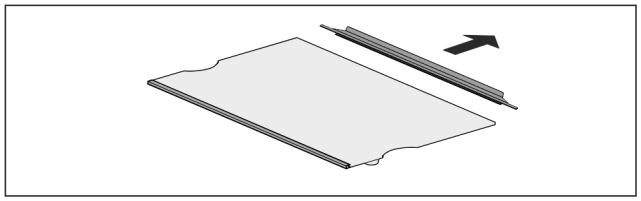

*Fig. 17*

▶ Dismantling the shelf.

## 7.3 Dividing shelf

### 7.3.1 Using the dividing shelf

The shelves are prevented from being pulled out accidentally by pull out stops.

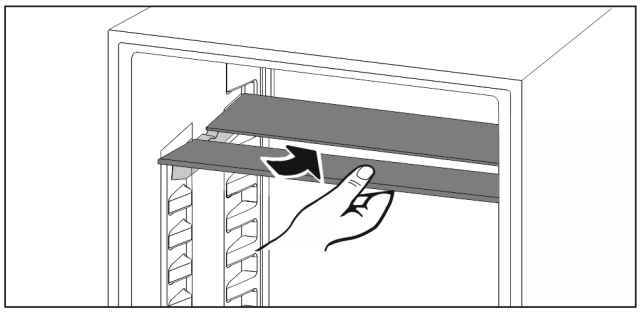

*Fig. 18*

▶ Push the dividing shelf underneath as shown.

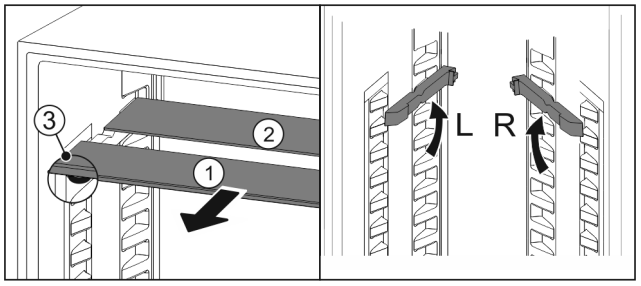


*Fig. 19*

**Adjusting the height:**
▶ Pull the glass panels out *Fig. 19 (1)* from the front, one at a time.
▶ Release the support rails and click in at the height you want.
▶ Slide in the glass panels one at a time.
▷ Flat pull-out stoppers at the front, right behind the support rails.
▷ High pull-out stoppers at the back.

**Using both shelves:**
▶ Hold the glass panel with one hand and pull it to the front.
▷ The glass panel *Fig. 19 (1)* and trim strip are at the front.
▷ The stops *Fig. 19 (3)* point down.

## 7.4 VarioSafe*

The VarioSafe provides space for compact foodstuffs and packages, pots and glasses.

### 7.4.1 Using the VarioSafe

You can remove the drawer and slide it back in at 2 different heights. This is handy for storing taller items in the drawer.

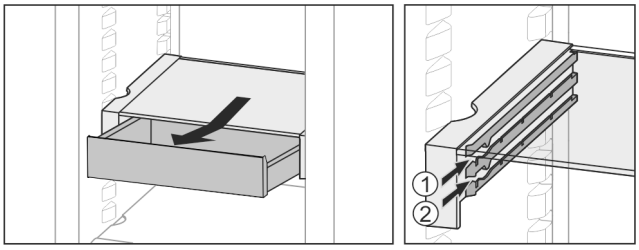


*Fig. 20*

▶ Remove the drawer.
▶ Slide back at the height you want *Fig. 20 (1)* or *Fig. 20 (2)*.

### 7.4.2 Repositioning the VarioSafe

You can shift the height of the entire VarioSafe.

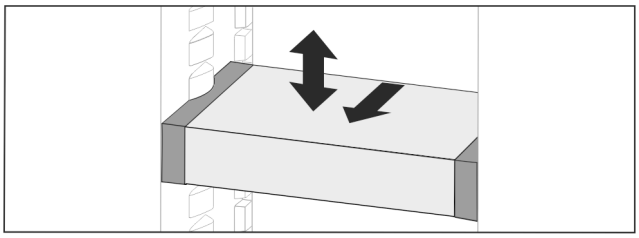

*Fig. 21*

▶ Pull forwards.
▷ Line up the side runner.
▶ Lift or lower to the height you want.
▶ Slide to the rear.

### 7.4.3 Removing the entire VarioSafe

You can remove VarioSafe as a whole unit.
▶ Pull forwards.
▷ Line up the side runner.

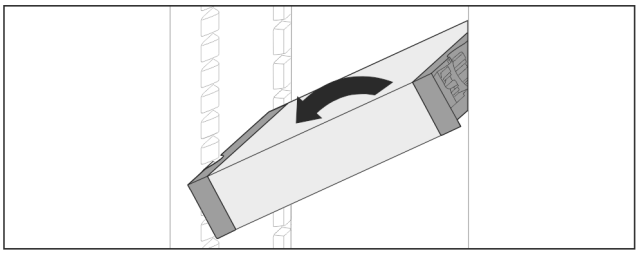

*Fig. 22*

▶ Tip to the side and pull towards you.

### 7.4.4 Disassembling the VarioSafe

You can take the VarioSafe apart for cleaning.

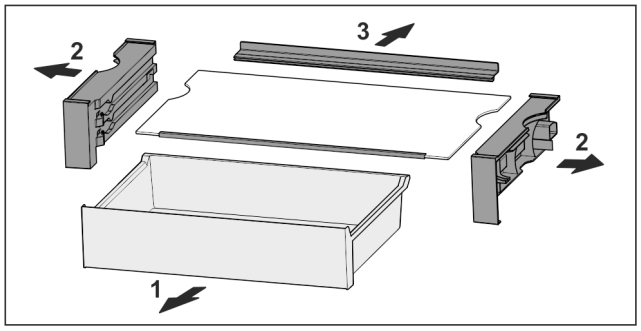


*Fig. 23*

▶ Disassembling the VarioSafe

## 7.5 Drawers

Drawers can be removed for cleaning.

The shelves below can be used for storage until the drawers are replaced.

The way to remove/insert the drawers varies depending on the pull-out system. Your appliance can include various pull-out systems.

**Note**

The energy consumption increases and the cooling power goes down if ventilation is not sufficient.

▶ Leave the bottom drawer in the appliance!

▶ Always leave the fan air vents clear on the back wall!

### 7.5.1 Removing the drawer

**Drawer on rails**

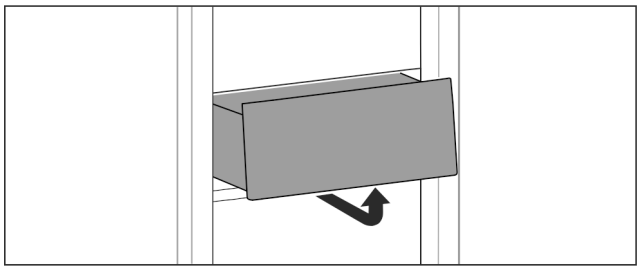

*Fig. 24*

▶ Remove the drawer as shown in the illustration.

### 7.5.2 Inserting the drawer

**Drawer on rails**

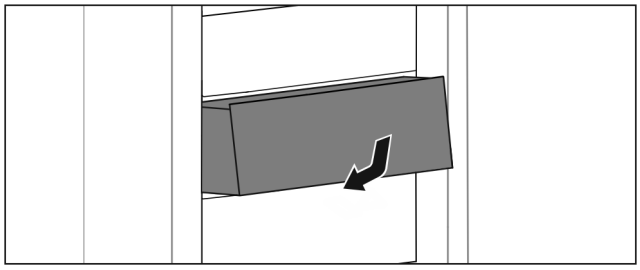

*Fig. 25*

▶ Insert the drawer as shown.

## 7.6 EasyFresh-Safe cover

You can remove the compartment cover for cleaning.

### 7.6.1 Removing the compartment cover

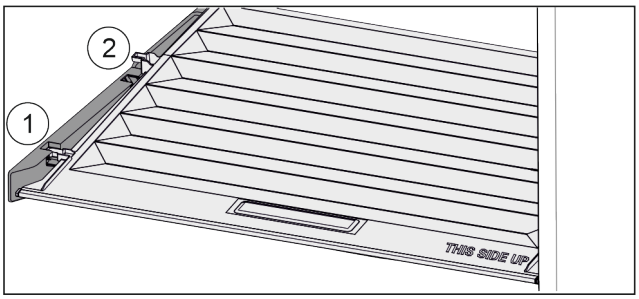


*Fig. 26*

When the drawers are removed:

▶ Pull the lid up at the front to the opening in the retaining parts *Fig. 26 (1)*.

▶ Lift from the back and pull it up and out *Fig. 26 (2)*.

### 7.6.2 Inserting the compartment cover

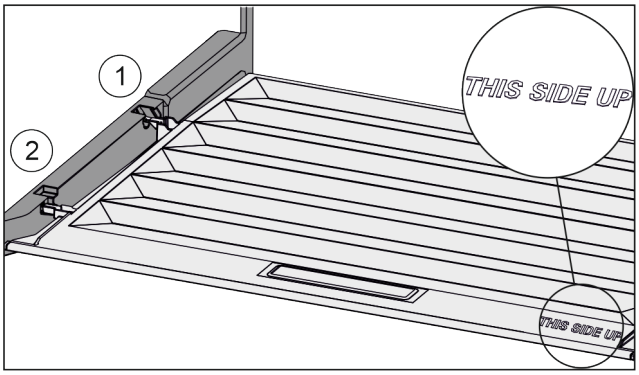


*Fig. 27*

If the text THIS SIDE UP points upwards:

▶ Insert the lip of the cover over the opening of the rear bracket *Fig. 27 (1)* and click into place *Fig. 27 (2)*.

▶ Position the cover where you want it (see 7.7 Adjusting the moisture levels) .

## 7.7 Adjusting the moisture levels

You can adjust the moisture in the drawer yourself by adjusting the compartment cover.

The compartment lid is attached to the drawer and can be hidden by a shelf or additional drawers.

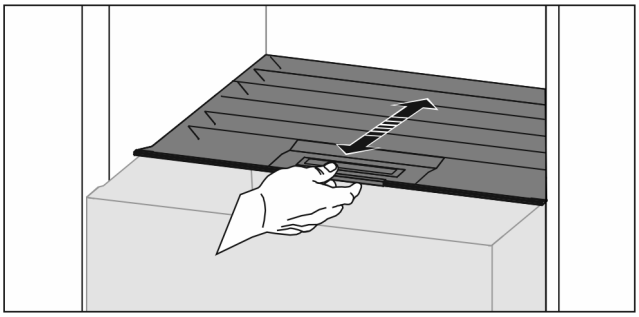

*Fig. 28*

**Low air humidity**

▶ Open the drawer.

▶ Slide the compartment cover forwards.

▷ With the drawer closed: Gap between the cover and the compartment.

▷ The air moisture in the Safe decreases.

**High air moisture**

▶ Open the drawer.

▶ Slide the cover back.

▷ With the drawer closed: The cover seals the compartment.

▷ The air moisture in the Safe increases.
If there is too much moisture in the compartment:
▶ Choose the setting “low air moisture”.
**-or-**
▶ Remove any excess moisture with a cloth.

## 7.8 EasyTwist-Ice*

The EasyTwist-Ice produces ice cubes when the water tank is inserted.

The EasyTwist-Ice is solely intended for the production of ice cubes for in standard household amounts.

**Note**
Do not change the position of the EasyTwist-Ice.

Ensure that the following conditions are met:

- The EasyTwist-Ice has been cleaned (see 8.3.5 Cleaning the EasyTwist-Ice*)
- The water tank has been cleaned.
- The EasyTwist-Ice drawer is fully inserted.

### 7.8.1 Filling the water tank

**WARNING**
Impure water!
Poisoning.
▶ Only fill with potable water.

**NOTICE**
Sugar-content liquids!
Damage to EasyTwist-Ice.
▶ Only fill with cold drinking water.

**Note**
Using filtered, decarbonised water ensures the best-tasting drinking water for your ice cubes.
This water quality can be achieved using a table water filter of the kind available in trade retail outlets.
▶ Always fill the water tank only with filtered, decarbonised drinking water.

The EasyTwist-Ice is supplied with water from the water tank.

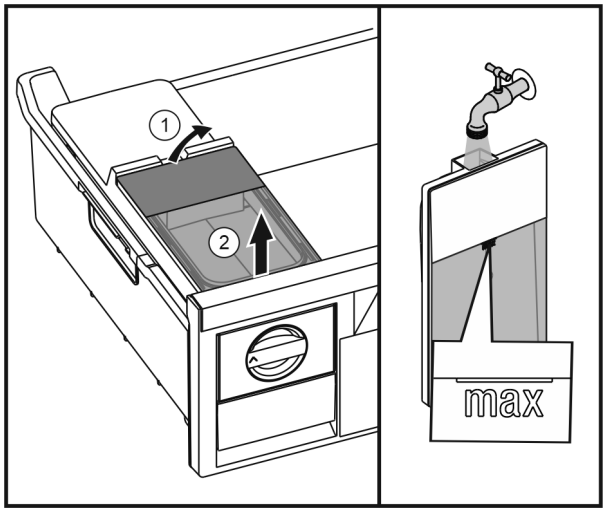


*Fig. 29*

▶ Lift up the water tank at the rear *Fig. 29 (1)* and remove to the top *Fig. 29 (2)*.
▶ Fill with drinking water up to the marking.
▶ Insert the water tank by reversing the steps described above.

### 7.8.2 Producing ice cubes

The production volume depends on the freezer temperature. The colder the temperature, the more ice cubes that can be produced in a certain period.

Maximum capacity of the ice cube drawer – 40 cubes (2x ice cube production).

Time required for ice cube production – at least 5 hours.

**Releasing the ice cubes**
▶ Turn the knob to the right up to its stop limit.
▶ If necessary, repeat this step several times and turn the knob a little more.

## 7.9 IceMaker*

The IceMaker produces ice cubes with the water tank in the fridge section. The water tank can also be used to provide cooled drinking water.*

The IceMaker will produce ice cubes for household use only.

Ensure that the following conditions are met:

- IceMaker is cleaned (see 8 Maintenance) .
- The water tank is clean (see 8 Maintenance) .*
- IceMaker drawer is fully inserted.

### 7.9.1 Fill the water tank*

**WARNING**
Unclean water!
Contaminants.
▶ Only fill the water tank with potable water.
▶ If you are not using the IceMaker: Empty the water tank. (see 8.3.6 Cleaning the IceMaker*)

**NOTICE**
Sugar-content liquids!
Damage to IceMaker.
▶ Only fill with cold drinking water.

**Note**
Using filtered, decarbonised water ensures the best-tasting drinking water for your ice cubes.
This water quality can be achieved using a table water filter of the kind available in trade retail outlets.
▶ Always fill the water tank only with filtered, decarbonised drinking water.

The IceMaker is supplied with water from the water tank (see 1 Appliance at a glance) .

If the water tank is empty, the following reminder appears on the display Water Refill (see 6.5 Warnings) .

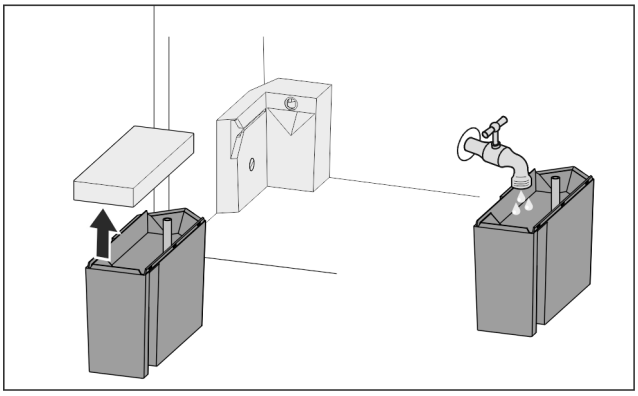

*Fig. 30*

▶ Pull the water tank towards you and out.
▶ Remove the lid.
▶ Fill with drinking water.
▶ Put the lid on.
▶ Insert the water tank into the brackets and slide in all the way.

### 7.9.2 Producing ice cubes

The volume depends on the freezing temperature. The colder the temperature, the more ice cubes the system can produce in a certain time period.

After the IceMaker is turned on for the first time, it can take up to 24 hours for the first ice cubes to be made.

▶ Activate the IceMaker function (see 6.2 Control concept) .
▶ To make a high number of ice cubes: Activate the MaxIce function (see 6.2 Control concept) .
▶ To make a high number of ice cubes: Move the divider in the IceMaker drawer or remove it completely.
▶ Distribute the ice cubes evenly in the drawer to increase the capacity.
▶ Closing the drawer: IceMaker starts making ice cubes again automatically.

**Note**
When a certain level is reached in the IceMaker drawer, it stops producing ice cubes. The IceMaker does not fill the drawer all the way to the top.

## 7.10 VarioSpace

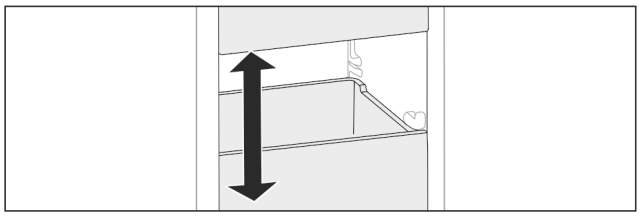

*Fig. 31*

You can remove drawers and glass panels from your appliance. This provides more room for large food items such as poultry, joints of meat, large game, and tall baked products. You can then freeze these items whole for later preparation.

▶ Note the weight limits on the drawers and glass panels (see 9.1 Technical specifications) .

## 7.11 Accessories

### 7.11.1 Bottle holder

**Using the bottle holder**

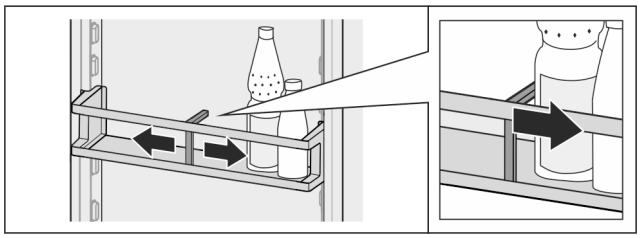

*Fig. 32*

▶ Push the bottle holder onto the bottles.
▷ The bottles are prevented from falling over.

**Removing the bottle holder**

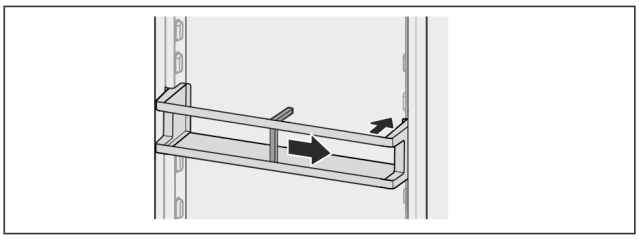

*Fig. 33*

▶ Move the bottle holder all the way to the right.
▶ Push the bottle holder to the back to remove.

### 7.11.2 Flexible ice compartment divider

**Using the flexible ice compartment divider**

Appliances with an IceMaker have a large ice cube tray with a movable divider so that food can be kept on the other side if required.

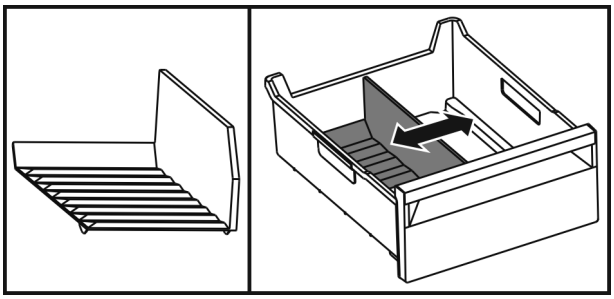

*Fig. 34*

▶ Move the divider.

**Removing the flexible ice compartment divider**

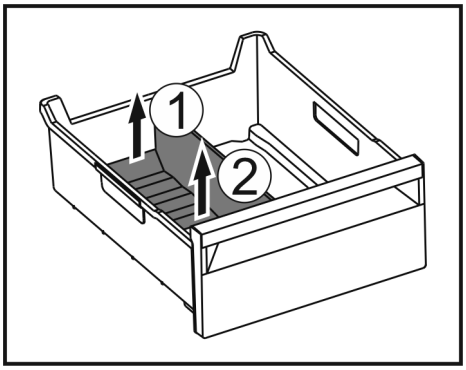


▶ Lift the back of the divider *Fig. 34 (1)*.
▶ Lift it up and out *Fig. 34 (2)*.

**Putting in the flexible ice compartment divider**

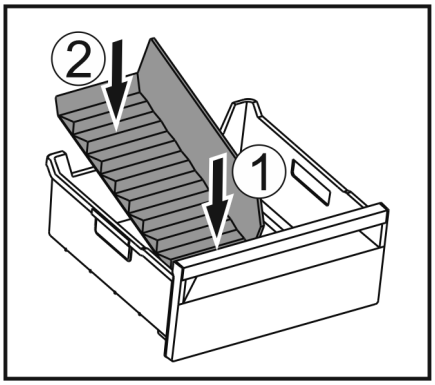


*Fig. 35*

▶ Put in the divider at the front first *Fig. 35 (1)*.
▶ Lower the rear part *Fig. 35 (2)*.

# 8 Maintenance

## 8.1 FreshAir carbon filter

The FreshAir carbon filter is in the compartment above the fan.

It guarantees the best air quality.

❑ Replace the carbon filter every 6 months.
With the *Reminder* setting on, a message on the display prompts you to replace it.
❑ The carbon filter can be disposed of with the regular household waste.

**Note**
You can purchase the FreshAir carbon filter from the Liebherr household appliance store (home.liebherr.com).

### 8.1.1 Removing the FreshAir carbon filter

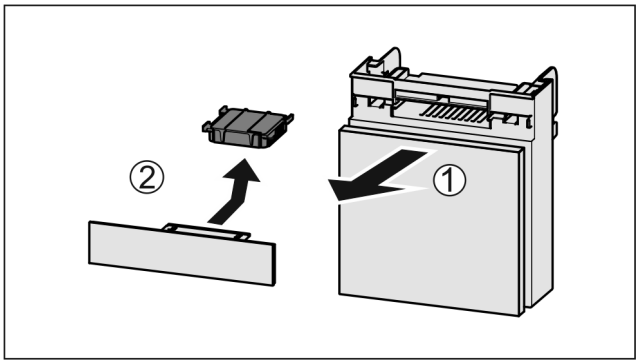


*Fig. 36*

▶ Pull out the compartment *Fig. 36 (1)*.
▶ Remove the carbon filter *Fig. 36 (2)*.

### 8.1.2 Inserting the FreshAir carbon filter

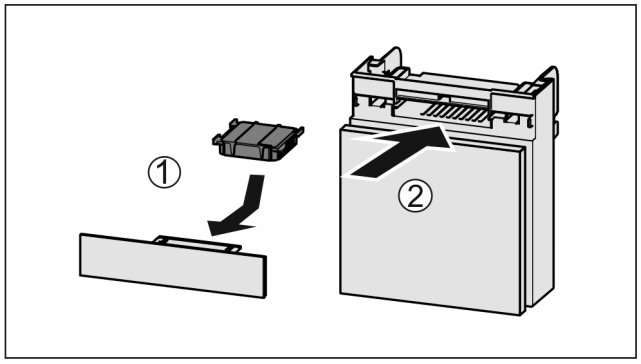


*Fig. 37*

▶ Insert the carbon filter as shown in the diagram *Fig. 37 (1)*.
▷ The carbon filter clicks into place.
If the carbon filter is pointing downwards:
▶ Push the compartment in *Fig. 37 (2)*.
▷ The carbon filter is now ready for use.

## 8.2 Defrosting the appliance

### 8.2.1 Defrosting the fridge compartment

Defrosting is performed automatically. The water from the thawing process drains through the outlet and evaporates.

Water drops or a thin layer of frost or ice can form on the back wall; this is a completely normal part of the appliance's function. This must not be removed.

A layer of frost or ice can from briefly due to the energy-optimised control of the device.

▶ Clean the drain opening regularly (see 8.3 Cleaning the appliance) .

### 8.2.2 Defrosting the freezer compartment with NoFrost

Defrosting is performed automatically with the NoFrost system. The moisture is deposited on the evaporator, is periodically defrosted and evaporates.

The appliance does not need to be defrosted.

## 8.3 Cleaning the appliance

### 8.3.1 Ready

**WARNING**
Danger of electric shock!
▶ Remove the refrigerator connector or interrupt the power supply.

**WARNING**
Risk of fire
▶ Do not damage the refrigeration circuit.

▶ Empty the appliance.
▶ Remove mains connector.

### 8.3.2 Clean the housing

**NOTICE**
Improper cleaning!
Damage to the appliance.
▶ Only use soft cleaning cloths and ph-neutral all-purpose cleaners.
▶ Do not uses abrasive sponges or steel wool which may cause scratches.
▶ Do not use any sharp or abrasive cleaning agents, nor any that contain sand, chloride or acid.

**WARNING**
Risk of injury and damage as a result of hot steam!
Hot steam can lead to burns and can damage the surfaces.
▶ Do not use any steam cleaners!

▶ Wipe the housing down with soft, clean cloth. If very dirty, use lukewarm water with a neutral cleaner. Glass surfaces can also be cleaned with glass cleaner.

### 8.3.3 Cleaning the interior

**NOTICE**
Improper cleaning!
Damage to the appliance.
▶ Only use soft cleaning cloths and ph-neutral all-purpose cleaners.
▶ Do not uses abrasive sponges or steel wool which may cause scratches.
▶ Do not use any sharp or abrasive cleaning agents, nor any that contain sand, chloride or acid.

▶ Plastic surfaces: clean by hand with a soft clean cloth, lukewarm water and a little detergent.
▶ Metal surfaces: clean by hand with a soft clean cloth, lukewarm water and a little detergent.
▶ Drain outlet *Fig. 1 (9)*: remove any deposits with a thin item such as a cotton bud.

### 8.3.4 Clean the components

**NOTICE**
Improper cleaning!
Damage to the appliance.
- ▶ Only use soft cleaning cloths and ph-neutral all-purpose cleaners.
- ▶ Do not uses abrasive sponges or steel wool which may cause scratches.
- ▶ Do not use any sharp or abrasive cleaning agents, nor any that contain sand, chloride or acid.

**Clean with a soft, clean cloth, lukewarm water and some detergent:**

- Door rack
- Shelf
- Dividing shelf
- VarioSafe*
- EasyFresh-Safe cover
- Drawer
  Please note: Do not remove the magnet on the drawer. The magnet ensures the functionality of the IceMaker.*
- Divider in the IceMaker drawer

**Wash in the dishwasher up to 60 °C:**

- Bottle rack
- Holder of the dividing shelf
- IceMaker water tank and water tank lid*
- Ice cube scoop*

- ▶ To disassemble components: see the relevant section.
- ▶ Clean the components.

### 8.3.5 Cleaning the EasyTwist-Ice*

Cleaning is required in the following cases:

- ❑ Initial operation
- ❑ Disuse for more than 48 hours
- ❑ The appliance requires cleaning.

**In the case of initial operation, longer periods of disuse or the appliance requiring cleaning**

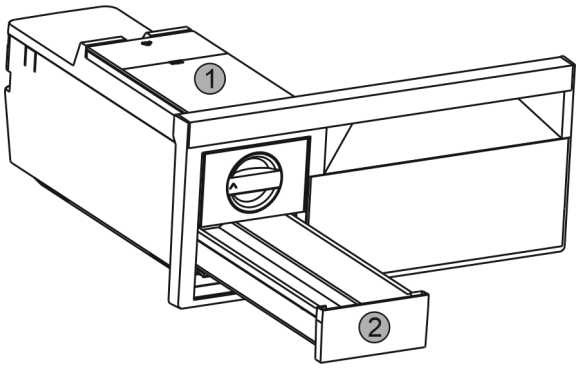


*Fig. 38*

- ▶ Take out the water tank *Fig. 38 (1)* and ice cube drawer *Fig. 38 (2)*.
- ▶ Take out the freezer drawer with EasyTwist-Ice.

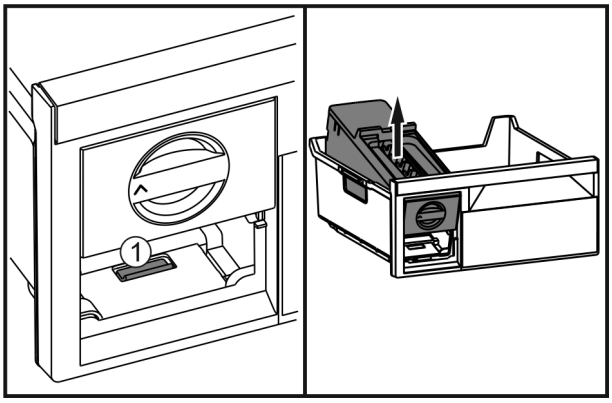


*Fig. 39*

- ▶ Press the lug *Fig. 39 (1)*, lift up the EasyTwist-Ice at the rear and take it out of the freezer drawer.

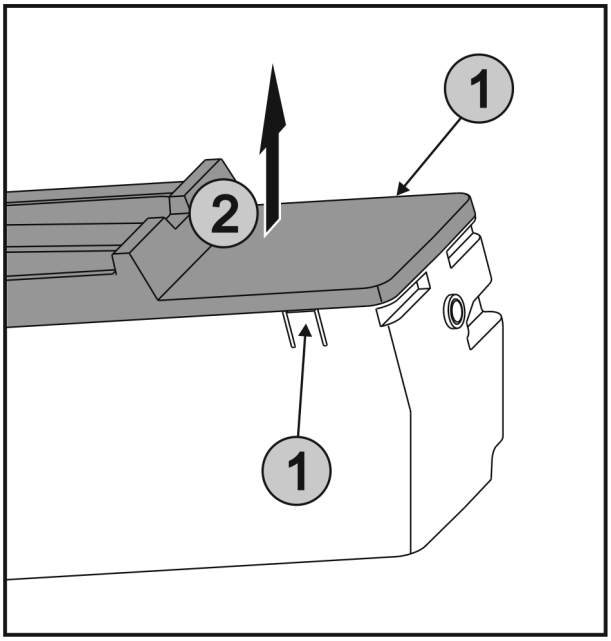


*Fig. 40*

- ▶ Press the lugs *Fig. 40 (1)* on both sides of the EasyTwist-Ice simultaneously and take off the lid *Fig. 40 (2)* to the top.

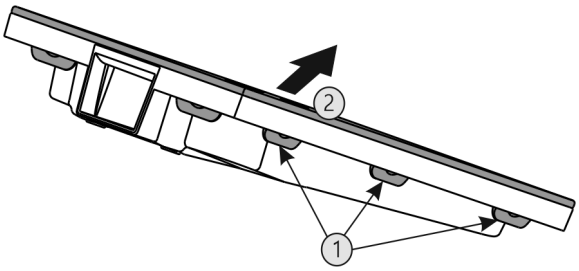


*Fig. 41*

- ▶ Press all lugs *Fig. 41 (1)* in succession and remove the lid *Fig. 41 (2)*.
- ▶ Clean the ice cube drawer, water tank and EasyTwist-Ice with warm water and a little detergent.
- ▶ Assemble the EasyTwist-Ice.

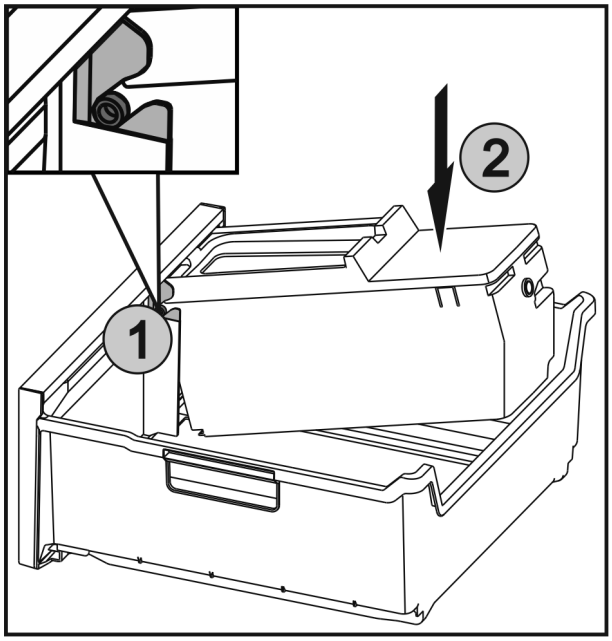


*Fig. 42*

▶ Push the axles *Fig. 42 (1)* on the EasyTwist-Ice into the guides and push the rear side *Fig. 42 (2)* until the lugs engage.
▶ Push in the EasyTwist-Ice drawer.

**WARNING**
Impure water!
Poisoning.
▶ Only fill with potable water.

▶ Fill the water tank with water and insert it. (see 7.8.1 Filling the water tank)

With non-filtered water:
▶ Dispose of any ice cubes that were made within 24 hours of the first ice cubes that were produced.

With filtered water:
▶ Dispose of any ice cubes that were made within 48 hours of the first ice cubes that were produced.

### 8.3.6 Cleaning the IceMaker*

There are various options for cleaning the IceMaker.

Cleaning is required in the following cases:
❑ Initial operation
❑ If out of use for more than 48 hours.*

Ensure that the following conditions are met:
❑ Water tank is clean and has been filled. (see 7.9.1 Fill the water tank*) *
❑ IceMaker drawer is emptied.
❑ IceMaker drawer is in place.
❑ The IceMaker is activated. (see 6.2 Control concept)

**First use or after a long period of non-use**

Clean the IceMaker with the TubeClean function.
▶ Place a 1.5 l empty container (max. height 10 cm) into the drawer under the IceMaker.
▶ Activate the TubeClean function. (see 6.2 Control concept)
▷ The rinse process is prepared (max. 60 min.): Symbol flashes.
▷ Water pipes are rinsed: Symbol flashes.
▷ Rinsing process is complete: Function turns off automatically.
▶ Remove the IceMaker drawer and remove the container.
▶ Clean the IceMaker drawer with warm water and a little detergent.
▶ Push the IceMaker drawer in.
▷ The system starts making ice cubes automatically.
▶ Dispose of any ice cubes that were made 24 hours after the first ice cubes.

**If cleaning is required**

Clean the IceMaker by hand.
▶ Remove the IceMaker drawer and clean with warm water and a little detergent.
▶ Push the IceMaker drawer in.
▷ The system starts making ice cubes automatically.

### 8.3.7 After cleaning

▶ Wipe the appliance and the components dry.
▶ Connect and switch on the appliance.
▶ Activate SuperFrost (see 6.3 Functions) .
The temperature is cold enough:
▶ Place the food inside.
▶ Repeat cleaning regularly.

# 9 Customer help

## 9.1 Technical specifications

| Temperature range | |
|---|---|
| Cooling | 2 °C to 9 °C |
| Freeze | -26 °C to -15 °C |

| Maximum freezer quantity / 24 hrs | |
|---|---|
| Freezer compartment | See the type plate under “Freezer goods … /24 hours” |

| Ice cube production with IceMaker* | |
|---|---|
| Ice cube production / 24 h | At a temperature of -18 °C: 1.2 kg of ice cubes |
| Maximum ice cube production / 24 hours | With the MaxIce function on: 1.5 kg of ice cubes |

| Ice cube production with EasyTwist-Ice* | |
|---|---|
| Time required at -18 °C | approx. 5.5 h |
| Time required with SuperFrost activated | approx. 3 h |

| Lighting | |
|---|---|
| Class[1] | Light source |
| This product contains a light source that meets energy efficiency rating G | LED |

*1 The appliance may contain light sources with different energy efficiency classes. The lowest energy efficiency class is indicated.*

For appliances with a WiFi connection:*

| Frequency specification* | |
|---|---|
| Frequency band | 2.4 GHz |
| Maximum radiated power | <100 mW |
| Purpose of the wireless equipment | Integration in the local WiFi network for data communication |

## 9.2 Operating noises

The appliance makes different noises when it is on.

- At **higher temperatures** the appliance uses less energy but works for longer. It is **quieter**.
- At **lower temperatures** the food is cooled faster. It is **louder**.

Examples:

- Functions on (see 6.3 Functions)
- Fan running
- Food recently added
- High ambient temperature
- Door open for a while

| Noise | Possible cause | Type of noise |
|---|---|---|
| Bubbling and splashing | Coolant flowing into the cooling circuit. | Normal operating noise |
| Hissing | Coolant sprays into the cooling circuit. | Normal operating noise |
| Humming | The appliance is cooling. The volume depends on the cooling output. | Normal operating noise |
| Humming and rustling | The fan is running. | Normal operating noise |
| Clicking | Components are switched on and off. | Normal switching noise |
| Rattling or humming | Valves or flaps are working.<br>The water tank pump is on.* | Normal switching noise |

| Noise | Possible cause | Type of noise | Lifting |
|---|---|---|---|
| Vibration | Improper setup | Defective noise | Level the appliance using the adjustable feet. |
| Rattling | Components, items inside the appliance | Defective noise | Secure components.<br>Leave enough space between the items. |

## 9.3 Technical fault

Your appliance is designed and built to ensure it works reliably and has a long service life. In the unlikely event that a fault occurs during operation, please check whether it is due to an operating error. If so, you will be charged for the callout and repair costs even if it falls within the warranty period.

You can fix the following faults yourself.

### 9.3.1 Appliance function

| Defect | Cause | Remedy |
|---|---|---|
| **The appliance is not working.** | → The appliance is not switched on. | ▶ Switch the appliance on. |
| | → The power plug is not properly plugged into the socket. | ▶ Check the power plug. |
| | → There is something wrong with the power outlet fuse. | ▶ Check the fuse. |
| | → Power cut | ▶ Keep the appliance closed.<br>▶ Protecting food: Lay freezer packs on top of the food or use another freezer if the power is off for a prolonged period.<br>▶ Do not re-freeze defrosted food, |
| | → The appliance plug does not fit the appliance properly. | ▶ Check the appliance plug. |
| **Temperature is not cold enough.** | → The appliance door is not closed properly. | ▶ Close the appliance door. |
| | → Not enough ventilation. | ▶ Keep ventilation grille clear, and clean it. |
| | → The ambient temperature is too high. | ▶ Solution: (see 1.3 Appliance range of use) . |
| | → The appliance was opened too many times or for too long. | ▶ Wait to see if the required temperature corrects itself. If not, contact Customer Service (see 9.4 Customer Services) . |
| | → Too much fresh food was placed inside without SuperFrost. | ▶ Solution: (see SuperFrost) |
| | → The temperature is set incorrectly. | ▶ Turn down the temperature and check after 24 hours. |
| | → The appliance is too close to a heat source (oven, radiator, etc). | ▶ Move the appliance or the heat source. |
| **The door seal is defective or needs** | → The door seal can be replaced. It can be replaced without the need for special tools. | ▶ Contact Customer Services (see 9.4 Customer Services) . |

| Defect | Cause | Remedy |
|---|---|---|
| **to be replaced for another reason.** | | |
| **The appliance builds up too much ice or condensation.** | → The door seal may have slipped out of its groove. | ▶ Check that the door seal is well fitted in the groove. |
| **The appliance is hot to touch on the outside*.** | → The heat of the refrigeration circuit is used to avoid condensation. | ▶ This is normal. |

### 9.3.2 Features

| Defect | Cause | Remedy |
|---|---|---|
| **The IceMaker is not producing ice cubes.*** | → The IceMaker is not on. | ▶ Activate the IceMaker. |
| | → The drawer of the IceMakers is not connected properly. | ▶ Push the drawer in correctly. |
| | → The water tank is not pushed in properly. | ▶ Push the water tank in.* |
| | → There is not enough water in the water tank. | ▶ Fill the water tank.* |
| **The internal light does not come on.** | → The appliance is not switched on. | ▶ Switch the appliance on. |
| | → The door was open for longer than 15 minutes. | ▶ Interior lighting turns off automatically after approx. 15 min. with the door open. |
| | → The LED light is faulty or the cover is damaged: | **WARNING**<br>Risk of injury due to electric shock!<br>There are live electrical parts under the cover.<br>▶ Only ever have the inside LED light replaced or repaired by customer service or trained personnel. |

## 9.4 Customer Services

First check if you can fix the error yourself (see 9 Customer help) . If you can't, contact Customer Services.

Please refer to the enclosed “Liebherr-Service” brochure for the address.

**WARNING**
Unprofessional repair!
Injuries.
- ▶ Have any repairs and action - not expressly specified - on the appliance and mains cable carried out by service personnel only. (see 8 Maintenance)
- ▶ A damaged mains cable may only be replaced by the manufacturer, the manufacturer’s Customer Service or a similarly qualified person.
- ▶ In the case of appliances with an IEC connector, the change may be made by the customer.

### 9.4.1 Contact Customer Services

Make sure you have the following appliance data at the ready:

- ❑ Appliance name (model and index)
- ❑ Service no. (Service)
- ❑ Serial no. (S no.)

▶ Look up the appliance information on the display (see Info) .
**-or-**
▶ Referring to appliance info on the nameplate (see 9.5 Model plate) .

- ▶ Note down the appliance information.
- ▶ Notify Customer Services of the following: Give us the appliance data.
- ▷ This will help us to provide you with a faster, more accurate service.
- ▶ Follow any further instructions given by Customer Services.

## 9.5 Model plate

The model plate is behind the drawers on the inside of the appliance.

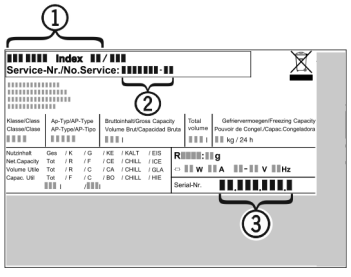


*Fig. 43*

**(1)** Appliance description
**(2)** Service no.
**(3)** Serial no.

▶ Note the data on the model plate.

# 10 Shutting down

▶ Empty the appliance.
▶ Turn off the IceMaker .*
▶ Turn off the appliance (see 6.4 Settings) .
▶ Remove mains connector.
▶ Remove appliance connector if required: Remove and move from left to right at the same time.
▶ Clean the appliance (see 8.3 Cleaning the appliance) .
▶ Leave the door open to avoid bad smells building up.

# 11 Disposal

## 11.1 Preparing appliance for disposal




Liebherr uses batteries in some of its appliances. In the EU, for environmental reasons, legislation obliges the end user to remove these batteries before disposing of old appliances. If your appliance contains batteries, a corresponding notice is attached.

Lamps — If you can remove the lamps yourself without destroying them, also remove these before disposal.

▶ Take the appliance out of operation.
▶ Appliances with batteries: remove the batteries. For description, see **Maintenance** chapter.
▶ If possible: remove lamps without destroying them.

## 11.2 Disposing of the appliance in an environmentally friendly manner



The appliance still contains valuable materials and must be disposed of separately from unsorted municipal waste.







Dispose of batteries separately from the old appliance. To do this, you can return the batteries free of charge to retailers as well as recycling centres and collection centres for recyclable materials.

Lamps — Dispose of removed lamps via the respective collection systems.

For Germany: — You can dispose of the appliance free of charge via the class 1 collection containers at the local recycling and recyclable material collection centres. When purchasing a new fridge/freezer, if the sales area > 400 $m^2$, retailers will also take back the old appliance free of charge.

**WARNING**
Leaking coolant and oil!
Fire. The coolant contained in the appliance is eco-friendly, but also flammable. The oil contained in the appliance is flammable. Escaping coolant and oil can ignite if the concentration is high enough and in contact with an external heat source.
▶ Do not damage the pipelines of the coolant circuit and the compressor.

▶ Transport the appliance without damaging it.
▶ Dispose of batteries, lamps and the appliance according to the above specifications.



home.liebherr.com/fridge-manuals

EN fridge/freezer

Issue date: 20220531

**Part number index: 7080436-00**

Liebherr-Hausgeräte Marica EOOD
Bezirk Plovdiv
4202 Radinovo
Bulgarien