User Guide

Quality, Design and Innovation



home.liebherr.com/fridge-manuals

LIEBHERR

Contents

1 The appliance at a glance..... 3
1.1 Delivered contents..... 3
1.2 Appliance and equipment overview..... 3
1.3 Range of appliance use..... 3
1.4 Conformity..... 4
1.5 EPREL Database..... 4

2 General safety instructions..... 4

3 Start-up..... 5
3.1 Turning on the appliance..... 5
3.2 Insert the equipment..... 6

4 Food management..... 6
4.1 Storing food..... 6
4.2 Storage times..... 7

5 Energy saving..... 8

6 Use..... 8
6.1 Controls and displays..... 8
6.1.1 Status display..... 8
6.1.2 Navigation..... 9
6.1.3 Display symbols..... 9
6.2 Operating logic..... 9
6.2.1 Activating/deactivating settings..... 9
6.2.2 Selecting function value..... 9
6.2.3 Activating/deactivating settings..... 10
6.2.4 Selecting the setting value..... 10
6.2.5 Calling up the customer menu..... 10
6.3 Functions..... 10
Temperature..... 10
SuperCool..... 11
SuperFrost..... 11
PowerCool..... 11
PartyMode..... 11
HolidayMode..... 11
EnergySaver..... 12
HydroBreeze*..... 12
IceMaker / MaxIce*..... 12
VarioTemp..... 12
6.4 Settings..... 13
Language..... 13
Setting up the WLAN connection..... 13
Entry lock..... 13
Display brightness..... 13
Door alarm..... 14
Temperature unit..... 14
Info..... 14
SabbathMode..... 14
CleaningMode..... 14
TubeClean*..... 14
Ice cubes*..... 15
BioFresh B-Value*..... 15
D-Value..... 15
Reminder..... 15
Turn off appliance..... 15
6.5 Error messages..... 15
6.5.1 Warnings..... 15
6.5.2 Message..... 16
6.5.3 DemoMode..... 16

7 Equipment..... 16
7.1 Door racks..... 16
7.2 Split shelf..... 17
7.3 VarioSafe..... 17
7.5 Variable bottle shelf..... 18
7.6 Drawers..... 18
7.7 Fruit & Vegetable-Safe cover..... 19
7.8 Humidity control..... 20
7.11 VarioSpace..... 21
7.12 Accessories..... 22

8 Maintenance..... 24
8.1 FreshAir carbon filter..... 24
8.2 Water tank*..... 24
8.3 Water filter*..... 25
8.4 Defrosting the appliance..... 25
8.5 Cleaning the appliance..... 25

9 Customer support..... 28
9.1 Technical specifications..... 28
9.2 Operating noises..... 28
9.3 Technical faults..... 29
9.4 Customer service..... 30
9.5 Rating plate..... 30

10 Decommissioning..... 31

11 Disposal..... 31
11.1 Preparing appliance for disposal..... 31
11.2 Disposing of the appliance in an environmentally friendly manner..... 31

The manufacturer is constantly working to improve all types and models. Therefore, please be aware that we reserve the right to make changes to the shape, equipment and technology.

Symbol	Explanation
	Read instructions Please read the information in these instructions carefully to understand all of the benefits of your new appliance.

Symbol	Explanation
	Full instructions on the internet You can find detailed instructions on the internet using the QR code on the front of these instruction or by entering the service number at **home.liebherr.com/fridge-manuals**. The service number can be found on the serial tag: 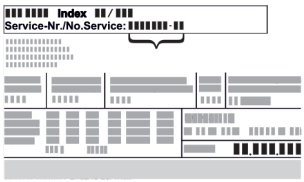 *Fig.* Example illustration
	Check appliance Check all parts for transport damage. If you have any complaints, please contact your agent or customer service.
	Differences These instructions apply to a range of models, so there may be differences. Sections that apply to certain models only are indicated by an asterisk (*).
	Instructions and results Instructions are marked with a ▶. Results are marked with a ▷.
	Videos Videos about the appliances are available on the YouTube channel of Liebherr-Hausgeräte.

These operating instructions apply to:

CBN (st) (bs) (be) (sd) (c) (d)	57..(i) / 77..(i)

Note
If your appliance has an N in its appliance designation, it is a NoFrost appliance.

1 The appliance at a glance

1.1 Delivered contents

Check all parts for damage during transport. If you have any complaints, please contact the dealer or Customer Service (see 9.4 Customer service) .

Delivery contains the following parts:
- Standalone appliance
- Equipment (depending on your model)
- Installation parts (depending on your model)
- “Quick Start Guide”
- “Installation Guide”
- Service brochure

1.2 Appliance and equipment overview

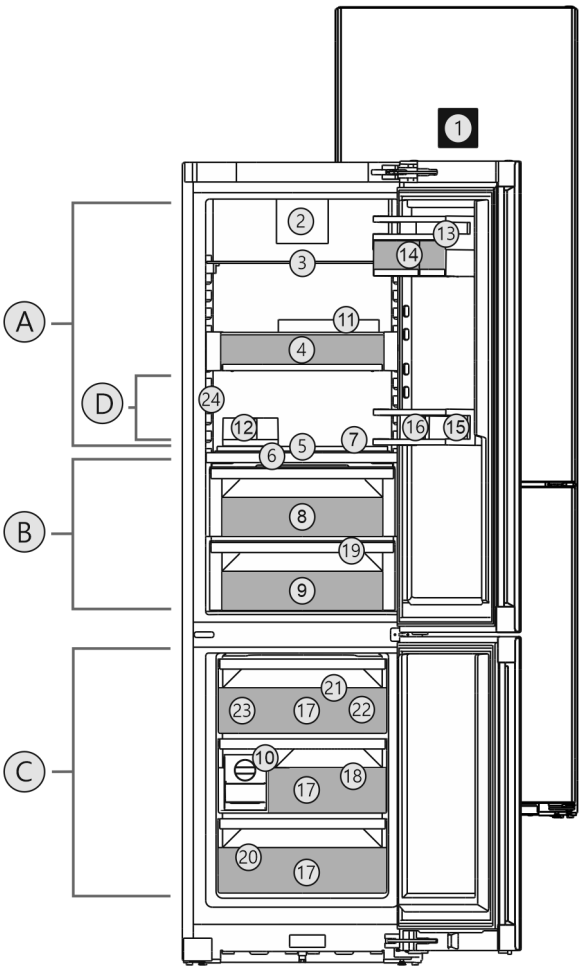

Fig. 1 Example illustration

Temperature range

(A) Fridge compartment
(B) BioFresh
(C) Freezing compartment
(D) Coldest zone

Equipment

(1) Display in the door
(2) Fan with FreshAir activated charcoal filter
(3) Split shelf
(4) VarioSafe
(5) HydroBreeze*
(6) Lid for Fruit & Vegetable-Safe
(7) Variable bottle shelf
(8) Fruit & Vegetable-Safe
(9) Meat & Dairy-Safe/ Fisch & Seafood-Safe*
(10) EasyTwist-Ice*
(11) Egg tray
(12) Butter dish
(13) Storage rack
(14) VarioBox
(15) Bottle holder
(16) Bottle rack
(17) Freezer drawer
(18) VarioSpace
(19) Drain hole
(20) Serial tag
(21) Cold storage accumulators
(22) Ice cube scoop* / ice cube tray*
(23) IceMaker*
(24) InfinitySpring*

Note
▶ The shelves, drawers, and baskets are arranged for optimal energy efficiency in the factory configuration. However, changes to the arrangement within the given insertion options – for example the arrangement of shelves in the fridge compartment – have no effect on energy consumption.

1.3 Range of appliance use

Normal use

The appliance is only suitable for cooling food for residential or other similar environments. This includes the following types of uses

- in staff kitchens, bed and breakfasts,
- by guests in country homes, hotels, motels and other types of accommodations,
- for catering and similar wholesale services.

The appliance is not suitable as a built-in unit;

All other types of uses are not permitted.

Foreseeable misuse

The following uses are specifically prohibited:

- Storage and cooling of medication, blood plasma, laboratory preparations or similar substances and products in accordance with the Medical Device Directive 2007/47/EC
- Use in areas at risk of explosion

Incorrect appliance use can cause damage to the stored products or cause them to spoil.

Climate ratings

The appliance is set to operate within specific ambient temperature limits according to its climate rating The climate rating for your appliance is printed on the rating plate

Note

▶ To guarantee trouble-free operation, comply with the indicated ambient temperatures.

Climate rating	for ambient temperatures from
SN	10 °C to 32 °C
N	16 °C to 32 °C
ST	16 °C to 38 °C
T	16 °C to 43 °C

1.4 Conformity

The refrigerant circuit has been tested for leaks. The appliance complies with the applicable safety regulations and with the directives 2014/35/EU, 2014/30/EU, 2009/125/EC, 2011/65/EU, 2010/30/EU and 2014/53/EU.

The full text of the EU Declaration of Conformity is available on the following website: www.Liebherr.com

The BioFresh compartment meets the requirements of a cold storage compartment as set out in DIN EN 62552:2020.

1.5 EPREL Database

Details about energy labeling and ecodesign requirements will be available on the European product database (EPREL) from March 1, 2021. You can access the product database at the following link: https://eprel.ec.europa.eu/ You will be asked to enter the model ID. You can find the model ID on the type plate.

2 General safety instructions

Please keep these operating instructions in a safe place so you can refer back to them at any time.

If you pass the appliance on, please hand these operating instructions to the new owner.

Read these operating instructions before use in order to use the appliance safely and correctly. Follow the instructions, safety instructions and warning messages included at all times. They are important for ensuring you can operate and install the appliance safely and without any problems.

Dangers for the user:

- This appliance can be operated by children as well as by persons with reduced physical, sensory or mental capabilities or lack of experience and knowledge if they are supervised or have been instructed in the safe use of the appliance and understand the associated risks. Children must not play with the appliance. Cleaning and user maintenance must not be performed by children unless they are supervised. Children between the ages of 3 and 8 may load and unload the appliance. Children under the age of 3 must be kept away from the appliance if they are not constantly supervised.
- The socket must be easily accessible so that the appliance can be disconnected quickly from the electricity in an emergency. It must not be located in the area behind the appliance.
- When disconnecting the appliance from the outlet, always take hold of the plug. Do not pull on the cable.
- Disconnect the power plug or switch off the power if a fault occurs.
- Do not damage the mains power line. Do not operate the appliance from a defective mains power line.
- Repairs and work on the appliance may only be carried out by after sales service or other specifically trained qualified personnel.
- The appliance should only be assembled, connected and disposed of in accordance with the instructions.
- The manufacturer is not liable for damage arising from incorrect connection to the water supply.*

Risk of fire:

* Depending on model and options

- The refrigerant contained within the appliance (specifications on the rating plate) is environmentally friendly, but flammable. Leaking refrigerant can ignite.
  - Do not damage the pipes of the refrigerant circuit.
  - Do not handle ignition sources inside the appliance.
  - Do not use electrical devices inside the appliance (e.g. steam cleaners, heaters, ice cream makers, etc.).
  - If refrigerant leaks: Remove naked flames or ignition sources located near the area of the leak. Air the room well. Contact the customer service department.
- Do not store explosive materials or spray cans with flammable propellants, such as e.g. butane, propane, pentane, etc. in the appliance. You can recognize such spray cans by the printed contents or a flame symbol. Any leaking gasses can be ignited by electrical components.
- Keep lit candles, lamps and other objects with naked flames away from the appliance so they do not cause a fire.
- Alcoholic beverages or other containers holding alcohol must always be tightly sealed for storage purposes. Any leaking alcohol can be ignited by electrical components

Tipover hazard:

- Do not stand or climb on the base, drawers, doors, etc. This applies in particular to children.

Risk of food poisoning:

- Do not consume food that has passed its best before date.

Danger of frostbite, feelings of numbness and pain:

- Avoid prolonged skin contact with cold surfaces or chilled/frozen food or take protective measures, e.g. wear gloves.

Risk of injury and damage:

- Hot steam may lead to injuries. Do not use any electrical heating or steam cleaning equipment, naked flames or defrosting sprays for defrosting
- Do not remove ice with sharp objects

Risk of crushing:

- Do not reach into the hinge when opening and closing the door. Fingers may get trapped.

Symbols on the device:



The symbol can be on the compressor. It refers to the oil in the compressor and refers to the following danger: Can be lethal if swallowed or inhaled. This notice only applies for recycling. There is no danger during normal operation.



The symbol is located on the compressor and indicates the danger of inflammable materials. Do not remove the label.



This label or a similar one can be located on the rear of the appliance. It refers to the foamed-in panels in the door and/or the housing. This notice only applies for recycling. Do not remove the label.

Observe the warning messages and other detailed information in the other sections:

⚠	DANGER	indicates a hazardous situation, which if not avoided, will result in death or serious injury.
⚠	WARNING	indicates a hazardous situation, which if not avoided, could result in death or serious injury.
⚠	CAUTION	indicates a hazardous situation, which if not avoided, will result in minor or moderate injury.
	NOTICE	indicates a hazardous situation, which if not avoided, could result in damage to property.
	Note	indicates useful advice and tips.

3 Start-up

3.1 Turning on the appliance

Make sure that the following requirements are met:

- ❑ Appliance is set up and connected according to installation instructions.
- ❑ All adhesive strips, adhesive and protective films, as well as transport safety devices in and on the appliance are removed.
- ❑ All advertising material has been removed from the drawers.

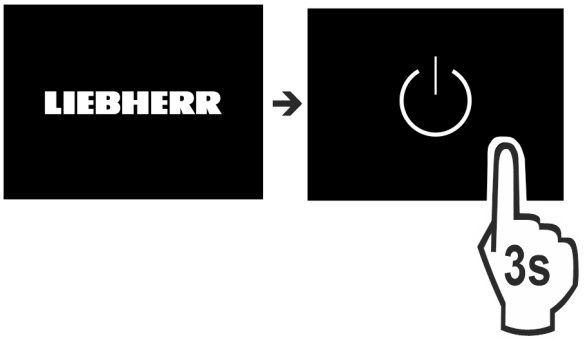

Fig. 2

▶ Switch on the appliance using the display.

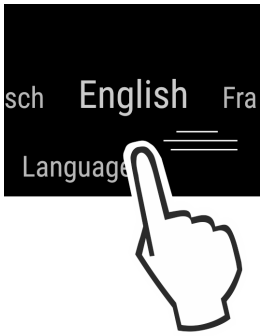

Fig. 3

▶ Select the language.
▷ The status display appears.

The appliance starts in DemoMode:

If the appliance starts in DemoMode, you can deactivate DemoMode within the next 5 minutes.

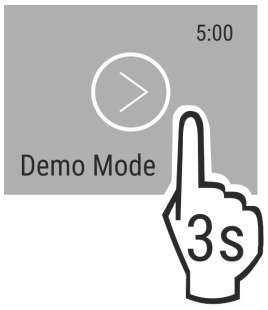

Fig. 4

▶ Press DemoMode for 3 seconds.
▷ DemoMode is deactivated.

Note
The manufacturer recommends:
▶ Place the food inside: Wait for around 6 hours until the set temperature is reached.
▶ **Store frozen foods** at -18 °C or colder.

3.2 Insert the equipment

▶ Insert the supplied equipment to help you make the most of the appliance.
▶ Purchase the SmartDevice Box and insert it (see smart-device.liebherr.com).*
▶ Install the SmartDevice app (see apps.home.liebherr.com).
▶ Insert the water tank (see 8.2.2 Inserting the water tank) .*
▶ Insert the drip tray (see 8.2.3 Removing / inserting the drip tray) .*

Note
You can purchase accessories from the Liebherr household appliance store (home.liebherr.com).

4 Food management

4.1 Storing food

WARNING
Danger of fire
▶ Do not use electrical appliances inside the food storage compartments of the appliance, unless they are of the type recommended by the manufacturer.

Note
Insufficient ventilation results in an increase in energy consumption and reduction of the refrigerating performance
▶ Always keep the air slots unobstructed.

When storing food, remember these basic rules:
❑ Do not obstruct the air vents on the back wall.
❑ Do not obstruct the air vents on the fan.
❑ Food is well sealed.
❑ Food that easily absorbs or emits odor or taste, are in sealed containers or are covered.
❑ Raw meat or fish is in clean, sealed containers so that other food cannot be touched or drip on them.
❑ Liquids are in sealed containers.
❑ Food is stored spaced apart to ensure good air circulation.

Note
Failure to follow these guidelines can lead to food perishing.

4.1.1 Fridge

The natural air circulation means the temperature varies in different sections.

Arranging the food:
▶ In the top section and in the door: butter and cheese, preserves, and tubes.
▶ The coldest zone *Fig. 1 (D)* is for: easily perishable food such as prepared meals.

4.1.2 BioFresh

BioFresh allows some fresh food to be stored longer compared to conventional cooling.

Food with a “use by” date must still be consumed by the date indicated on the package

If the temperature drops below 0 °C, food can start to freeze.

Note
Store cold-sensitive fruit and vegetables in the cooling section, such as cucumber, eggplant, zucchini, and tropical fruit.

Fruit & Vegetable-Safe

This provides a fresh storage climate with the lid closed. A moist climate is suitable for storing unsealed food with a high moisture content (e.g. salad, vegetables, fruit).

The humidity depends on the moisture content of the stored items and how frequently the door is opened. You can regulate the moisture.

Arranging the food:
▶ Place unsealed fruit and vegetables.
▶ Excessive moisture: Regulate the air humidity (see 7.8 Humidity control) .

Meat & Dairy-Safe

The DrySafe provides a relatively dry storage environment. A dry climate is suitable for dry or sealed food (e.g. dairy products, meat, fish, sausage).*

The DrySafe provides a relatively dry storage environment. A dry climate is suitable for dry or sealed food (e.g. dairy products, meat, sausage).*

Arranging the food:
▶ Place dry or sealed food.

Fish & SeaFood-Safe -2°C | 0°C

A relatively dry storage climate is set here. This climate is suitable for dry or packaged foods (e.g. dairy products, meat, fish, seafood, sausage).

A Fish & Seafood tray that can be moved or removed is included in the compartment.

The temperature can be adjusted via the display in the control panel. Dividing the compartment into different temperature zones is only possible when the tray is inserted. (see Temperature)

The following temperature combinations are possible:

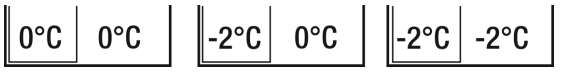

Fig. 5

Arranging the food:

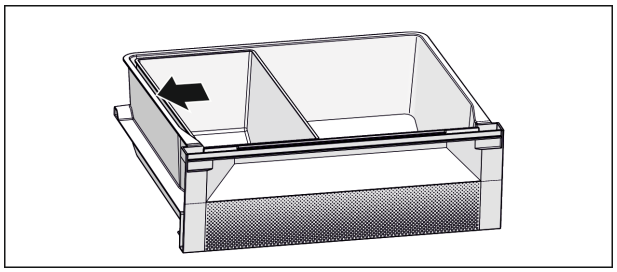

Fig. 6

▶ Position Fish & Seafood tray. The position shown *Fig. 6 ()* gives you an optimal cooling function.
▶ Zone -2 °C: Place fresh seafood or fish.
▶ Zone 0 °C: Store dairy products or packaged meat.

4.1.3 Freezer

This provides a dry, frosty storage climate at -18 °C. A frosty climate is suitable for storing frozen food and goods for several months, preparing ice cubes, or freezing fresh food.

Freezing food

You can freeze as many kilograms of fresh food within 24 hours as indicated on the nameplate (see 9.5 Rating plate) under "freezing capacity ... kg/24h".

To ensure that the food freezes quickly to the core, keep to the following quantities per pack:

- Fruit, vegetables up to 1 kg
- Meat up to 2.5 kg

Before freezing, please note the following:

❑ SuperFrost is activated (see 6.3 Functions) when the amount of food to freeze exceeds approx. 2 kg.
❑ With a small volume of frozen goods: SuperFrost is activated approx. 6 hours prior.
❑ With the maximum volume of frozen goods: SuperFrost is activated approx. 24 hours prior.

Arranging the food:

CAUTION
There is a risk of injury from pieces of broken glass!
Bottles and cans containing drinks can split or crack when frozen. This applies in particular to carbonated drinks.
▶ The *BottleTimer* function must be used when freezing bottles and cans with drinks.

With a small amount of frozen goods:
▶ Place packaged groceries in the top drawer.
▶ If possible, place groceries at the back of the drawer near the rear wall.
With the maximum amount of frozen goods:
▶ Distribute packaged groceries across all drawers, but do not place any groceries in the lowest drawer.
▶ If possible, place groceries at the back of the drawer near the rear wall.
With the maximum amount of frozen goods:
▶ Once SuperFrost activates automatically, place food into the drawer.

Defrosting food

- in the fridge compartment
- in the microwave
- in the oven/fan oven
- at room temperature

WARNING
Danger of food poisoning!
▶ Do not re-freeze defrosted food.

▶ Remove only the food you need for now.
▶ Use defrosted food as quickly as possible

4.2 Storage times

The storage times given are guidelines

Food with a “use by” date must still be consumed by the date indicated on the package

4.2.1 Fridge

The best-before date stated on the packaging applies.

4.2.2 BioFresh

Note
You can check the guideline settings in the BioFresh app https://home.liebherr.com/de/deu/service/apps/landing-page apps-emea.html .

Guideline storage times for the Meat & Dairy-Safe		
Butter	at 1 °C	up to 90 days
Hard cheese	at 1 °C	up to 110 days
Milk	at 1 °C	up to 12 days
Sausage, cold cuts	at 1 °C	up to 8 days
Poultry	at 1 °C	up to 6 days
Pork	at 1 °C	up to 6 days
Beef	at 1 °C	up to 6 days
Game	at 1 °C	up to 6 days

Note
▶ Note that higher-protein foods spoil more quickly So, shellfish and crustaceans perish faster than fish, and fish perishes faster than meat.

Guideline storage times for the Fruit & Vegetable-Safe		
Vegetables, lettuce		
Artichokes	at 1 °C	up to 14 days
Celery	at 1 °C	up to 28 days
Cauliflower	at 1 °C	up to 21 days
Broccoli	at 1 °C	up to 13 days
Endives	at 1 °C	up to 27 days
Mâche	at 1 °C	up to 19 days
Peas	at 1 °C	up to 14 days
Kale	at 1 °C	up to 14 days
Carrots	at 1 °C	up to 80 days

Guideline storage times for the Fruit & Vegetable-Safe		
Garlic	at 1 °C	up to 160 days
Cabbage turnip	at 1 °C	up to 14 days
Iceberg lettuce	at 1 °C	up to 13 days
Herbs	at 1 °C	up to 13 days
Leeks	at 1 °C	up to 29 days
Mushrooms	at 1 °C	up to 7 days
Radishes	at 1 °C	up to 10 days
Brussels sprouts	at 1 °C	up to 20 days
Asparagus	at 1 °C	up to 18 days
Spinach	at 1 °C	up to 13 days
Savoy cabbage	at 1 °C	up to 20 days
Fruit		
Apricots	at 1 °C	up to 13 days
Apples	at 1 °C	up to 80 days
Pears	at 1 °C	up to 55 days
Blackberries	at 1 °C	up to 3 days
Dates	at 1 °C	up to 180 days
Strawberries	at 1 °C	up to 7 days
Figs	at 1 °C	up to 7 days
Blueberries	at 1 °C	up to 9 days
Raspberries	at 1 °C	up to 3 days
Red currants	at 1 °C	up to 7 days
Cherries, sweet	at 1 °C	up to 14 days
Kiwi	at 1 °C	up to 80 days
Peaches	at 1 °C	up to 13 days
Plums	at 1 °C	up to 20 days
Cranberries	at 1 °C	up to 60 days
Rhubarb	at 1 °C	up to 13 days
Gooseberries	at 1 °C	up to 13 days
Grapes	at 1 °C	up to 29 days

Guideline storage times for the Fish & Seafood-Safe*		
Seafood		
Crab	at -2 °C	up to 4 days
Mussels	at -2 °C	up to 6 days
Sushi	at -2 °C	up to 4 days
Fish	at -2 °C	up to 4 days

4.2.3 Freezer

Guidelines for storage periods for various foods		
Ice cream	at -18 °C	2 to 6 months
Sausage, ham	at -18 °C	2 to 3 months
Bread, bakery products	at -18 °C	2 to 6 months
Game, pork	at -18 °C	6 to 9 months
Fish, fatty	at -18 °C	2 to 6 months

Guidelines for storage periods for various foods		
Fish, lean	at -18 °C	6 to 8 months
Cheese	at -18 °C	2 to 6 months
Poultry, beef	at -18 °C	6 to 12 months
Vegetables, fruit	at -18 °C	6 to 12 months

5 Energy saving

- Always ensure good ventilation. Do not obstruct ventilation openings or grilles.
- Never block air slits in the fan.
- Do not install the appliance in direct sunlight or next to a stove, heater or similar heat source.
- Energy consumption depends on installation conditions such as the ambient temperature (see 1.3 Range of appliance use) . A warmer ambient temperature can increase the energy consumption.
- Avoid opening the appliance door for any longer then necessary
- The lower the temperature is set the higher the energy consumption.
- Sort your food items: home.liebherr.com/food.
- All food stored in the appliance should be well wrapped and covered. This prevents frost buildup.
- Only take food out for as long as necessary so that it does not get too warm.
- Insertion of warm foods: first let the food cool down to room temperature.
- Defrost frozen food in the fridge
- For longer periods of absence, use HolidayMode (see HolidayMode) .

6 Use

6.1 Controls and displays

The display provides a quick overview of the temperature setting and the status of functions and settings. You can control the functions and settings either by deactivating/activating them or by selecting a value.

6.1.1 Status display

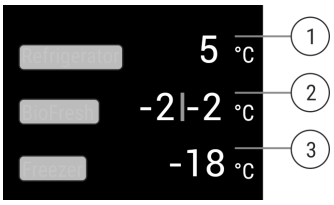

Fig. 7 *

(1) Fridge compartment temperature display
(2) Temperature display BioFresh (Fish & SeaFood-safe)
(3) Freezer compartment temperature display

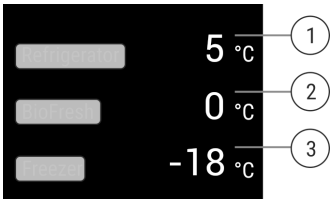

Fig. 8 *

(1) Fridge compartment temperature display
(3) Freezer compartment temperature display

*** Depending on model and options**

(2) Temperature display
BioFresh

The Status display shows the set temperatures and is the home display. From there, you can navigate to the options and settings.

6.1.2 Navigation

Navigate in the menu to access the individual functions. An audible signal sounds after confirming a function or setting. If no selection is made after 10 seconds the display switches to the Status display.

The appliance is operated by swiping and confirming in the display:



Fig. 9

Back:

- Confirm your selection in the submenu. The display returns to the menu.
- Select . The display returns to the function/setting.

Back to Status display:

- Close and open the door.
- Wait 10 seconds. The display changes to the Status display.

6.1.3 Display symbols

The display symbols provide information about the current appliance status.

Symbol	Appliance status
	**Standby** The appliance or temperature zone is turned off.
 	**Flashing number** Appliance is working. Temperature flashes until the set temperature is reached.
 	**Flashing symbol** Appliance is working. Setting is made.

6.2 Operating logic

6.2.1 Activating/deactivating settings

You can activate/deactivate the following functions:

Symbol	Function
	SuperCool[x]
	PowerCool[x]
	SuperFrost[x]
	IceMaker and MaxIce[x]*
	PartyMode[x]
	HolidayMode
	EnergySaver
	HydroBreeze*
	VarioTemp

[x] When a function is on, the appliance works harder. This means the appliance could make louder noises and consume more energy.

▶ Swipe left in the display until the function appears.
▶ Confirm selected function with a short tap.
▷ You hear the confirmation tone.
▷ Status appears in the menu.
▷ Function is on/off.

6.2.2 Selecting function value

With the following functions you can set a value in the submenu:

Symbol	Function
	**Cool:** Setting the temperature Turn on/off the temperature zone
	**Freeze:** Setting the temperature Turn on/off the temperature zone
	**VarioTemp:** Setting the temperature Turn on/off the temperature zone

▶ Swipe left in the display until the function appears.
▶ Confirm selected function with a short tap.
▶ Select the setting value by swiping the display.

Setting the temperature

▶ Confirm selected value with a short tap.
▷ You hear the confirmation tone.
▷ The display changes to blue when it is activated.
▷ Display switches back to the menu.

Switching the temperature zone on/off

▶ Press Confirm for 3 seconds.
▷ You hear the confirmation tone.
▷ Display returns to the status screen.

6.2.3 Activating/deactivating settings

You can activate/deactivate the following settings:

Symbol	Setting
	WiFi[1]
	Entry lock[2]
	SabbathMode[2]
	Cleaning Mode[2]
	Reminders[1]
	Reset[2]
	Switch off [2]

▶ Swipe left in the display until Settings  appears.
▶ Confirm settings by tapping.
▶ Swipe until you can see the setting you want.

[1] **Activate setting (short press)**
▶ Tap briefly to confirm.
▷ You hear the confirmation tone.
▷ Status appears in the menu.
▷ Setting is activated / deactivated.

[2] **Activate setting (long press)**
▶ Press selection for 3 seconds to confirm.
▷ You hear the confirmation tone.
▷ Status appears in the menu.
▷ Display changes.

6.2.4 Selecting the setting value

With the following settings you can set a value in the submenu:

Symbol	Settings
	Brightness
	Door alarm
	Temp. unit
	Language

▶ Swipe the display to the left until the settings  are displayed.
▶ Confirm the settings by tapping.
▶ Swipe until you can see the setting you want.
▶ Tap briefly to confirm.
▶ Select the desired setting value by swiping the display.
▶ Tap briefly to confirm.
▷ You hear the confirmation tone.
▷ Status appears briefly in the submenu.
▷ Display switches back to the menu.

6.2.5 Calling up the customer menu

The customer menu provides the following settings:

Symbol	Function
	BioFresh B-Value [1]*
	D-Value [1]
	TubeClean[2]*
	Ice cube[1]*
	Software

▶ Swipe left in the display until the settings  appear.
▶ Tap settings.
▷ The submenu appears.
▶ Swipe left in the display until the appliance information  appears.
▶ Press for 3 seconds.
▷ The input menu for a numerical code appears.
▶ Enter the numerical code 151.
▷ The customer menu appears.
▶ Swipe left in the display until the desired setting appears.

[1] **Select the setting value**
▶ Tap briefly to confirm.
▷ You hear the confirmation tone.
▷ Status appears briefly in the display.
▷ The display switches back to the menu.

[2] **Activate setting**
▶ To confirm, press the display for 3 seconds.
▷ You hear the confirmation tone.
▷ Status appears in the display.
▷ The symbol flashes as long as the appliance is working.

6.3 Functions

 Temperature

The temperature depends on the following factors:
- the number of times the door is opened
- The duration the door is opened
- the room temperature of the installation location
- the type, temperature and amount of food

Temperature zone		Recommended setting
 Fridge		5 °C
 compartment	Freezing	-18 °C
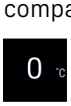 BioFresh		(see BioFresh B-Value*)

Setting the temperature

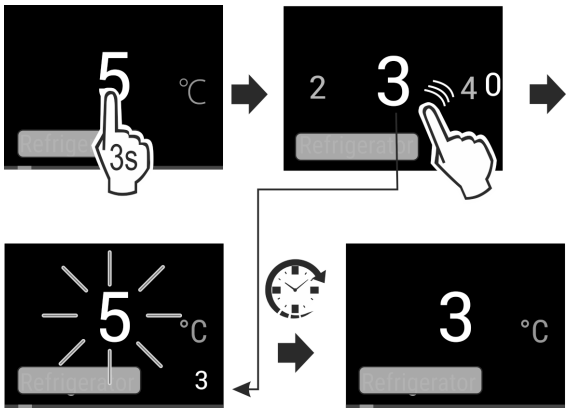

Fig. 10

▶ Set the value. (see 6.2 Operating logic) .
▷ The set temperature is shown on the bottom right of the display.

Switching off the temperature zone

You can switch off the fridge compartment separately.

If you switch off the freezing compartment, all temperature zones are switched off.

▶ Deactivate IceMaker. *
▶ Set the value. (see 6.2 Operating logic) .
▷  appears.

Setting the temperature in the BioFresh

You can set the temperature using the **BioFresh B-Value** in the customer menu. (see BioFresh B-Value*)

SuperCool

Select this function for the maximum cooling setting, to reach lower cooling temperatures.

This function is relevant to the fridge section *Fig. 1 (A)*

Use:

- Cool large amounts of food quickly.

Activating/deactivating settings

▶ Using the fridge section: activate the function when you add the goods.
▶ Activating/deactivating (see 6.2 Operating logic) .
-or-
▶ Activate/deactivate using the SmartDevice app.*

The function automatically turns off. The appliance goes back to normal mode. The temperature adjusts itself to the set level.

SuperFrost

Select this function for the maximum freezing setting, to reach lower freezing temperatures.

This function is relevant to the freezer section *Fig. 1 (C)*.

Use:

- To freeze more than 2 kg fresh food a day.
- Freezing fresh food quickly to the core.
- Increasing the cold reserves in the stored goods before defrosting the appliance.

Activating/deactivating settings

With a small volume of frozen goods:
▶ Activate 6 hours before use.
With the maximum volume of frozen goods:
▶ Activate 24 hours before use.
▶ Activating/deactivating (see 6.2 Operating logic) .
-or-
▶ Activate/deactivate using the SmartDevice app.*

The function automatically turns off. The appliance goes back to normal mode. The temperature adjusts itself to the set level.

PowerCool

This function provides the perfect blanket temperature to cool your food.

This function is relevant to the fridge section *Fig. 1 (A)*.

Use:

- For higher room temperatures (from approx. 35 °C)
- At high air moisture e.g. on summer days
- When storing moist goods, to avoid condensation building up inside

Activating/deactivating settings

▶ Activating/deactivating (see 6.2 Operating logic) .

Note
The fan can keep running even if the function has been deactivated. This ensures optimum temperature distribution in the appliance.

▷ Function activated: Energy consumption of the appliance is slightly increased.

PartyMode

This option offers an assortment of special functions and settings that are useful if you are having a party.

The following functions are activated:

- *SuperCool*
- *SuperFrost*
- *IceMaker* and *MaxIce**
- *InfinitySpring*
  *

You can set any functions you like. Your changes are lost when the option is switched off.

Activating/deactivating settings

▶ Activating/deactivating (see 6.2 Operating logic) .
▷ On: All functions are activated at the same time.
▷ Deactivated: Previously set temperatures are restored.

The function is automatically switched off after 24 hours.

HolidayMode

This function minimizes the energy consumption during an extended absence. The temperature of the refrigerator compartment is set to 15 °C and this is displayed on the status screen when the temperature has been reached.

The set freezer temperature remains unchanged.

This function is relevant to the fridge section *Fig. 1 (A)*.

Use:

- Save energy if you plan to be away for a while.
- Avoid coming home to bad smells and mold.

Activating/deactivating settings

▶ Empty everything from the fridge section.
▶ Activating/deactivating (see 6.2 Operating logic) .

▷ On: Fridge temperature is raised.
▷ Off: The previously set temperature is restored.

EnergySaver

This function reduces energy consumption. If you activate this function, the cooling temperature increases.

Temperature zone	Recommended setting	Temperature when EnergySaver activated
5 ℃ Fridge compartment	5 °C	7 °C
-18 ℃ Freezing compartment	-18 °C	-16 °C

Use:

- Save energy.

Activating/deactivating settings

▶ Activating/deactivating (see 6.2 Operating logic) .
▷ Activated: Higher temperatures are set in all temperature zones.
▷ Deactivated: Previously set temperatures are restored.

HydroBreeze*

HydroBreeze creates a fine mist in the drawer every 90 minutes for 4 seconds when the door is closed. This function is also activated when you open the door. The function is not activated when the appliance is delivered.

Use:

- For storing unpackaged salad, vegetables and fruit with high natural moisture levels.

  The following settings are possible:
  - 1: Function duration when the door is opened 4 s
  - 2: Function duration when the door is opened 6 s
  - 3: Function duration when the door is opened 8 s
  - Off: HydroBreeze is deactivated.

Activating/deactivating settings

▶ Activating/deactivating (see 6.2 Operating logic) .
-or-
▶ Activating/deactivating in the Liebherr SmartDevice-App.*

IceMaker / MaxIce*

This function activates the production of ice cubes.*

The function refers to the freezer compartment *Fig. 1 (C)*.*

Use:*

- If this function is activated, you can decide between the normal IceMaker function and MaxIce.
- The MaxIce makes approx. 1.5 kg of ice cubes per 24 h within a short time.

The ice cube size can be set with the **ice cube size** function. (see Ice cubes*) *

The lines can be cleaned with the **TubeClean** function. (see TubeClean*) *

Activating the function*

Make sure that the following requirements are fulfilled:

❑ The water supply is established at the fixed water connection. See Assembly Manual.*
❑ IceMaker is put into operation.

▶ Activate the function. (see 6.2 Operating logic)
-or-
▶ Activate via the Liebherr SmartDevice-App.

▷ It can take up to 24 hours for the first ice cubes to be made.

Deactivating the function*

▶ Deactivate the function. (see 6.2 Operating logic)
-or-
▶ Deactivate the function via the Liebherr SmartDevice-App.*

▷ If ice cubes are currently being made, the system completes the process. After that, the IceMaker switches off.

VarioTemp

This function allows you to use the freezing compartment *Fig. 1 (C)* as a variable temperature zone. You can set the temperature from -2 °C to 14 °C.

Liebherr recommends:

- Using the freezing compartment at temperatures between 4 °C and 9 °C to store food such as pre-prepared meals, cheese or preserves.
- Using the freezing compartment at 0 °C to store packaged fruit and vegetables.
- Using the freezing compartment at -2 °C to store fresh fish and seafood.
- Using the freezing compartment at temperatures between 10 °C and 14 °C to store foodstuffs sensitive to low temperatures, such as sweet potato, squash or tropical fruit, as well as any food or beverages that should not be too cold when consumed.

Activating/deactivating the function

▶ Activating/deactivating (see 6.2 Operating logic) .
▷ *VarioTemp* function is active/inactive.

Setting the temperature

▶ Select the optimum temperature depending on the application.
▶ Set the value (see 6.2 Operating logic) .
▷ The temperature slowly adjusts to the set value.

WARNING
Danger of food poisoning!
▶ Do not re-freeze defrosted food.

▶ Use defrosted food as quickly as possible.

Cleaning the IceMaker*

When you switch on *VarioTemp*, you have to clean the IceMaker.
▶ Clean the IceMaker using the *TubeClean* function (see 8.5.8 Cleaning the IceMaker*) .

Cleaning the EasyTwist-Ice*

When you switch on *VarioTemp*, you have to clean EasyTwist-Ice.
▶ Clean EasyTwist-Ice by hand (see 8.5.7 Cleaning the EasyTwist-Ice*) .

6.4 Settings

Language

This setting lets you choose the language of the display.

Choose from the following languages:

- German
- English
- French
- Spanish
- Italian
- Dutch
- Czech
- Polish
- Portuguese
- Russian
- Chinese

Activating/deactivating settings

▶ Activating/deactivating (see 6.2 Operating logic) .

Setting up the WLAN connection

This setting connects the appliance to the internet. The connection is managed in the SmartDevice Box. You can use the SmartDevice-App to add your appliance to a SmartHome-System. Use the SmartDevice-App or other compatible partner networks to enjoy advanced options and settings.

Note

The SmartDevice Box is available from the Liebherr Residential Appliances Store (https://home.liebherr.com/shop/de/deu/smartdevicebox.html).

More information about the availability, prerequisites and individual options can be found on the Internet at https://smartdevice.liebherr.com/install.

Use:

- Manage the appliance with the SmartDevice-App or a compatible partner network.
- Enjoy advanced functions and settings.
- Check the appliance status on the SmartDevice-App.

❑ Purchase the SmartDevice Box and insert it (see https://smartdevice.liebherr.com/install).*
❑ Install the SmartDevice app (see https://apps.home.liebherr.com/).

Setting up the WLAN connection

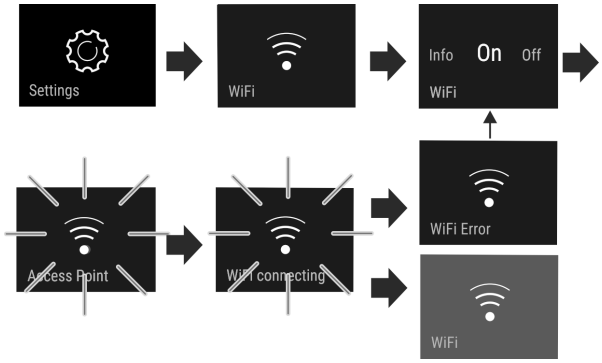

Fig. 11

▶ Activate (see 6.2 Operating logic) .

▷ The connection is set up: Connecting appears. The symbol flashes.
▷ The connection is set up: WiFi appears, the display turns blue.
▷ The connection failed: WiFi Error appears.

Disconnecting

▶ Deactivate the setting (see 6.2 Operating logic) .

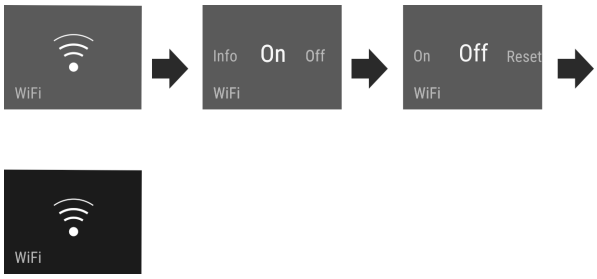

Fig. 12

▷ There is no connection: The symbol is displayed constantly.

Restoring the connection

▶ Restore settings (see 6.2 Operating logic) .

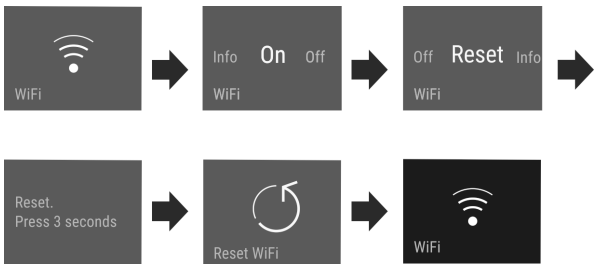

Fig. 13

▷ Connection and other settings are restored to factory settings.

Entry lock

This setting avoids accidental operation of the appliance, e.g. by children.

Use:

- Avoid unintentional changing of settings and functions.
- Avoid unintentional switching off of the appliance.
- Avoid unintentional temperature adjustments.

Activating/deactivating settings

▶ Activating/deactivating (see 6.2 Operating logic) .



Display brightness

With this setting, you can choose a brightness level for the display.

You can set the following brightness levels:

- 40%
- 60%
- 80%
- 100%

Choosing the setting

▶ Set the level (see 6.2 Operating logic) .

Door alarm

Set the time before the door alarm (see Close the door) sounds.

Options are as follows:

- 1 min
- 2 min
- 3 min
- Off

Choosing the setting

▶ Set the level (see 6.5 Error messages) .

Temperature unit

This setting allows you to change between Celsius and Fahrenheit as the temperature unit.

Selecting the setting value

▶ Set the value (see 6.2 Operating logic) .

Info

This setting allows the appliance information to be read out as well as access to the customer menu.

It provides the following information:

- Model name
- Index
- Serial number
- Service number

View appliance data

▶ Swipe in the display until Settings appears.
▶ Confirm the display.
▶ Swipe in the display until About appears.
▶ Read the appliance data.

SabbathMode

This setting meets the religious requirements on the Sabbath and Jewish festivals. Turn on SabbathMode to switch off certain controls. This means you can use the appliance without anyone changing any settings.

You can find a list of Star-K-certified appliances at www.star-k.org/appliances.

WARNING
Danger of food poisoning!
If there is a power outage when SabbathMode is on, this message is not saved. When the power is restored, the appliance continues in SabbathMode. Afterwards, the temperature display does not show a message about the power outage.
If there was a power outage during SabbathMode:
▶ Check the quality of the food. Do not consume spoiled food!

What the appliance does in SabbathMode:

- The Status display continuously shows SabbathMode.
- The display is locked for all functions apart from deactivating SabbathMode.
- Any functions/settings that are already on, remain active.
- The display stays bright when the door is closed.
- Reminders are disabled. The set timer interval is also stopped. The function is no longer executed in SabbathMode.
- Reminders and warnings are not displayed. No acoustic signals are emitted and the display does not show warnings / settings such as temperature alarm or door alarm.
- IceMaker is out of use.*
- InfinitySpring is out of use.*
- The internal light is off.
- The defrost cycle only works for the specified time without taking account of fridge use.
- After a power cut the appliance automatically returns to SabbathMode.

Activating/deactivating SabbathMode

▶ To activate this function, swipe the display until you reach Settings and press for 1 second. The menu shows the available settings.
▶ Swipe the display until the symbol for SabbathMode (Menora) appears. Press the symbol for 3 seconds.
▷ The display changes color.
▷ SabbathMode has been activated.

To deactivate the function, press the display for 3 seconds.

SabbathMode has been deactivated.

CleaningMode

This setting makes it easy to clean the appliance.

This setting is relevant to the fridge section *Fig. 1 (A)*.

Use:

- Clean the fridge section manually.
- Clean the InfinitySpring.*

What happens with the appliance when this setting is on:

- The display shows CleaningMode permanently.
- The refrigerator compartment is switched off.
- The internal light is on.
- Reminders and warnings are not shown. There is no acoustic signal.
- InfinitySpring is out of use.*

Activating/deactivating settings

▶ Activate/deactivate setting (see 6.2 Operating logic) .
▷ On: Fridge compartment is switched off. Light stays on.
▷ Off: preset temperature is restored.

The setting is automatically deactivated after 60 minutes. Then the appliance continues operation in normal mode.

TubeClean*

This setting cleans the IceMaker pipes.*

Make sure that the following requirements are met:*

❑ IceMaker cleaning process is ready (see 8.5.8 Cleaning the IceMaker*) .

Activate setting*

▶ Activate the setting in the customer menu (see 6.2 Operating logic) .
▷ TubeClean is prepared (max. 60 min.): The symbol flashes.
▷ Water pipes are rinsed: Symbol flashes.

▷ Rinsing process is complete: Function turns off automatically.

5 Ice cubes*

With this setting, you can choose the ice cube size.*

Choosing the setting*

▶ Make your settings in the Customer menu (see 6.2 Operating logic) .

B5 BioFresh B-Value*

In the delivery condition of the appliance, the value is set to **B5**. The status indicator on the display shows the appropriate target temperature in the BioFresh.

You can change this value slightly if a higher or lower ambient temperature makes it necessary. When setting the value, note:

Value	Description
B1	Lowest temperature
B1-B4	The temperature can drop to below 0 °C, so food can freeze easily.
B5	Default temperature
B9	Highest temperature

BioFresh B-Value

Choosing the setting

▶ Make your settings in the Customer menu (see 6.2 Operating logic) .

D1 D-Value

The *D-Value* is preset for your appliance and may not be changed.

Reminder

Reminders are displayed acoustically by a beep and visually by a symbol in the display. The signal gets louder until the alert stops.

Replace the FreshAir active carbon filter

This message appears when the air filter needs replacing.
▶ Replace the air filter every six months.
▶ Confirm the message with OK.
▷ The service interval resets.
▷ The air filter guarantees the air quality in the fridge.

Activate setting

▶ Activating/deactivating (see 6.2 Operating logic) .

Turn off appliance

This setting turns off the whole appliance.

Switch off whole appliance

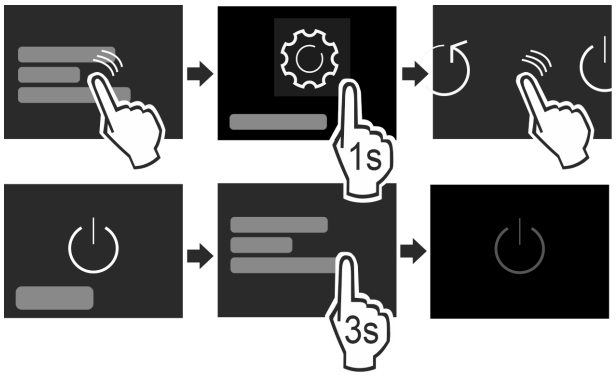

Fig. 14

▶ Turning off the IceMaker .*
▶ Activating/deactivating (see 6.2 Operating logic) .
▷ Off: Display turns black.

6.5 Error messages

Error messages appear in the display. There are two categories of error message:

Category	Meaning
Message	Reminder of general procedures. You can carry out these procedures to eliminate the message.
Warning	Appears when there are malfunctions. A signal sounds in addition to the display. The signal becomes louder until you acknowledge by tapping the display. You can eliminate simple defects yourself. For more serious defects, you must contact customer service.

6.5.1 Warnings

Close the door

This message appears if the door is open too long.

You can set the time before this message appears .
▶ Stop alarm: Confirm the message.
-or-
▶ Close the door.

Power failure.

This message appears if the freezer temperature rises after a power outage. When the power outage is over, the appliance will continue to operate at the last temperature setting.
▶ Stop alarm: Confirm the message.
▷ Temperature alarm appears (see Temperature alarm) .

Temperature alarm

This message appears if the freezer temperature does not match the set temperature.

Temperature differences may be caused by:
- Hot fresh food was placed in the appliance.
- When sorting and removing food from the appliance, too much warm ambient air got in.
- There has been a prolonged power outage.
- The appliance is faulty.

When the cause is eliminated, the appliance will continue to operate at the last temperature setting.
▶ Confirm the display.

▷ Warmest temperature is displayed.
▶ Confirm the display again.
▷ The status display is displayed.
▷ Current temperature is displayed.

Error

This message appears when there is a fault with the appliance. An appliance component has an error.
▶ Open the door.
▶ Take note of the error code.
▶ Confirm the message.
▷ The signal tone stops.
▷ The status display appears.
▶ Close the door.
▶ Contact customer service. (see 9.4 Customer service)

6.5.2 Message

Insert IceMaker drawer*

This message appears if the IceMaker drawer is open.
▶ Push in the IceMaker drawer.
▷ The message disappears.
▷ The IceMaker produces ice cubes.

6.5.3 DemoMode

If “D” appears in the display, demo mode is on. This feature is designed for retailers. The cooling features are disabled.

Switching off DemoMode

When you see a time counting down:
▶ Confirm within the countdown.
▷ DemoMode is off.

If there is no countdown:
▶ Disconnect the power plug.
▶ Reconnect the power plug.
▷ DemoMode is off.

7 Equipment

7.1 Door racks

7.1.1 Moving/removing door racks

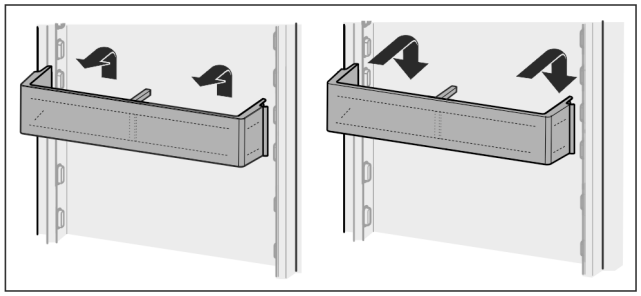

Fig. 15
▶ Slide racks up.
▶ Pull to the front.
▶ Re-insert in reverse order.

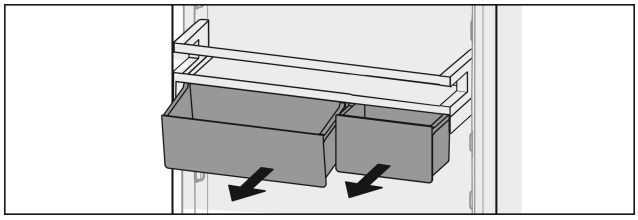

Fig. 16

You can use just one or both VarioBoxes. To store oversized bottles, suspend just one box over the bottle rack.

Move the VarioBox shelf:

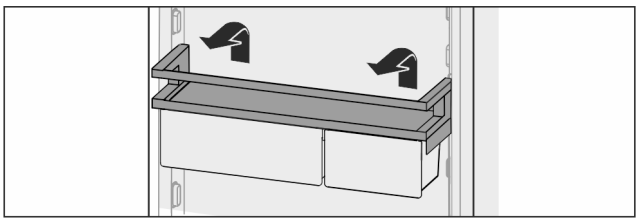

Fig. 17
▶ Pull up and out.
▶ Replace at any position.

Moving the VarioBoxes:

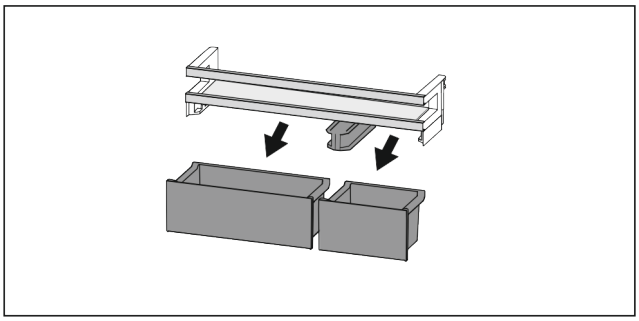

Fig. 18

If the door rack is removed:
▶ Remove boxes.

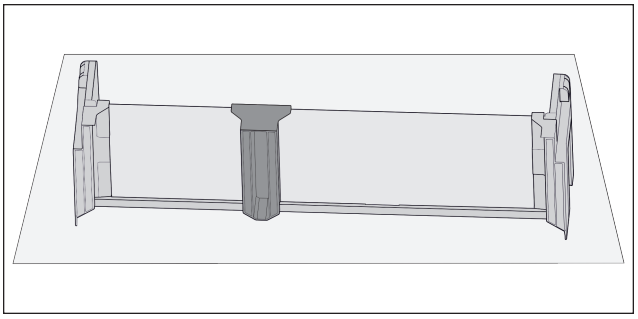

Fig. 19
▶ Place the shelf on the table.

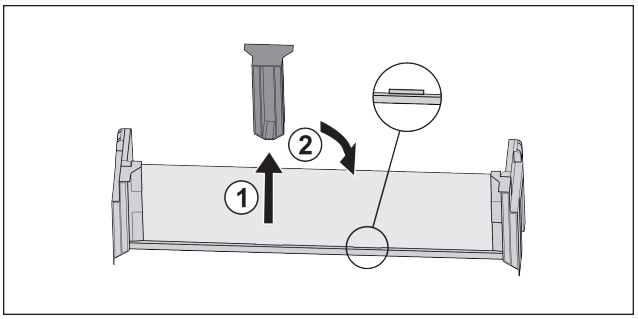

Fig. 20
▶ Pull off the middle holder *Fig. 20 (1)*.
▶ Insert the middle holder in the second position *Fig. 20 (2)*.

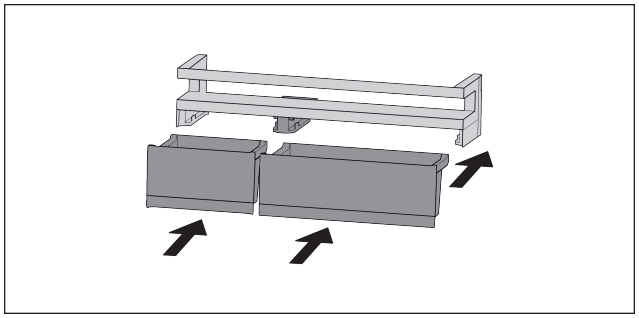

Fig. 21

▶ Replacing boxes.

7.1.2 To dismantle door racks

The door racks can be disassembled for cleaning.

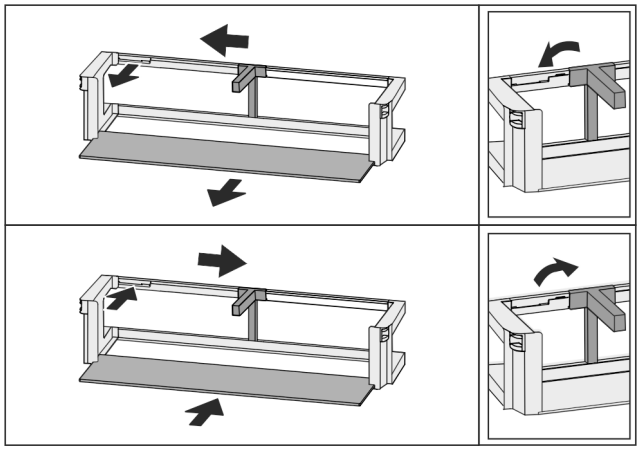

Fig. 22

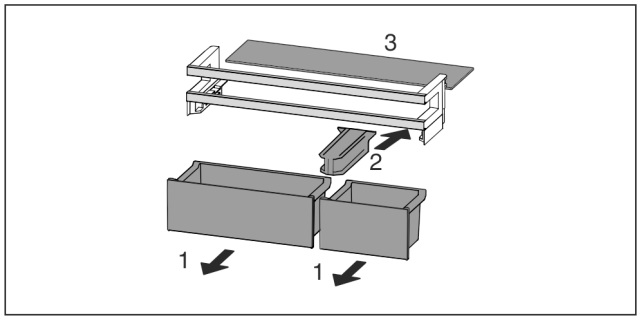

Fig. 23

▶ Disassemble the door racks.

7.2 Split shelf

7.2.1 Using the split shelf

Extension stops secure the shelves against being accidentally pulled out

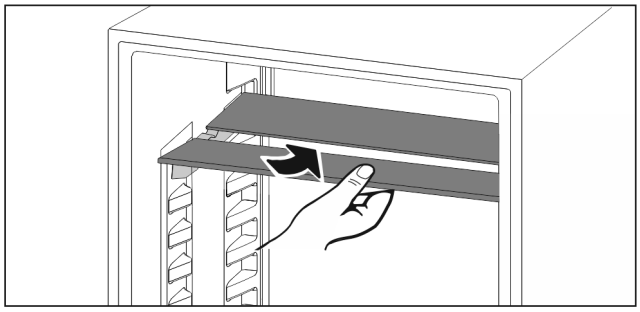

Fig. 24

▶ Push the split shelf underneath as in the illustration

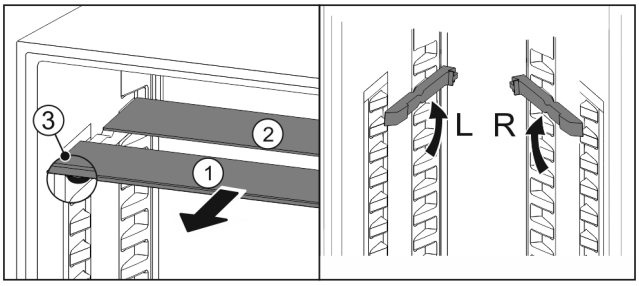

Fig. 25

Adjusting heights:

▶ Pull the glass panels out *Fig. 25 (1)* from the front, one at a time.

▶ Pull the support rails out of their retainers and snap into place at the height you want them.

▶ Slide in the glass panels one at a time.

▷ Flat pull-out stoppers at the front, right behind the support rail.

▷ Taller pull-out stoppers at the back.

Using both shelves:

▶ Hold the bottom glass panel with one hand and pull it to the front.

▷ The glass panel *Fig. 25 (1)* with the trim strip is at the front.

▷ The stops *Fig. 25 (3)* point downward.

7.3 VarioSafe

The VarioSafe provides space for small food, packs, tubes, and jars.

7.3.1 Using the VarioSafe

You can remove the drawer and slide it back in at two different heights. This is to accommodate taller small items in the drawer.

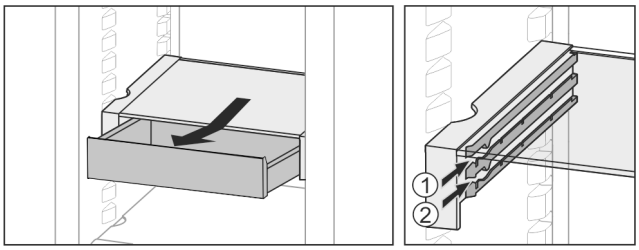

Fig. 26

▶ Remove the drawer.

▶ Slide in at any height *Fig. 26 (1)* or *Fig. 26 (2)*.

7.3.2 Moving the VarioSafe

You can shift the height of the entire VarioSafe unit.

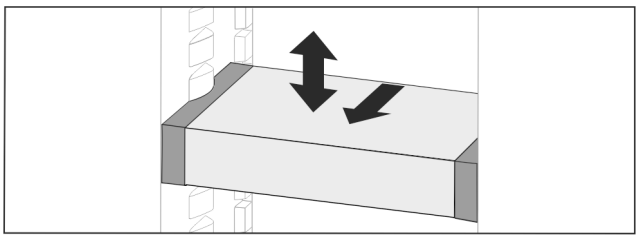

Fig. 27

▶ Pull to the front.

▷ Side recess to shelf position.

▶ Raise or lower to any height.

▶ Slide to the rear.

7.3.3 Removing the VarioSafe completely

You can remove the entire VarioSafe unit.

▶ Pull to the front.
▷ Side recess to shelf position.

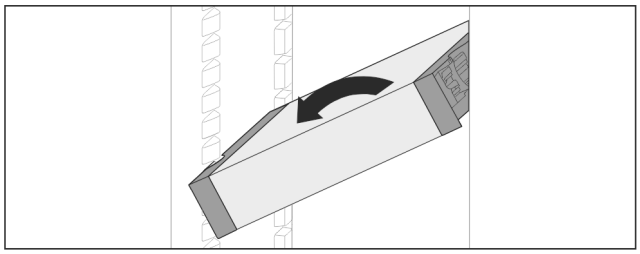

Fig. 28

▶ Tilt and pull to the front.

7.3.4 Disassembling the VarioSafe

The VarioSafe can be dismantled for cleaning.

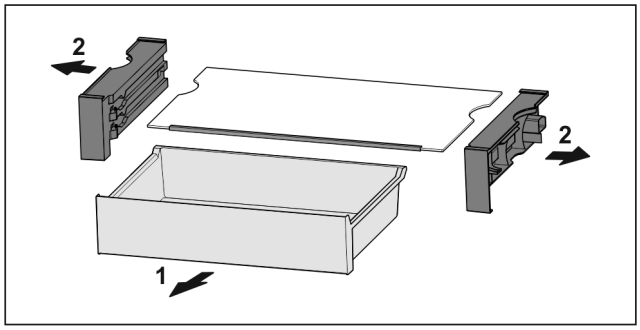

Fig. 29

▶ Dismantling the VarioSafe.

InfinitySpring

The built-in water dispenser provides convenient drinking water. The water temperature depends on the temperature in the fridge.

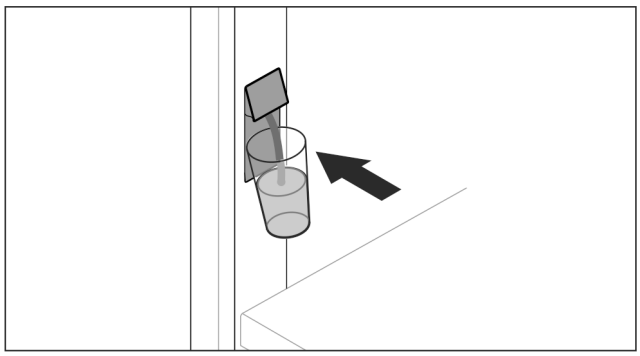

Fig. 30

▶ Push the glass against the button pushbutton of the dispenser.
▷ The outlet unit moves out: water pours into the glass.
▶ Avoid splashes: Remove the glass slowly.
If dispensing larger quantities of water:
▶ If the water flow stops, remove the water tank and push your container against the button push button of the dispenser again.

7.5 Variable bottle shelf

7.5.1 Using the bottle shelf

Use the variable bottle shelf or the glass panel placed on the fridge floor.

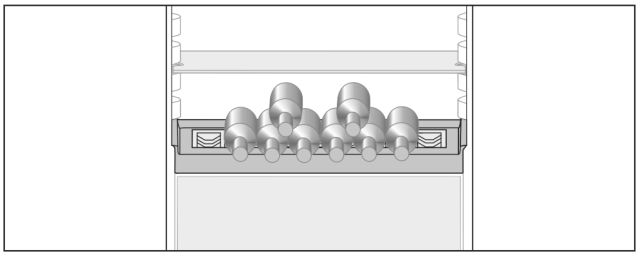

Fig. 31

▶ Remove the glass shelf and store separately.
▶ Place the bottles with the base pointing backwards facing the rear wall

Note
If the bottles protrude over the front of the bottle shelf:
▶ Move the bottom door rack higher up.

7.5.2 Removing the bottle shelf

You can remove the bottle shelf for cleaning.
▶ Remove the glass panel above the bottle shelf.

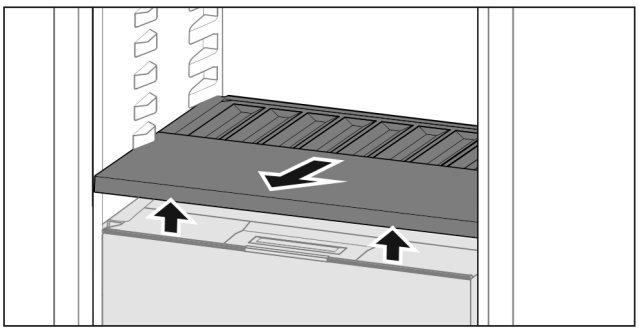

Fig. 32

▶ Lift the bottle shelf at the front and pull out.

Note
Liebherr recommends the following:
Do not place any goods on the drawer cover below.

7.5.3 Inserting the bottle shelf

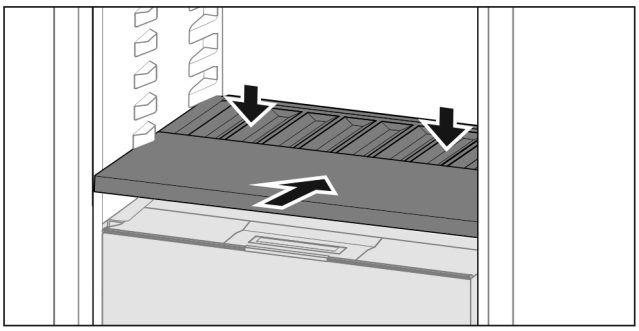

Fig. 33

▶ Slide in the bottle shelf until it engages and push down.
▷ The lugs at the back of the bottle shelf are connected automatically.
▷ LED lights up.

7.6 Drawers

You can remove the drawers for cleaning.

The shelves below can be used for storage until the drawers are replaced.

How the drawers are removed and inserted differs depending on the pull-out system. Your appliance can include a variety of pull-out systems.

Note
Insufficient ventilation results in an increase in energy consumption and reduction of the refrigerating performance.
▶ Leave the bottom drawer in appliance!
▶ Never obstruct the vents on the interior rear wall!

7.6.1 Remove the drawer

Drawer on telescopic rails

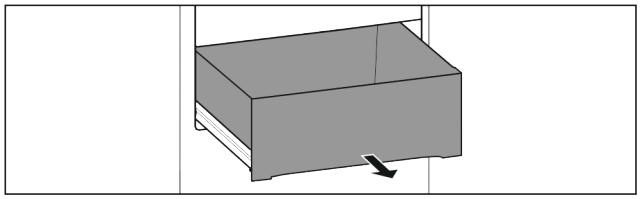

Fig. 34

Make sure that the following requirements are fulfilled:
❑ Drawer is completely pulled out (see Fig. 1809) .

Full extension:

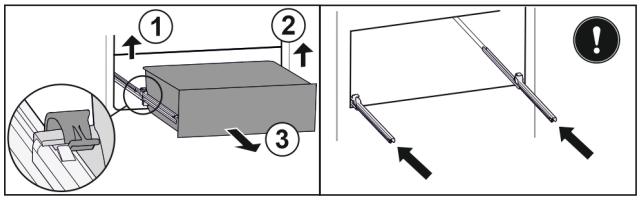

Fig. 35
▶ Lift the left clamp and simultaneously pull the drawer on the left to the front *Fig. 35 (1)*.
▶ Lift the right clamp and simultaneously pull the drawer on the right to the front *Fig. 35 (2)*.
▶ Remove the drawer to the front *Fig. 35 (3)*.
▶ Slide the rails in.

Partial pull-out freezing compartment*

Note
If the magnet on the top drawer in the freezing compartment is damaged or removed, the door sensor will malfunction.*
▶ Do not damage or remove the magnet.

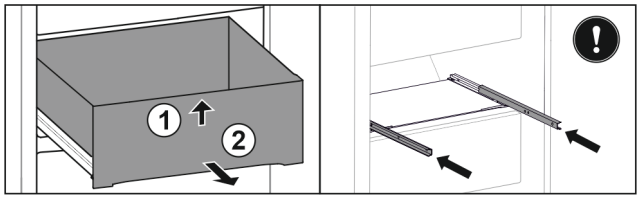

*Fig. 36 **
If the drawer is in the top of the freezing compartment:*
▶ Lift up the drawer at the front *Fig. 36 (1)*.*
▶ Remove to the front *Fig. 36 (2)*.*
▶ Slide the rails in.*

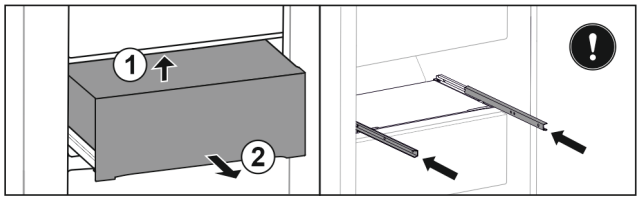

*Fig. 37 **
If the drawer is in the middle of the freezing compartment:*
▶ Pull out the drawer halfway.*
▶ Lift up at the back from below *Fig. 37 (1)*.*
▶ Remove to the front *Fig. 37 (2)*.*
▶ Slide the rails in.*

7.6.2 Inserting the drawer

Drawer on telescopic rails

Full extension:

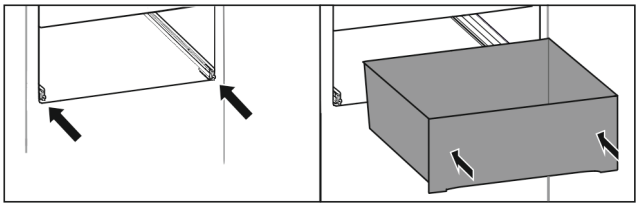

Fig. 38
▶ Slide the rails in.
▶ Place the drawer on the rails.
▶ Push all the way back.
▷ Full extension: Latches audibly in place at the back.

Partial pull-out freezing compartment*

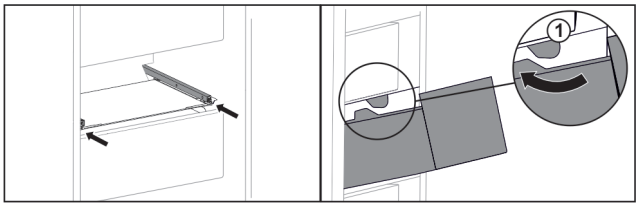

Fig. 39
▶ Slide the rails in.*
▶ Guide the drawer around the stoppers *Fig. 39 (1)*.*
▶ Place the drawer on the rails.*
▶ Push all the way back.*

7.7 Fruit & Vegetable-Safe cover

The compartment lid can be removed for cleaning.

7.7.1 Removing the compartment lid

Make sure that the following requirements are fulfilled
❑ Bottle shelf is removed (see 7.5 Variable bottle shelf) .

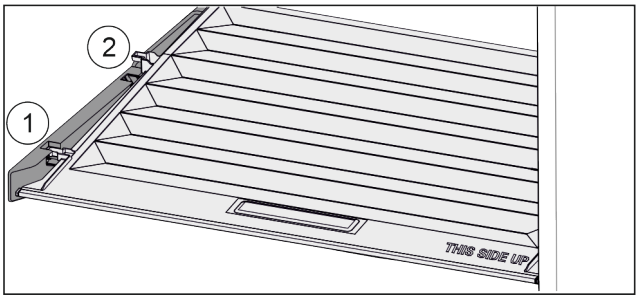

Fig. 40
If the drawers are removed:
▶ Pull the lid up at the front in the retaining parts to the opening *Fig. 40 (1)*.
▶ Lift from the back and pull it up and out *Fig. 40 (2)*.

7.7.2 Inserting the compartment lid

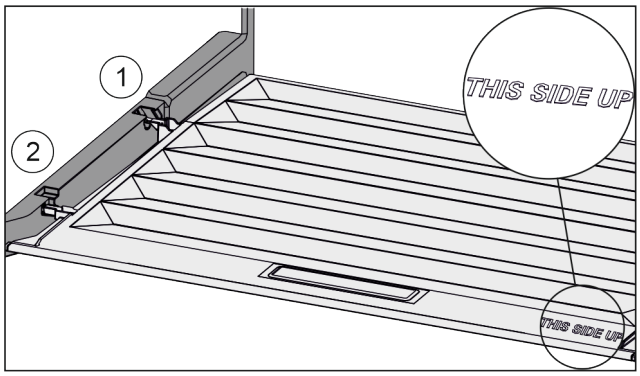

Fig. 41

If the text THIS SIDE UP is on top:

▶ Insert the lip of the cover over the opening of the rear bracket *Fig. 41 (1)* and click into place *Fig. 41 (2)*.
▶ Position the cover where you want it (see 7.8 Humidity control) .

7.8 Humidity control

You can regulate the moisture in the drawer yourself by adjusting the compartment cover.

The compartment cover is on the drawer itself and can be covered with shelves or additional drawers.

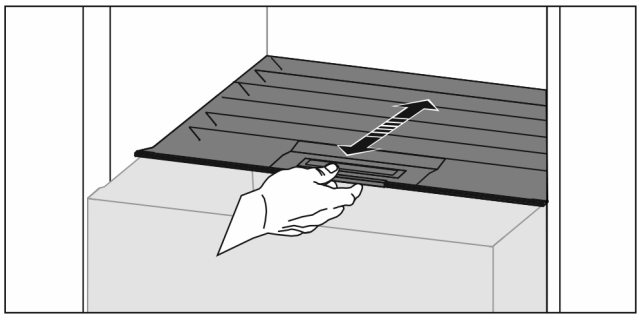

Fig. 42

Low air humidity

▶ Open the drawer.
▶ Pull the drawer cover to the front.
▷ If the drawer is closed: Gap between lid and compartment.
▶ Switch off HydroBreeze.*
▷ Moisture levels lower in the Safe.

High air moisture:

▶ Open the drawer.
▶ Slide the compartment cover to the back.
▷ If the drawer is closed: The cover seals the compartment.
▶ Activate the HydroBreeze.*
▷ Moisture levels rise in the Safe.

If there is too much moisture in the compartment:

▶ Choose a “low moisture setting”.

-or-

▶ Remove the moisture with a cloth.

Note

With the “low humidity” setting, the Fruit & Vegetable-Safe can also be used as a Meat & Dairy-Safe.

▶ Choose a “low moisture” setting.

HydroBreeze

HydroBreeze emits a mist over the refrigerated goods to provide moisture every time the door is opened.

The HydroBreeze and its water tank are located in the adjustable bottle shelf.

Make sure that the following requirements are fulfilled*

- The water tank is clean (see 8.5.4 Cleaning the equipment) .
- The water tank is properly engaged.
- Moisture is set to “high moisture” (see 7.8 Humidity control) .
- HydroBreeze is on (see HydroBreeze*) .

7.9.1 Fill the water tank

WARNING

Contaminated water!
Poisoning.

▶ Fill with drinking water only.
▶ HydroBreeze is off: Empty the water tank.
▶ HydroBreeze is out of use for a prolonged period: Empty the water tank.

NOTICE

Sugary liquids!
Damage to the HydroBreeze.

▶ Fill with drinking water only.

Note

Use filtered, decarbonized water to provide the best-quality drinking water and keep the HydroBreeze working smoothly. This water quality can be achieved using a table water filter of the kind available in trade retail outlets.

▶ Fill the water tank with filtered, decarbonized drinking water.

The water tank is built into the adjustable bottle shelf (see 1.2 Appliance and equipment overview) .

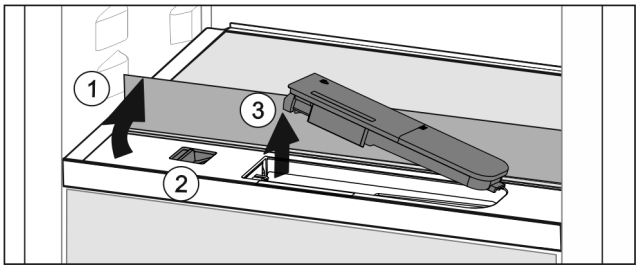

Fig. 43

▶ Press on the back-left corner of the front glass plate.
▷ The glass panel folds upwards.
▶ Lift the glass panel and fold to the back as far as it will go *Fig. 43 (1)*.
▷ The glass panel is upright.
▶ Slide the slider *Fig. 43 (2)* to the left.
▷ The water tank jumps out of its recess.
▶ Remove the water tank *Fig. 43 (3)*.
▶ Cleaning the water tank (see 8.5.4 Cleaning the equipment) .

Angular opening:

▶ Fill with drinking water up to the level mark.
▶ Insert the water tank, bottom first, into the recess.
▶ Slowly lower the front part and push the tank in.
▷ Water tank is engaged.

7.9.2 Disassembling the water tank

You can disassemble the water tank for cleaning.

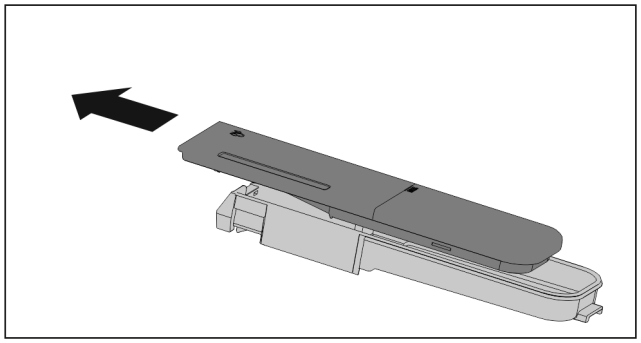

Fig. 44

▶ Disassemble the water tank.

EasyTwist-Ice

The EasyTwist-Ice produces ice cubes when the water tank is inserted.

The EasyTwist-Ice is used exclusively for the production of ice cubes in standard household quantities.

Note
Do not change the position of the EasyTwist-Ice.

Make sure that the following conditions are met:*

- The EasyTwist-Ice has been cleaned (see 8.5.7 Cleaning the EasyTwist-Ice*)
- The water tank has been cleaned.
- The EasyTwist-Ice drawer is fully inserted.

7.10.1 Filling the water tank

WARNING
Contaminated water!
Poisoning.
▶ Fill with potable water only.

NOTICE
Sugary liquids!
Damage to the EasyTwist-Ice.
▶ Fill with cold drinking water only.

Note
Using filtered, decarbonized water ensures the best-tasting drinking water for your ice cubes.
This water quality can be achieved using a table water filter of the kind available in trade retail outlets.
▶ Always fill the water tank only with filtered, decarbonized drinking water.

The water for the EasyTwist-Ice is supplied from a water tank.

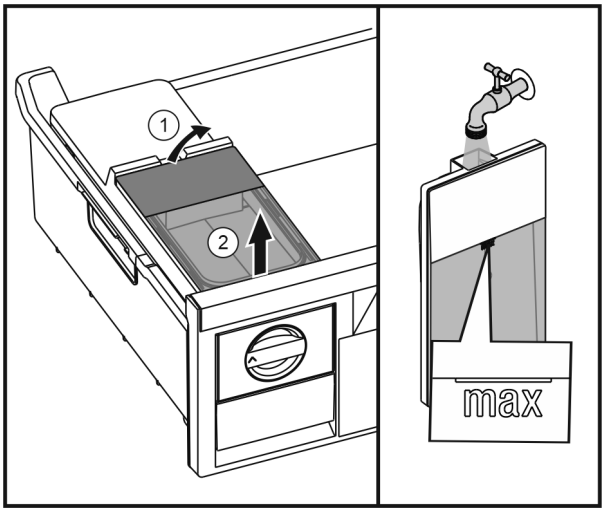

Fig. 45

▶ Lift up the water tank at the rear *Fig. 45 (1)* and take it out upwards *Fig. 45 (2)*.
▶ Fill with drinking water up to the mark.
▶ Insert the water tank by reversing the steps described above.

7.10.2 Producing ice cubes

The production capacity depends on the freezer temperature. The lower the temperature, the more ice cubes that can be produced in a certain period.

Maximum capacity of the ice cube drawer – 40 cubes (2x ice cube production).

Time required for ice cube production – at least 5 hours.

Releasing the ice cubes
▶ Turn the knob to the right to its stop limit.
▶ If necessary, repeat several times and turn the knob a little more.

7.11 VarioSpace

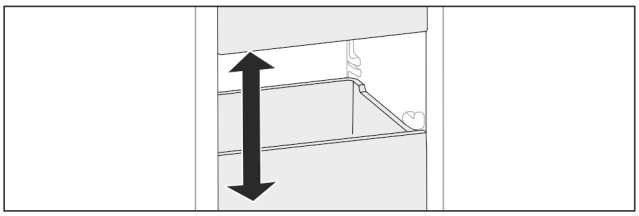

Fig. 46

You can remove drawers and glass panels from your appliance. This provides more room for large food items such as poultry, joints of meat, large game and bulky baked goods. You can then freeze these items whole for later preparation.
▶ Note the load limits on the drawers and glass panels (see 9.1 Technical specifications) .

7.12 Accessories

7.12.1 Butter dish

Opening/closing the butter dish

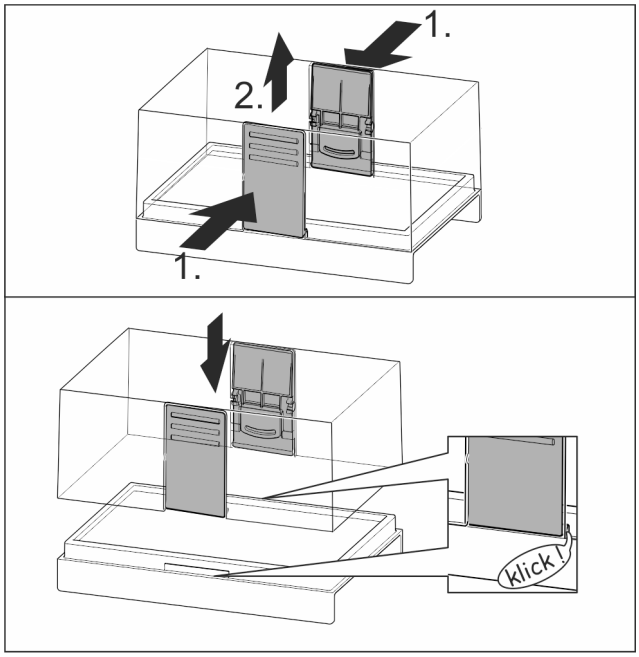

Fig. 47

Dismantling the butter dish

You can disassemble the butter dish for cleaning.

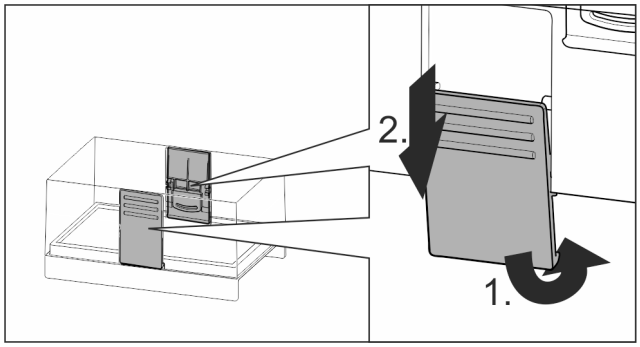

Fig. 48

▶ Disassemble the butter dish.

7.12.2 Egg rack

You can pull out and turn the egg rack. You can use both sides of the egg rack so you can label specifics like the purchase date.

Using the egg rack

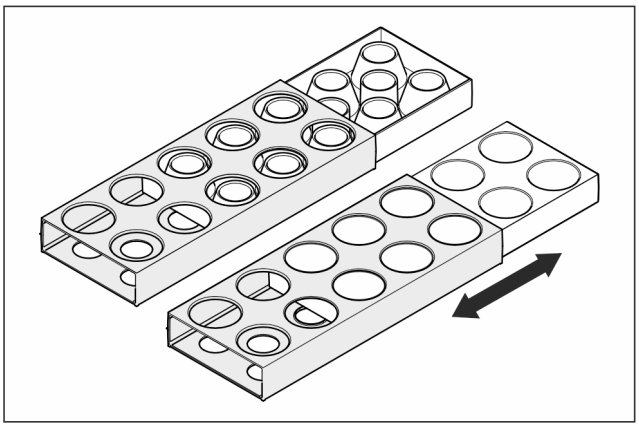

Fig. 49

▶ Top section: store hen eggs.
▶ Bottom section: store quail eggs.

7.12.3 Bottle rack

Using the bottle rack

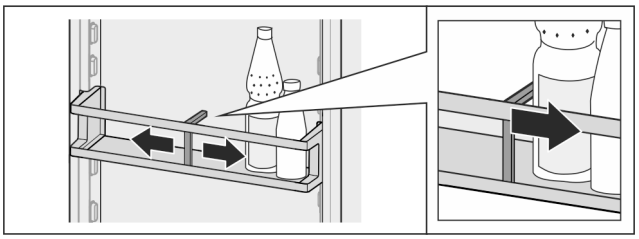

Fig. 50

▶ Slide the bottle rack at the edges.
▷ Stops bottles from tipping over.

Removing the bottle rack

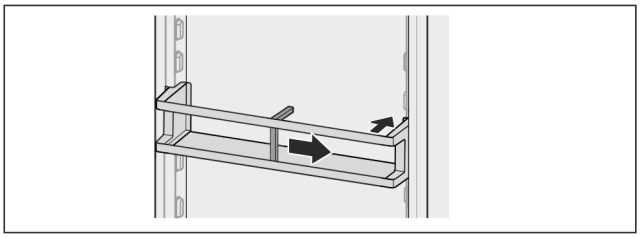

Fig. 51

▶ Slide the bottle rack all the way to the right edge.
▶ Remove to the back.

FlexSystem

Using the FlexSystem*

The FlexSystem helps you store and arrange food clearly and in the way you want. It lets you clearly divide your food into fruit, vegetables or by use-by dates, for example.

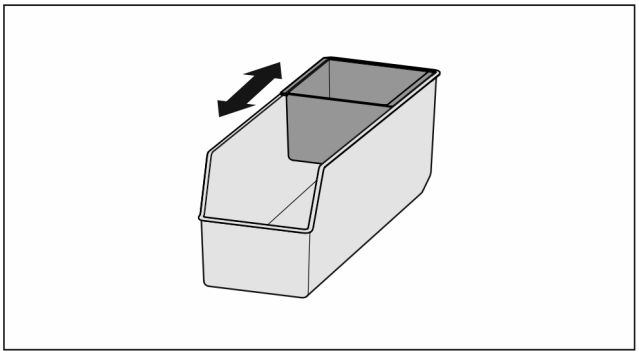

Fig. 52

▶ Move the inside tray.

*** Depending on model and options**

Removing the FlexSystem

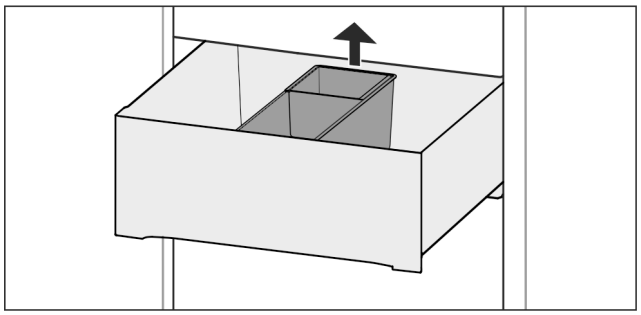

Fig. 53

▶ Lift the FlexSystem at the back.
▶ Pull up and out.

Inserting the FlexSystem

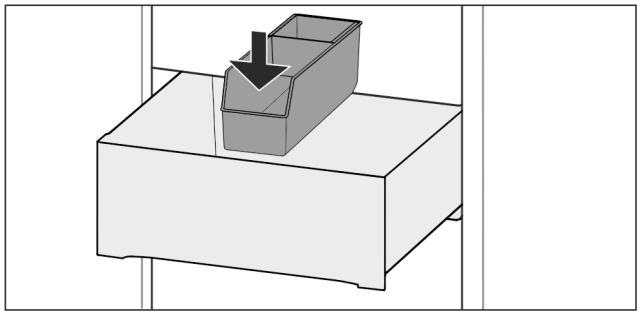

Fig. 54

▶ Insert front of the FlexSystem first.
▶ Lower the back part.

Disassembling the FlexSystem

The FlexSystem can be dismantled for cleaning.

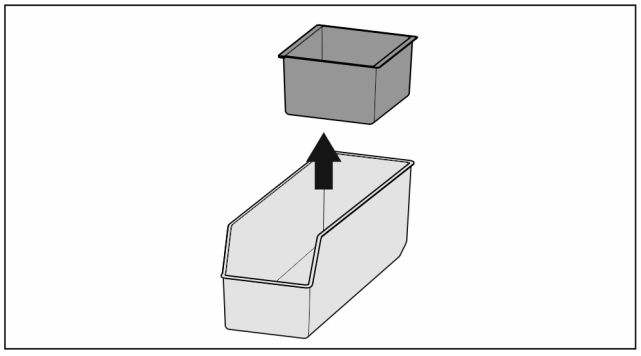

Fig. 55

▶ Dismantling the FlexSystem.

7.12.5 Freezer packs

The freezer packs prevent the temperature from rising too fast in the event of a power failure.

The freezer packs are in the drawer.

Using the freezer packs

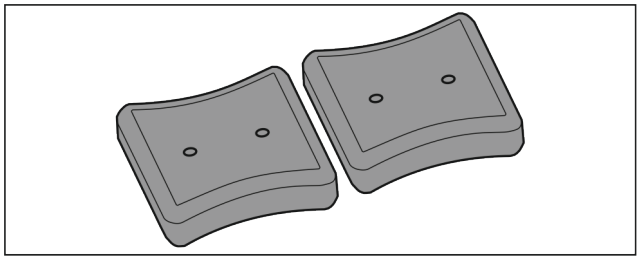

Fig. 56

When the freezer packs are fully frozen:

▶ Place on the frozen goods in the top, front part of the freezer.

7.12.6 Ice cube tray with lid*

Using the ice cube tray

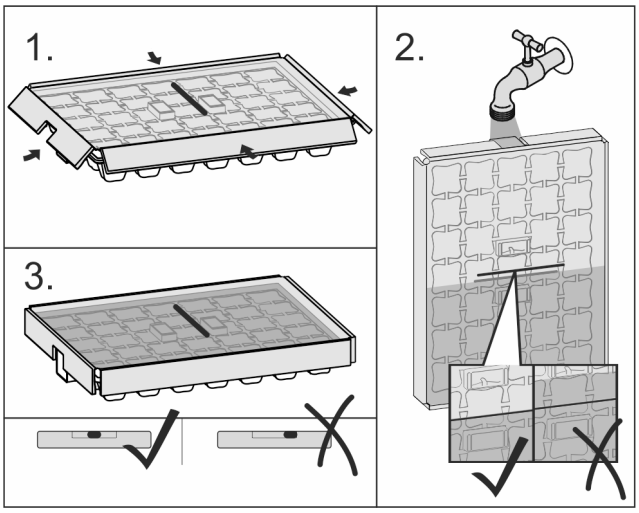

Fig. 57

When water is frozen:

▶ Hold the ice cube tray briefly under warm water.
▶ Remove the lid.
▶ Gently turn the ends of the ice cube tray in opposite directions.
▶ Release the ice cubes.

Dismantling the ice cube tray

You can dismantle the ice cube tray for cleaning.

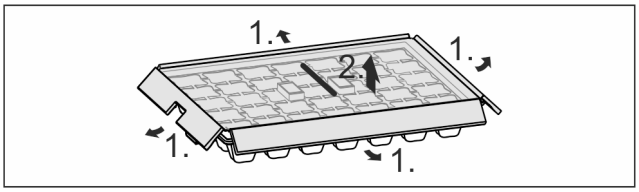

Fig. 58

▶ Disassemble the ice cube tray.

7.12.7 Flexible ice compartment divider*

Using the flexible ice compartment divider

Appliances with an IceMaker have a large ice cube tray with a movable divider so that food can be stored on the other side if necessary.

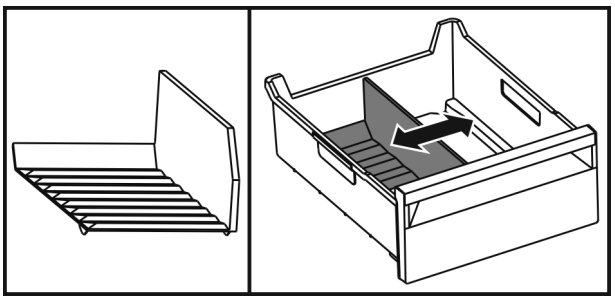

Fig. 59

▶ Move the divider.

Removing the flexible ice compartment divider

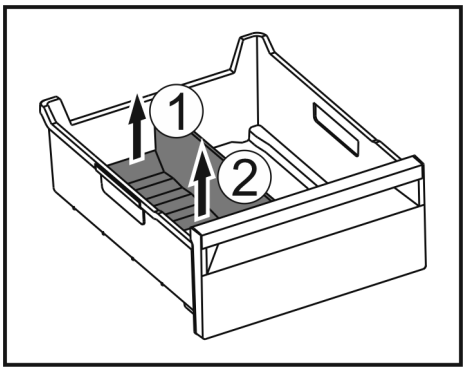

▶ Lift the back of the divider *Fig. 59 (1)*.
▶ Lift it up and out *Fig. 59 (2)*.

Putting in the flexible ice compartment divider

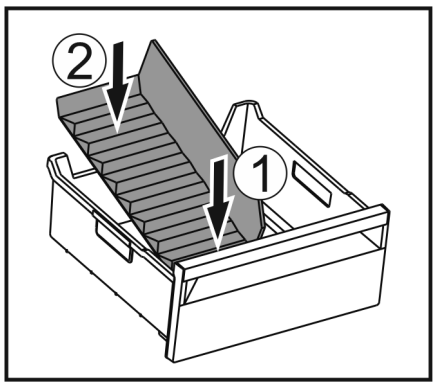

Fig. 60

▶ Put in the divider at the front at first *Fig. 60 (1)*.
▶ Lower the rear part *Fig. 60 (2)*.

8 Maintenance

8.1 FreshAir carbon filter

The FreshAir carbon filter is located in the compartment above the fan.

It guarantees the best air quality.

❑ Change the carbon filter every 6 months.
With an active *Reminder*, a change prompt appears in the display.
❑ You can dispose of the carbon filter with the regular household waste.

Note
The FreshAir carbon filter is available for purchase from the Liebherr home appliance store (home.liebherr.com).

8.1.1 Removing the FreshAir carbon filter

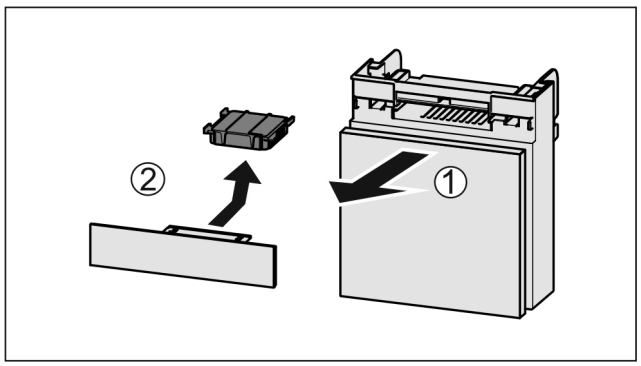

Fig. 61

▶ Pull out the compartment *Fig. 61 (1)*.
▶ Remove the carbon filter *Fig. 61 (2)*.

8.1.2 Inserting the FreshAir carbon filter

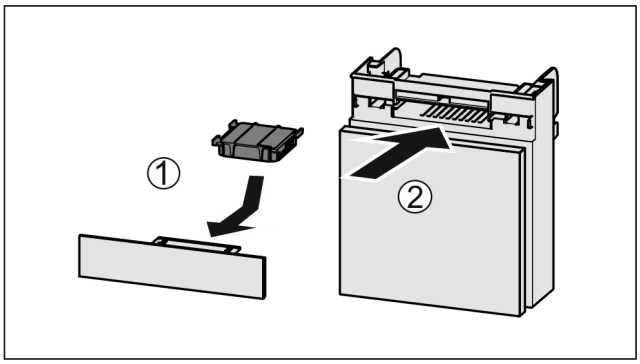

Fig. 62

▶ Insert the carbon filter as shown in the diagram *Fig. 62 (1)*.
▷ The carbon filter clicks into place.
If the carbon filter is pointing downwards:
▶ Push the compartment in *Fig. 62 (2)*.
▷ The carbon filter is now ready for use.

8.2 Water tank*

The InfinitySpring is located behind the lowest drawer in the fridge section.

8.2.1 Removing the water tank

▶ Turn off the water tap.
▶ Run the InfinitySpring for 30 seconds and collect the remaining water in a glass.
▶ Remove the drawer.
▶ Turn the water tank all the way to the left and pull it out.
▷ Water dripping out is collected in the drip tray.
▶ Drain the water from the drip tray.
▶ Clean the drip tray with a cloth or in the dishwasher.

8.2.2 Inserting the water tank

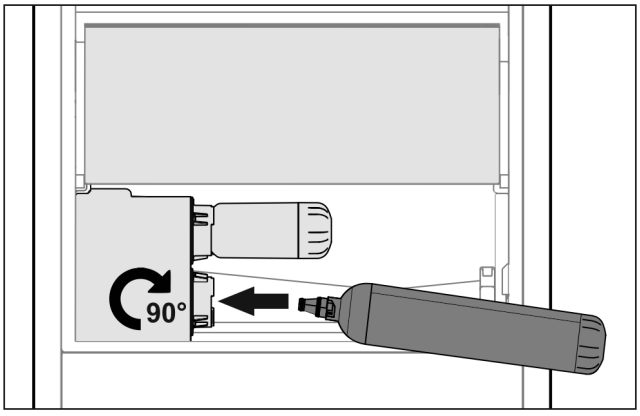

Fig. 63

▶ Remove the drawer.
▶ Insert the water tank and turn approx. 90° to the right until it engages.
▶ Check that the water tank is sealed and no water leaks out.
▶ Insert the drawer.
▶ Turn on the water tap.
▶ Vent the water system (see Installation Instructions, Water Connection)

Instead of the water filter, you can use an additional water tank.

Note
The water tank is available as a spare part.

8.2.3 Removing / inserting the drip tray

You can remove the drip tray for cleaning.

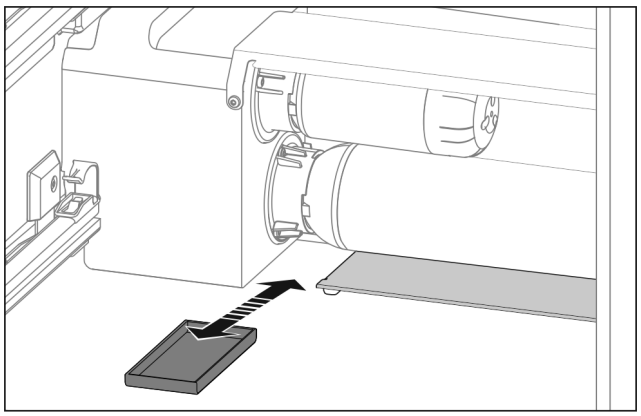

Fig. 64

▶ Pull out the drip tray to the front.

8.3 Water filter*

The water filter is located behind the lowest drawer in the fridge section.

It absorbs deposits in the water and reduces the taste of chlorine.

❑ Replace the water filter at least every 6 months under the specified usage conditions or if the flow rate drops significantly.
❑ The water filter contains carbon and can be disposed of with the regular household waste.

Note
You can purchase the water filter from the Liebherr household appliance store (home.liebherr.com).

8.3.1 Removing the water filter

▶ Remove the drawer.
▶ Turn the water filter all the way counterclockwise and pull it out.
▷ Water dripping out is collected in the drip tray.
▶ Clean the drip tray with a cloth or in the dishwasher.

8.3.2 Installing the water filter

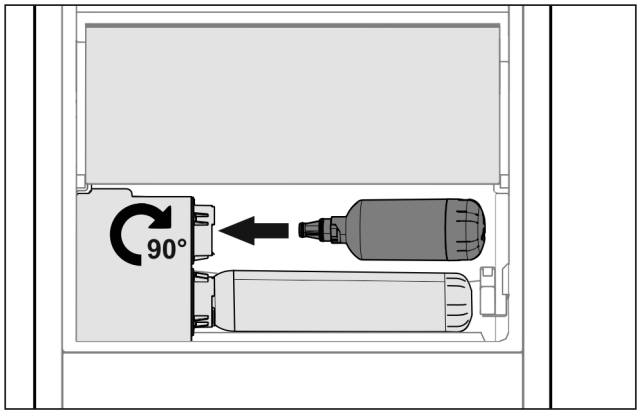

Fig. 65

▶ Remove the drawer.
▶ Insert the water filter and turn clockwise approx. 90° until it engages.
▶ Make sure the filter does not leak and no water is coming out.
▶ Insert the drawer.

CAUTION
New water filters may contain particulate matter.
▶ Dispense 3 l of water through the InfinitySpring and pour away.

▷ The water filter is now ready for use.

8.4 Defrosting the appliance

8.4.1 Defrosting the refrigerator compartment

Defrosting is performed automatically. The water from the thawing process runs out via the drain opening and is evaporated.
▶ Clean the drain opening regularly (see 8.5 Cleaning the appliance) .

8.4.2 Defrosting the freezer compartment with NoFrost

Defrosting is performed automatically by the NoFrost system. The moisture condenses on the evaporator and is periodically defrosted and evaporated.

The appliance does not have to be defrosted.

8.5 Cleaning the appliance

8.5.1 Preparation

WARNING
Danger of electric shock.
▶ Unplug refrigerator or disconnect power.

WARNING
Danger of fire
▶ Do not damage the refrigerant circuit.

▶ Empty appliance.
▶ Pull out the power plug.
-or-
▶ Activate CleaningMode. (see CleaningMode)

8.5.2 Cleaning the housing

NOTICE
Improper cleaning!
Damage to the appliance.
▶ Only use soft cleaning cloths and ph-neutral all-purpose cleaners.
▶ Do not use steel wool or sponges that scour or scratch.
▶ Do not use caustic or abrasive cleaning materials or those containing sand, chloride, or acids.

WARNING
Risk of injury or damage due to hot steam.
Hot steam can cause scalding/burns and damage to surfaces.
▶ Do not use steam cleaners.

▶ Wipe the housing down with soft, clean cloth. If very dirty, use lukewarm water with a neutral cleaner. Glass surfaces can also be cleaned with glass cleaner.

8.5.3 Cleaning the interior

NOTICE
Improper cleaning!
Damage to the appliance.
▶ Only use soft cleaning cloths and ph-neutral all-purpose cleaners.
▶ Do not use steel wool or sponges that scour or scratch.
▶ Do not use caustic or abrasive cleaning materials or those containing sand, chloride, or acids.

▶ Plastic surfaces: clean by hand with a soft clean cloth, lukewarm water and a little detergent.
▶ Metal surfaces: clean by hand with a soft clean cloth, lukewarm water and a little detergent.
▶ Drain outlet *Fig. 1 (19)*: Remove any deposits with a thin item such as a cotton bud.

8.5.4 Cleaning the equipment

NOTICE
Improper cleaning!
Damage to the appliance.
▶ Only use soft cleaning cloths and ph-neutral all-purpose cleaners.
▶ Do not use steel wool or sponges that scour or scratch.
▶ Do not use caustic or abrasive cleaning materials or those containing sand, chloride, or acids.

Clean with a soft, clean cloth, lukewarm water and a little washing up liquid:

- VarioSafe
- Fruit & Vegetable-Safe cover
- Drawer
  Please note: Do not remove the magnet on the drawer. The magnet ensures that the IceMaker functions.*
- Divider in the IceMaker drawer*
- Variable bottle shelf
- FlexSystem
  *

Clean with a damp cloth:

- Retracting rails
  Please note: the grease in the tracks is there for lubrication purposes and must not be removed!

Clean in the dishwasher up to 60 °C:

- Door racks
- VarioBox
- Bottle rack
- Split shelf
- Holder for the split shelf
- HydroBreeze water tank and water tank lid*
- Drip tray*
- Egg rack
- Butter dish
- Ice cube tray*
- Ice cube scoop*

▶ Disassemble the equipment: see the relevant section.
▶ Clean the equipment.

8.5.5 Cleaning the InfinitySpring*

You can clean the InfinitySpring outlet and around it without disconnecting the appliance from the mains.

We recommend cleaning in the following situations:

❑ Initial commissioning
❑ If out of use for longer than 5 days.

▶ Press the bottom pushbutton of the dispenser.
▷ The outlet unit moves out.
▶ Clean the water outlet and around it with a soft, damp cloth, lukewarm water and a little washing up liquid.
▶ Release the bottom pushbutton.

8.5.6 Cleaning the HydroBreeze*

We recommend cleaning in the following situations:

❑ Initial commissioning
❑ HydroBreeze was off for longer than 48 hours.
❑ Refill the water tank.

Make sure that the following requirements are fulfilled

❑ HydroBreeze is off (see HydroBreeze*) .
❑ Water tank was removed and cleaned in the dishwasher.

▶ Wipe out the recess with a damp cloth.
▶ Insert the water tank.
▶ Activate the HydroBreeze.

8.5.7 Cleaning the EasyTwist-Ice*

Cleaning must be conducted in the following situations:

❑ Operating for the first time
❑ Non-use for longer than 48 hours
❑ When the appliance requires cleaning

When operating for the first time, longer periods of disuse and when the appliance requires cleaning

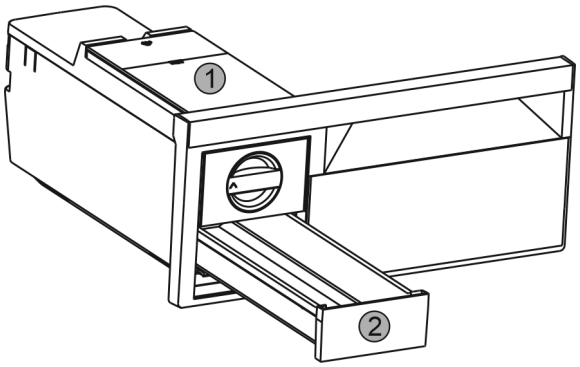

Fig. 66

▶ Take out the water tank *Fig. 66 (1)* and ice cube drawer *Fig. 66 (2)*.
▶ Take out the freezer drawer with EasyTwist-Ice.

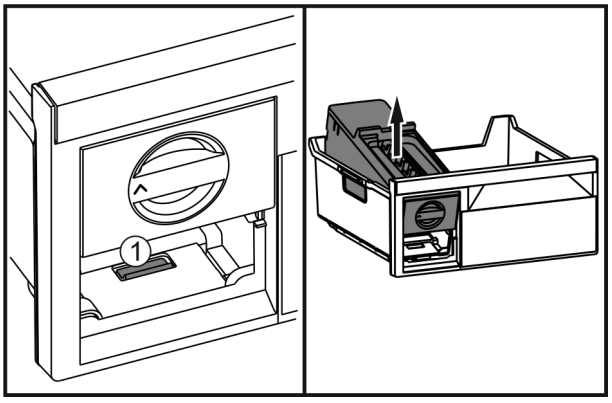

Fig. 67

▶ Press the lug *Fig. 67 (1)*, lift up the EasyTwist-Ice at the back and take it out of the freezer drawer.

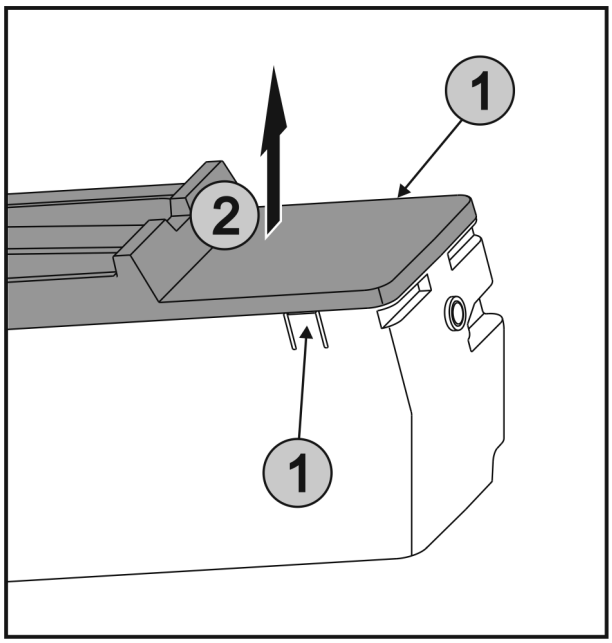

Fig. 68

▶ Press the lugs *Fig. 68 (1)* on both sides of the EasyTwist-Ice simultaneously and take off the cover *Fig. 68 (2)* upwards.

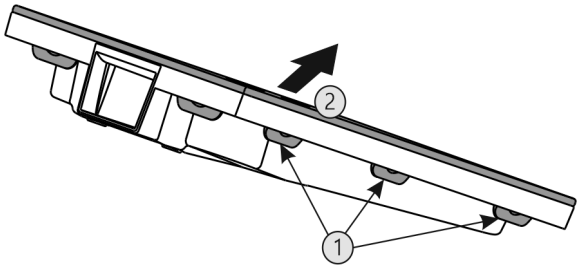

Fig. 69

▶ Press all lugs *Fig. 69 (1)* one after another and remove the cover *Fig. 69 (2)*.
▶ Clean the Ice cube drawer, water tank and EasyTwist-Ice with water and a little detergent.
▶ Assemble the EasyTwist-Ice.

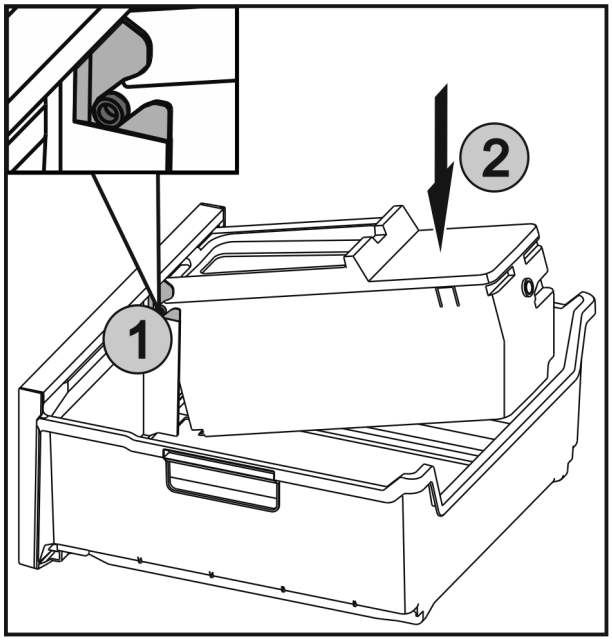

Fig. 70

▶ Insert the axles *Fig. 70 (1)* on the EasyTwist-Ice in the guides and push the rear side *Fig. 70 (2)* until the lug engages.
▶ Push in the EasyTwist-Ice drawer.

WARNING
Contaminated water!
Poisoning.
▶ Fill with potable water only.

▶ Fill the water tank and insert it. (see 7.10.1 Filling the water tank)

With unfiltered water:
▶ Dispose of ice cubes that were produced within 24 hours of the first ice cube production.

With filtered water:
▶ Dispose of ice cubes that were produced within 48 hours of the first ice cube production.

8.5.8 Cleaning the IceMaker*

There are various options for cleaning the IceMaker.

We recommend cleaning in the following situations:
❑ Initial commissioning
❑ If out of use for longer than 5 days.*

Make sure that the following requirements are met:
❑ IceMaker drawer is emptied.
❑ IceMaker drawer is fully inserted.
❑ The IceMaker has been activated. (see 6.2 Operating logic)

On first use or if not used for prolonged periods

Clean the IceMaker with TubeClean.
▶ Place a 1.5 l empty container (max. height 10 cm) in the drawer under the IceMaker.
▶ Activate the TubeClean function. (see 6.2 Operating logic)
▷ The rinse process is prepared (max. 60 min.): The symbol flashes.
▷ Water pipes are rinsed: Symbol flashes.
▷ Rinsing process is complete: Function turns off automatically.
▶ Take out the IceMaker drawer and remove the container.
▶ Clean the IceMaker drawer with warm water and a little detergent.
▶ Push in the IceMaker drawer.
▷ Ice cube production starts automatically.

Without water filter

With water filter:

When cleaning is required

Clean the IceMaker manually.
▶ Remove the IceMaker drawer and clean with warm water and a little detergent.
▶ Push in the IceMaker drawer.
▷ Ice cube production starts automatically.

8.5.9 After cleaning

▶ Wipe dry the appliance and items of equipment
▶ Connect and switch on the appliance.
▶ Activate SuperFrost (see 6.3 Functions) .
When the temperature is sufficiently cold
▶ Place the food inside.
▶ Repeat cleaning regularly.

9 Customer support

9.1 Technical specifications

Temperature zone	
Cool:	3 °C to 9 °C
BioFresh	0 °C to 3 °C
BioFresh Professional* (Fish & SeaFood)*	-2 °C to 0 °C* Options: 0 °C | 0 °C, 0 °C | -2 °C, -2 °C | -2 °C*
Freezing	-26 °C to -15 °C

Maximum freezing capacity / 24 hrs	
Freezer	See nameplate, “Freezing capacity ... /24h”

Max. equipment capacity			
Equipment	Appliance width 550 mm (see installation instructions, appliance dimensions)	Appliance width 600 mm (see installation instructions, appliance dimensions)	Appliance width 700 mm (see installation instructions, appliance dimensions)
Partial pull-out freezer compartment*	12 kg*	15 kg*	25 kg*

Ice cube production with IceMaker*	
Ice cube production / 24 h	At a temperature of -18 °C: 1.2 kg of ice cubes
Maximum ice cube production / 24 h	When the MaxIce function is active: 1.5 kg of ice cubes

Ice cube production with EasyTwist-Ice*	
Time required at -18 °C	approx. 5.5 h
Time required with SuperFrost activated	approx. 3 h

Time required to reach various temperatures with VarioTemp		
Initial temperature	Target temperature	Time required to reach target temperature
-18 °C	0 °C	>8 h
-18 °C	8 °C	>12 h
8 °C	14 °C	>6 h
14 °C	-18 °C	>4 h

Lighting	
Energy efficiency class[1]	Light source
This product contains an energy efficiency class G light source	LED

1 The appliance may contain light sources with different energy efficiency classes. The lowest energy efficiency class is indicated.

For appliances with a WiFi connection:*

Frequency specification*	
Frequency band	2.4 GHz
Maximum radiated power	<100 mW
Purpose of the wireless equipment	Integration in the local WiFi network for data communication

9.2 Operating noises

The appliance makes noises while in operation.

- At **less cooling output** the appliance saves energy but takes longer to cool items. The volume is **lower**.
- At **a higher cooling output** the food cools more quickly. The volume is **higher**.

  Examples:
  - Activated functions (see 6.3 Functions)
  - Running fan
  - Freshly sorted food
  - High ambient temperature
  - Door opened for long periods

Noise	Possible cause	Type of noise
Bubbling and splashing	Coolant is flowing into the cooling circuit.	Normal noise
Spitting and hissing	Coolant is spraying into the cooling circuit.	Normal noise
Humming	The appliance cools. The volume depends on the cooling output.	Normal noise
Sipping noises	The self-closing door is being opened and closed.	Normal noise
Whirring and murmuring	The fan is running.	Normal operating noise
Clicking	Components are being switched on and off.	Normal switching noise
Rattling or humming	Valves are active.	Normal switching noise

Noise	Possible cause	Type of noise	How to resolve
Vibration	Unsuitable setup	Error noise	Adjust the feet to make sure the appliance is horizontal.
Clattering	Equipment, Objects inside the appliance	Error noise	Secure equipment parts. Leave a gap between items.

9.3 Technical faults

Your appliance is designed and manufactured for reliable operation and a long service life. If a malfunction nonetheless occurs during operation, please check whether the malfunction is due to an operating error. In this case, you will have to be charged for the costs incurred, even during the warranty period.

You may be able to rectify the following faults yourself.

9.3.1 Appliance function

Defect	Cause	Remedy
The appliance does not work.	→ The appliance is not switched on.	▶ Switch on the appliance.
	→ The power plug is not properly inserted in the wall socket.	▶ Check the power plug.
	→ The powerfuse in the wall socket is not OK.	▶ Check the fuse.
	→ Power failure.	▶ Keep the appliance closed. ▶ Protect your food: Lay freezer packs on top of the food or use another freezer if the power is off for a prolonged period. ▶ Do not re-freeze defrosted food.
	→ The appliance connector is not correctly inserted in the appliance.	▶ Check the appliance connector.
The temperature is not cold enough	→ This means that the door of the appliance is not closed properly	▶ Close the appliance door
	→ Insufficient ventilation	▶ Clear and clean the ventilation grille.
	→ The ambient temperature is too high	▶ Solution: (see 1.3 Range of appliance use) .
	→ The appliance was opened too frequently or for too long	▶ Wait to see whether the required temperature resets itself by itself. If not, contact Customer Service (see 9.4 Customer service) .
	→ Too much fresh food was placed inside without SuperFrost.	▶ Solution: (see SuperFrost)
	→ The temperature is incorrectly set	▶ Set to a colder temperature and check after 24 hours.
	→ The appliance is too near to a heat source (stove, heater etc).	▶ Change location of appliance or the heat source.
The door seal is defective or should be replaced for other reasons.	→ The door seal is interchangeable. You can replace it without the use of any special tools.	▶ Contact Customer Service (see 9.4 Customer service) .
The appliance is iced up or condensation is building.	→ The door seal may have slipped out of its groove.	▶ Check the door seal is well placed in the groove.
The outside surfaces of the appliance are hot*.	→ The heat of the refrigerant circuit is used to prevent condensate from forming	▶ This is normal.

9.3.2 Equipment

Defect	Cause	Remedy
The IceMaker cannot be switched on.*	→ The appliance and therefore the IceMaker are not connected.	▶ Connect the appliance (see Installation Guide).
The IceMaker is not making any ice cubes.*	→ The IceMaker is not switched on.	▶ Activate the IceMaker.
	→ The drawer of the IceMaker is not properly closed	▶ Close the drawer properly
	→ The water connection is not open	▶ Open the water connection*

Defect	Cause	Remedy
The IceMaker is not working.*	→ There is air in the system.	▶ Vent the water system (see Installation Instructions, Water Connection).
The InfinitySpring is not working.*	→ The ice cube tray rotates.	▶ Tray again after 1 minute.*
	→ There is air in the system.	▶ Vent the water system (see Installation Instructions, Water Connection).
	→ The water connection is not open	▶ Open the water connection*
The water flow at the InfinitySpring is irregular.*	→ The aerator is not clean.	▶ Replace the aerator. Contact Customer Service (see 9.4 Customer service) .
HydroBreeze is not keeping refrigerated foods moist.*	→ HydroBreeze is not activated.	▶ Activate the HydroBreeze.
	→ There is not enough water in the water tank	▶ Fill the water tank.
	→ There is dirt upstream of the concentrator.	▶ Clean the HydroBreeze.
	→ The water tank is not properly locked into place.	▶ Make sure the water tank clicks in properly.
	→ The lid of the Fruit & Vegetable-Safe is set to “low air moisture”.	▶ Adjust the lid of the Fruit & Vegetable-Safe to “high air moisture”.
The interior light does not turn on.	→ The appliance is not switched on.	▶ Switch on the appliance.
	→ The door was open for longer than 15 min.	▶ The interior light automatically switches itself off if the door stays open for approx. 15 min.
	→ The LED interior light is faulty or the cover is damaged:	**WARNING** Risk of injury from electrical shock. Live parts are under the cover. ▶ The LED interior light should only be replaced or repaired by the Customer Service department or by engineers trained to do so.

9.4 Customer service

First check if you can fix the error yourself (see 9 Customer support) . If this is not the case, please contact customer service.

Please refer to the enclosed “Liebherr Service” brochure for the address.

WARNING
Unprofessional repair!
Injuries.
- ▶ Repairs and work on the appliance and the power supply cable not described in the Manual (see 8 Maintenance) should only be carried out by a qualified service provider.
- ▶ A damaged power cable may only be replaced by the manufacturer, the manufacturer’s Customer Service or a similarly qualified person.
- ▶ For appliances with an IEC connector, the change can be made by the customer.

9.4.1 Contact Customer Service

Make sure to have the following appliance information to hand:

- ❑ Appliance name (model and index)
- ❑ Service no. (service)
- ❑ Serial no. (S no.)

▶ Showing appliance info on the display (see Info) .
-or-
▶ Referring to appliance info on the nameplate (see 9.5 Rating plate) .

▶ Take note of the appliance information.
▶ Inform Customer Service: Tell us the problem and the appliance details.
▷ This will help us give you fast and accurate support.
▶ Further instructions from customer service will follow.

9.5 Rating plate

The nameplate is located behind the drawers on the inside of the appliance.

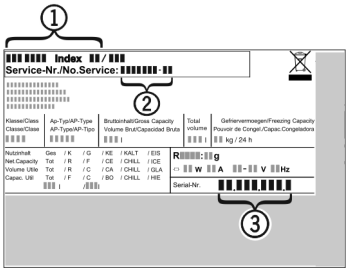

Fig. 71

(1) Appliance name
(2) Service no.
(3) Serial no.

▶ Information from the nameplate.

10 Decommissioning

- ▶ Empty appliance.
- ▶ Switch off the IceMaker .*
- ▶ Switch off the appliance (see 6.4 Settings) .
- ▶ Pull out the power plug.
- ▶ Remove the appliance connector if necessary: Pull it out and, at the same time, move it from the left to the right.
- ▶ Clean the appliance (see 8.5 Cleaning the appliance) .
- ▶ Leave the door open to prevent bad smells

11 Disposal

11.1 Preparing appliance for disposal



Liebherr uses batteries in some of its appliances. In the EU, for environmental reasons, legislation obliges the end user to remove these batteries before disposing of the old appliances. If your appliance contains batteries, a corresponding notice is attached to the appliance.

Lamps — If you can remove the lamps yourself without destroying them, also remove these before disposal.

- ▶ Take the appliance out of operation.
- ▶ Appliance with batteries: Remove the batteries. For description, see **Maintenance** chapter.
- ▶ If possible: Remove lamps without destroying them.

11.2 Disposing of the appliance in an environmentally friendly manner



The appliance still contains valuable materials and must be collected separately from unsorted municipal waste so it can be recycled.





Dispose of batteries separately from the old appliance. You can do this by returning the batteries free of charge to retailers or taking them to recycling centers and collection centers for recyclable materials.

Lamps — Dispose of removed lamps via the respective collection systems.

For Germany: — You can dispose of the appliance free of charge via the class 1 collection containers at the local recycling and recyclable material collection centers. When purchasing a new fridge/freezer, if the sales area > 400 m^2, retailers will also take back the old appliance free of charge.

WARNING
Leaking refrigerant and oil!
Fire. The refrigerant contained within the appliance is environmentally friendly, but flammable. The oil contained within the appliance is flammable. Escaping refrigerant and oil can ignite if they are of high enough concentration and are exposed to an external heat source.
- ▶ Do not damage the pipelines of the coolant circuit and the compressor.

- ▶ Transport the appliance away without damaging it.
- ▶ Dispose of batteries, lamps, and the appliance according to the above specifications.



home.liebherr.com/fridge-manuals

EN Combined fridge-freezer with BioFresh

Issue date: 20220726

Part number index: 7080476-00

Liebherr-Hausgeräte Marica EOOD
Bezirk Plovdiv
4202 Radinovo
Bulgarien