beko

Hood

User Manual

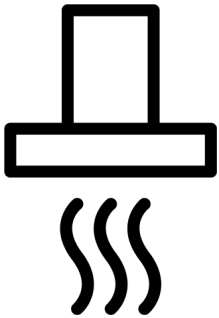

BHCA66641BBHS

185732057_1/ EN/ R.AA/ 23/12/2021 10:57
7704431206

CE

Table of Contents

1 Safety Instructions 4

1.1 General Safety 4
1.2 Electrical Safety 5
1.3 Product Safety 6
1.4 Intended Use 8
1.5 Child, Vulnerable Persons and Pet Safety 8
1.6 Transportation Safety 9

2 Environmental Instructions 9

2.1 Waste Directive 9
2.1.1 Compliance with the WEEE Directive and Disposing of the Waste Product 9
2.2 Package Information 9

3 Your product 10

3.1 Product Introduction 10
3.2 Product Accessories 10
3.3 Technical Specifications 12

4 Using the Hood 13

5 Maintenance and Cleaning 16

5.1 General Cleaning Information 16
5.2 Aluminium Filter 16
5.3 Hood Lamp 17
5.4 Carbon Filter (Usage without a flue) 17

6 Troubleshooting 17

Welcome!

Dear Customer,

Thank you for choosing the Beko product. We want your product, manufactured with high quality and technology, to offer you the best efficiency. Therefore, carefully read this manual and any other documentation provided before using the product.

Keep in mind all the information and warnings in the user's manual. This way, you will protect yourself and your product against the dangers that may occur.

Keep the user's manual. If you give the product to someone else, give the manual with it. The warranty conditions, usage and troubleshooting methods for your product are provided in this manual.

The symbols and their descriptions in the user's manual:



Hazard that may result in death or injury.



Important information or useful usage tips.



Read the user's manual.



Hot surface warning.

NOTICE Hazard that may result in material damage to the product or its environment.

Arçelik A.Ş.
Karaağaç caddesi No:2-6
34445 Sütlüce/Istanbul/TURKEY
Made in TURKEY

1 Safety Instructions

- This section includes the safety instructions necessary to prevent the risk of personal injury or material damage.
- If the product is handed over to someone else for personal use or second-hand use purposes, the user's manual, product labels and other relevant documents and parts should also be given.
- Our company shall not be held responsible for damages that may occur if these instructions are not observed.
- Failure to follow these instructions shall void any warranty.
- Always have the installation and repair works made by the manufacturer, the authorised service or a person that the importer company shall designate.
- Use original spare parts and accessories only.
- Do not repair or replace any component of the product unless it is clearly specified in the user's manual.
- Do not make technical modifications on the product.

1.1 General Safety

- This product can be used by children 8 years of age and older, and people who are underdeveloped in physical, sensory or mental skills, or who have lack of experience and knowledge, as long as they are supervised or trained about the safe use and hazards of the product. Children should not play with the appliance. Cleaning and user maintenance must not be made by children without supervision.
- **Poisoning Danger!** While the appliance is operating, air is drawn from the whole house. If adequate ventilation is not provided, air flow occurs and the waste and toxic gases released as a result of combustion in the house are reabsorbed. Do not operate the product together with products that provide air circulation and may emit toxic gas (wood, gas, oil and coal stoves, boilers, water heaters, etc.).

- Have the adequacy of your building's ventilation and flue system checked by authorized persons.
- This product is not intended for use by persons (including children) with limited physical, sensory or mental capacity or without knowledge or experience, unless supervised or instructed by the individual responsible for their safety. Children should be supervised to ensure that they do not play with the product. Cleaning and user maintenance must not be made by children without supervision.
- Installation and repair procedures must always be performed by **Authorised Service** Agents. The manufacturer cannot be held responsible for any damages that may arise due to operations made by unauthorized persons.
- Do not operate the product if it is defective or has any visible damage.
- Ensure that the product function knobs are switched off after every use.
- If the product is handed over to someone else for personal use or second-hand use purposes, the user's manual, product labels and other relevant documents and parts should also be given.
- Call the authorized service for the installation of the product to be used. The warranty term starts after this process.
- Product must be installed by a qualified person in accordance with the regulations in force for the warranty to be applicable.

⚠ 1.2 Electrical Safety

- To have your product ready for use, first provide the place of installation and have the electrical installation made. Then, call the nearest Authorised Service.
- If the product has a failure, it should not be operated unless it is repaired by an Authorised Service Agent. There is the risk of electric shock!
- Do not plug your hood in until it is mounted.
- If your product has plug, never touch the plug with wet hands! Never unplug by pulling on the cable, always pull out by holding the plug.

- The appliance power should be cut off during installation, maintenance, cleaning and repair processes.
- In order to prevent any hazard from occurring, in case of damage, the electrical cable must be replaced by the manufacturer, the manufacturer's service centre or a similar qualified person.
- If the cable is damaged, contact our nearest service centre and have a new one installed.
- If your product has plug, do not make electrical connections by disconnecting the plug during installation. Connections made by cutting off render the product warranty void and pose a danger to user safety.
- Do not install the mains cord near the heaters. The cable might melt, causing a fire.
- If your product does not have a cable, only use the connecting cable described in the "Technical specifications" section.
- Any work on electrical equipment and systems should only be carried out by authorised and qualified persons.
- In case of any damage, switch off the product and disconnect it from the mains. To do this, turn off the fuse at home.
- Make sure that fuse rating is compatible with the product.
- Never wash the appliance by spraying or pouring water on it! There is the risk of electric shock!

1.3 Product Safety

- Height between the bottom surface of your hood and the top surface of the oven should be no less than 650 mm for gas ovens and 500 mm for electrical ovens.
- (For Model C) In electrical ovens, the highest performance in the product is achieved by leaving a height of 550 mm.
- Do not touch the lamps of your hood after operating the hood for a long time. Hot lamps may burn your hand.
- Do not operate the appliance without an oil entrapment filter. Do not remove the filters while the appliance is operating.

- Do not create a high flame under the product. Otherwise, the oil in the oil trap filter may ignite, causing a fire.
- Run the product after placing the cooking pots, pans, etc. on the ovens. Otherwise, rising heat may deform some parts of your product.
- Turn off the oven before taking the cooking pots, pans, etc. from the ovens.
- Do not keep easily flammable materials under your hood.
- Do not expose the appliance to open flame. It may cause the oil accumulating in the filter to catch fire. Do not operate the appliance without a filter.
- Do not leave your cooker unattended while cooking fried foods, oils may catch fire while cooking, and hot oil may cause fire. Therefore pay attention to the clothes and curtains.
- If cleaning is not performed in a timely manner, the hood may present a risk of fire.
- (For Models A and B) Run your hood for another 15 minutes after the cooking or frying process to clean the kitchen air thoroughly of the odours and vapours generated during cooking.
- Adequate ventilation must be available in the room when gas or other fuel-burning appliances are used at the same time while the oven hood with a cooker is being used. (Not applicable for only the appliances that discharge air back into the room).
- Gas or fuel oil burning appliances, such as room heaters, which share the same environment with the hood, must be fully insulated from the exhaust of this product or they must be hermetical.
- If there is another appliance operating with fuel oil or gaseous fuels in the environment, adequate ventilation of the environment is required.
- If there is another appliance operating with energy other than electrical energy in the same environment with the hood, the negative pressure in the room should be at most 0.04 mbar so that the exhaust of the other appliance is not drawn back into the room by the hood.

- Do not connect to flues with heating stove connection, flues where waste gas is disposed from or flues with rising flames. Comply with local regulations on purging the outflow.
- Use pipes with a diameter of 120 mm when connecting a flue to your product. The pipe connection should be as short as possible and with few bends.
- Easily flammable and combustible materials should not be hung on the hood handles.
- Our company shall not be responsible for problems that arise for not observing any of the warnings above.
- There is a risk of fire if cleaning is not carried out in accordance with the instructions.
- There should not be open fire under the hood. (for example: flambe)
- **Caution:** Accessible parts can heat up when used with a cooker.
- It is recommended to clean the filter once a month under normal usage.

1.4 Intended Use

- This product is designed for home use. Commercial use will void the guarantee.
- The manufacturer assumes no responsibility for any damage due to misuse or mishandling.
- The service life of the product you have purchased is 10 years. Manufacturer shall provide the required spare parts for the product to perform as defined during this period.

1.5 Child, Vulnerable Persons and Pet Safety

- Keep children away from the product when it is running.
- Children should not play with the product. Cleaning and user maintenance should not be performed by children unless there is someone overseeing them.
- This product should not be used by people with limited physical, sensory or mental capacity (including children), unless they are kept under supervision or receive the necessary instructions.

- The packaging materials are dangerous for children. Keep the packaging materials out of the reach of children or sort them into waste according to waste instructions.
- Electrical products are dangerous for children and pets. Keep children away from the product while it is operated and do not let them play with the product.

⚠ 1.6 Transportation Safety

- Disconnect the product from the mains before transporting the product.
- Do not put other items on the product and carry the product upright.
- When you need to transport the product, wrap it with bubble wrap packaging material or thick cardboard and tape it tightly. Secure the product tightly with tape to prevent the removable or moving parts of the product and the product from getting damaged.
- Check the overall appearance of the product for any damage that may have occurred during transportation.

2 Environmental Instructions

2.1 Waste Directive

2.1.1 Compliance with the WEEE Directive and Disposing of the Waste Product

This product complies with EU WEEE Directive (2012/19/EU). This product bears a classification symbol for waste electrical and electronic equipment (WEEE).

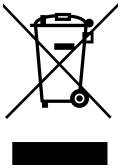

This product has been manufactured with high quality parts and materials which can be reused and are suitable for recycling. Therefore, do not dispose of the waste product with normal domestic and other wastes at the end of its service life. Take it to a collection point for the recycling of electrical and electronic equipment. You can ask your local administration about these collection points. Disposing of the appliance properly helps prevent negative consequences for the environment and human health.

Compliance with RoHS Directive:

The product you have purchased complies with EU RoHS Directive (2011/65/EU). It does not contain harmful and prohibited materials specified in the Directive.

2.2 Package Information

Packaging materials of the product are manufactured from recyclable materials in accordance with our National Environment Regulations. Do not dispose of the packaging waste with the household or other wastes, take them to the packaging material collection points designated by the local authorities.

3 Your product

3.1 Product Introduction

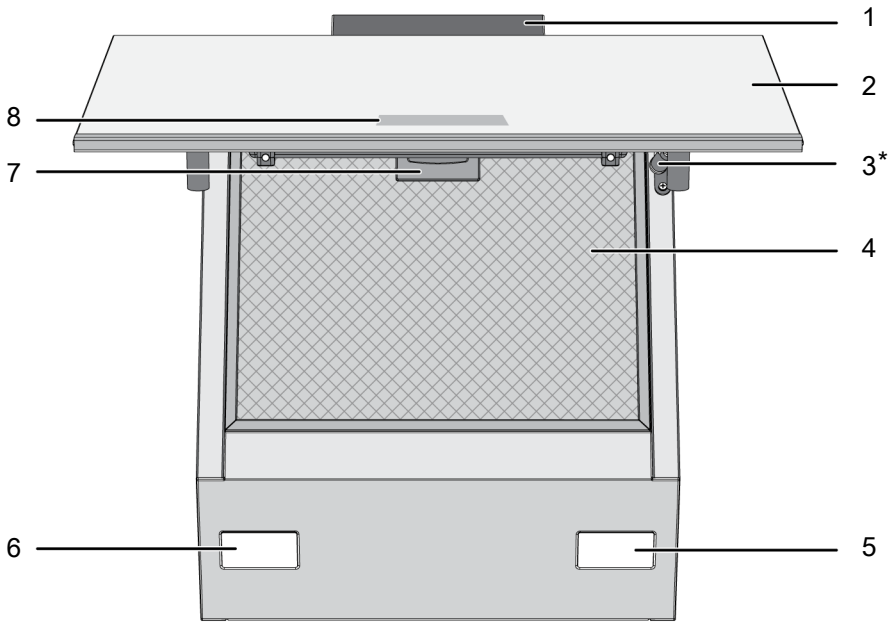

1 Hood body
2 Hood glass lid
3 Damper
4 Aluminium filter
5 Lamp
6 Lamp
7 Aluminium filter lock
8 Control panel

* Dependent on the model. It may not be available on your product.

3.2 Product Accessories

Depending on the product model, the supplied accessory varies. All accessories described in the user's manual may not be available in your product.

Wall mounting part

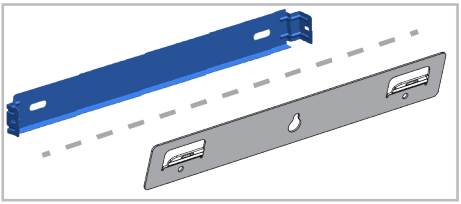

Air router

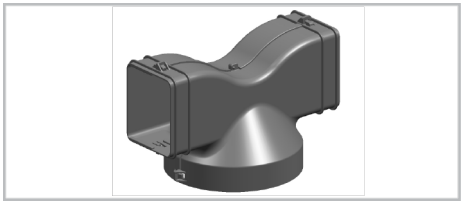

Covers to prevent reverse airflow

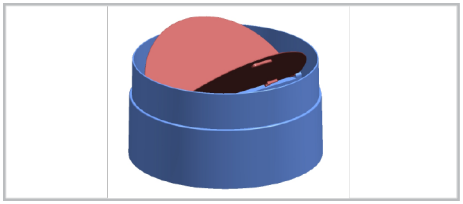

Flue connection adapter

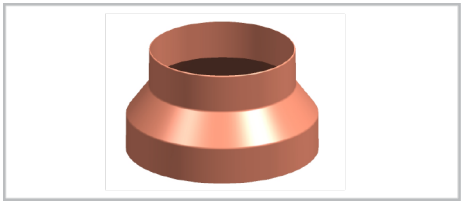

3.3 Technical Specifications

Product external dimensions (height/width/depth) (mm)	min. 910 - max. 1138 /595 /419
Voltage/Frequency	220-240 V ~1N; 50 Hz
Total power consumption	max. 300 W
Suction power	700-720 m3/h
Diameter of air outlet pipe	120-150 mm

Control	
Model A	3 levels
Model B	3 levels + 1 booster
Model C	3 levels + 1 booster

Technical specifications may be changed without prior notice to improve the quality of the product.

Figures in this manual are schematic and may not exactly match your product.

Values stated on the product labels or in the documentation accompanying it are obtained in laboratory conditions in accordance with relevant standards. Depending on operational and environmental conditions of the product, these values may vary.

4 Using the Hood

The hood has an engine with various speeds. For a good performance, we recommend using low speeds under normal conditions and high speeds in case of strong odour and vapour condensation.

The program is cancelled if power is cut when any programs in your hood are active.

MODEL A

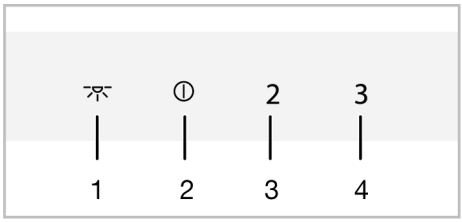

1 Lamp key
2 On-Off/Speed 1 key
3 Speed 2 key
4 Speed 3 key

MODEL B

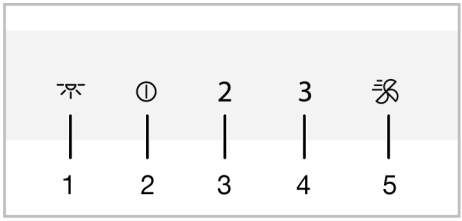

1 Lamp key
2 On-Off/Speed 1 key
3 Speed 2 key
4 Speed 3 key
5 Booster key

MODEL C

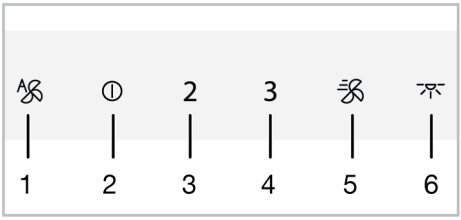

1 Automatic mode key
2 On-Off/Speed 1 key
3 Speed 2 key
4 Speed 3 key
5 Booster key
6 Lamp key

Operating the hood

a. Touch the speed level key you have selected to operate the hood.

   ⇨ The set speed level key lights up.

b. You can also touch the other speed level keys to change the speed level.

When in operation, the product will run for a maximum of 6 hours if no key is touched.

Turning off the hood

a. To turn the hood off, touch again the level key of the hood or ⏻ key.

If you touch the ⏻ key with any function active except the lamp, then the function is cancelled.

Turning on the intensive ventilation mode (Booster) (for models B and C)

a. Press key once to start the hood in the intensive ventilation mode.

⇨ The intensive ventilation mode starts up and runs for a maximum of 10 minutes. During this time, the key lights up. After 10 minutes, the key continues to operate in Speed 3 and the Speed 3 key lights up.

In intensive ventilation mode, when any speed key is touched, it returns to that speed level and continues to operate.

Operating the lamp

a. Touch the key to operate the lamp.

⇨ Hood lamp lights. (For Models B and C) If you touch the key again within the first 1 minute, the lamp will continue to light at a low illumination level. Touch it again 1 min after turning the lamp on and the lamp turns off.

The lighting lamps operate for a maximum of 12 hours.

Turning off the lamp

a. One minute after turning the hood lamp on, you can turn it off by touching the key again.

(For Models B and C) If you touch the key again within the first 1 minute after the lamp is switched on, the lamp switches to a low light level.

Setting the lamp light colour (for models B and C)

You can use the colour of your hood's lighting lamps in 3 different shades.

a. With the hood lamp turned on, touch key for more than 2 seconds.

⇨ The lamp changes to the other colour shade.

b. If you continue to touch key, it will change to the next colour shade after every 2 seconds. According to the desired colour shade, stop touching key when the lamp is in that colour shade. The colour shade will automatically activate.

You can only change the light colour shade while the lamp has high light intensity.

In the event of a power outage, your hood will remember the colour shade set and the lamp will work in the colour that was last set.

Automatic mode (for model C)

Your hood measures the temperature of the air in the kitchen and the air coming from your oven by using a sensor. In automatic mode, it determines the required levels for the temperature of the air from the oven to match the temperature of the air in the kitchen and operates at levels determined automatically.

a. To enable automatic mode touch the key.

⇨ The automatic mode is activated and operates until the temperature of the air from the heater equals the ambient temperature. The temperature will switch off automatically when it equalizes. You must enable automatic mode again to re-switch it on.

While automatic mode is active, automatic mode will be cancelled when you turn the product on and off at any speed.

b. To turn automatic mode off early touch the key once more.

If you open the cover of the product when auto mode is on, its performance will decrease. Do not open the cover while the automatic mode is active.

If the ambient temperature difference occurs even when the hood is not operating while the automatic mode is active, the temperature sensor in the product will detect the difference and the product may start operating at Speed 2 or 3 depending on the difference. In this case, automatic mode will be turned off when the temperature difference is equalized.

Do not use automatic mode when your hood is not working.

Air cleaning mode (for models B and C)

You can use air cleaning mode to eliminate the odour in your house during a long time at low level.

a. Touch the Speed 1 key for more than 3 seconds.

   ⇨ Air cleaning mode is activated. The light of the Speed 1 key flashes when the air cleaning mode is active.

b. The air cleaning mode will operate at Speed 1 for 10 minutes in 1 hour and will stop for 50 minutes. If you do not switch off the air cleaning mode, it will remain in operation for 10 minutes every 1 hour for 24 hours, then stop for 50 minutes.

When air cleaning mode is active, it is automatically cancelled at the touch of any key except lamp key. Your hood continues to operate at the function of the key you touch.

Aluminium filter fill warning

The light of Speed 2 key flashes after every 100 hours of operation. In this case, you must clean your aluminium filter. After cleaning, the lamp warning of Speed 2 button does not turn off automatically. When you touch the speed 2 key for more than 3 seconds, aluminium filter fill warning is reset and the lamp is turned off.

If the power is cut when the hood gives aluminium filter fill warning, then the warning is not cancelled. When power is available, it continues to warn with the light of Speed 2 key flashing.

If you run your hood at any speed level with the aluminium filter fill warning, the warning will not appear for as long as the hood is running. When you turn off the hood, the fill warning flashes again.

If you turn off the warning without cleaning the aluminium filter, the operating time of 100 hours is reset and it starts over. At the end of the next 100 hours, your hood warns again.

Carbon filter fill warning (for products with carbon filter)

The light of Speed 2 key flashes after every 100 hours of operation. You must replace your carbon filter. Consult an authorized service for this. After replacement, the lamp warning of Speed 2 key does not turn off automatically. When you touch the speed 2 button for more than 3 seconds, carbon filter fill warning is reset and the lamp is turned off.

If the power is cut when the hood gives carbon filter fill warning, then the warning is not cancelled. When power is available, it continues to warn with the light of Speed 2 key flashing.

If you run your hood at any speed level with the carbon filter fill warning, the warning will not appear for as long as the hood is running. When you turn off the hood, the fill warning flashes again.

If you turn off the warning without replacing the carbon filter, the operating time of 100 hours is reset and it starts over. At the end of the next 100 hours, warning is given again.

5 Maintenance and Cleaning

5.1 General Cleaning Information

General warnings

- Service life of the product extends and frequently faced problems decrease if cleaned at regular intervals.
- Disconnect the product from the electrical connection before starting maintenance and cleaning operations. There is an electric shock hazard!
- Some detergents or cleaning agents may cause damage to the surface. Do not use abrasive detergents, cleaning powders, cleaning creams or sharp objects during cleaning.
- Do not use steam cleaning products for cleaning.

Product cleaning

- The product should be thoroughly cleaned after each use. Thus, food residues are easily cleaned and these residues are prevented from burning when the product is used again later.
- No special cleaning agent is required for cleaning the product. Clean the product using dishwashing detergent, warm water and a soft cloth or sponge and dry it with a dry cloth.
- Do not use acid or chlorine-containing cleaning agents to clean stainless or inox surfaces and handles. Clean with a soft soapy cloth and liquid (non-scratching) detergent, taking care to wipe in one direction.
- There are sensors in the backside of the product's glass cover. Do not damage these sensors during cleaning. (For model C)

5.2 Aluminium Filter

This filter serves to retain oil particles in the air. **It is recommended to clean the filter once a month under normal usage.** To achieve this:

a. Remove the aluminium filters.

b. Wash the filters in water using liquid detergent and reinstall after drying.

Aluminium filters may change colour as they are washed; this is normal and does not require replacing your filters.

You can also wash the aluminium filter in the washing machine. (max. 70 °C)

Removing aluminium filters

a. Open hood cover upwards and pull aluminium filter lock downwards as shown in the figure.

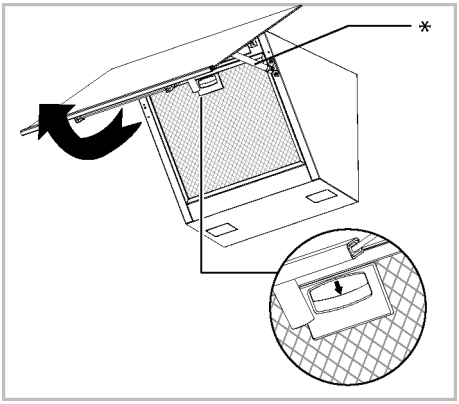

* Silencer is optional. It may not be available on your product.

b. Gently pull the filter towards you first and pull it upwards to remove it from its slot.

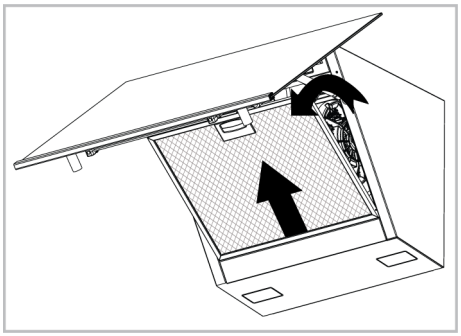

c. Reinstall the aluminium filter in its slot after flushing by following the above steps in reverse.

5.3 Hood Lamp

In the event of a lamp malfunction in the hood, contact your local dealer or the Customer Service, and ensure that the lamp is replaced.

5.4 Carbon Filter (Usage without a flue)

General warnings

- If you have installed your product without a flue, you should replace your carbon filters every 4 months in normal use. You can obtain the carbon filter from Authorized Services.
- The carbon filter should never be washed.
- If you do not follow the rules for cleaning and replacing the filters of your hood, you may cause a fire.

Removing carbon filters

a. Open the glass cover of the hood and remove the aluminium filter.

b. Unscrew the carbon filters on the right and left of the motor holder.

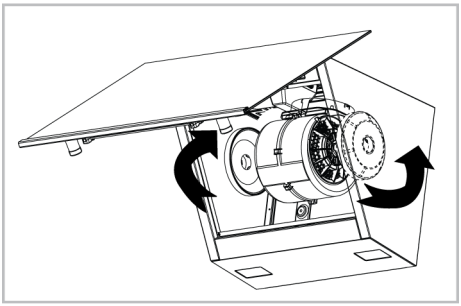

c. Place the lug slots of your new carbon filters into the lugs on the motor holder and turn them clockwise to snap them into place.

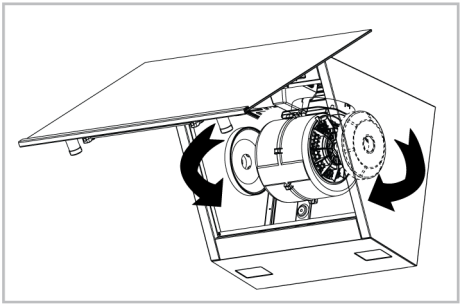

d. Close the hood glass cover after installing the aluminium filter.

6 Troubleshooting

If the problem persists after following the instructions in this section, contact your vendor or an Authorized Service. Never try to repair your product yourself.

Product is not working.

- Fuse may be faulty or blown. >>> Check the fuses in the fuse box. Change them if necessary or reactivate them.
- The product may not be plugged in. >>> Check if the product is plugged in to the outlet or not.
- The speed button may not be set. >>> Press/touch the desired speed button.
- No electricity. >>> Ensure the mains is operational and check the fuses in the fuse box. Change the fuses if necessary or reactivate them.

Hood light is not on.

- Hood lamp may be faulty. >>> Contact your local dealer where you purchased your product or the Customer Service, and ensure that the lamp is replaced.
- No electricity. >>> Ensure the mains is operational and check the fuses in the fuse box. Change the fuses if necessary or reactivate them.