HVB95450IB

EN **User Manual**
Hob

USER MANUAL

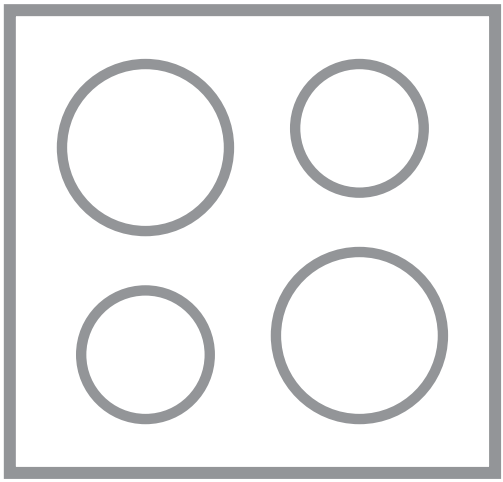

AEG

CONTENTS

1. SAFETY INFORMATION....2
2. SAFETY INSTRUCTIONS....5
3. INSTALLATION....8
4. PRODUCT DESCRIPTION....13
5. DAILY USE....15
6. HINTS AND TIPS....18
7. CARE AND CLEANING....20
8. TROUBLESHOOTING....22
9. TECHNICAL DATA....25
10. ENERGY EFFICIENCY....26
11. ENVIRONMENTAL CONCERNS....27

FOR PERFECT RESULTS

Thank you for choosing this AEG product. We have created it to give you impeccable performance for many years, with innovative technologies that help make life simpler – features you might not find on ordinary appliances. Please spend a few minutes reading to get the very best from it.
Visit our website to:

Get usage advice, brochures, trouble shooter, service and repair information:
www.aeg.com/support

Register your product for better service:
www.registeraeg.com

Buy Accessories, Consumables and Original spare parts for your appliance:
www.aeg.com/shop

CUSTOMER CARE AND SERVICE

Always use original spare parts.
When contacting our Authorised Service Centre, ensure that you have the following data available: Model, PNC, Serial Number.
The information can be found on the rating plate.

⚠ Warning / Caution-Safety information

ⓘ General information and tips

Environmental information

Subject to change without notice.

1. ⚠ SAFETY INFORMATION

Before the installation and use of the appliance, carefully read the supplied instructions. The manufacturer is not responsible for any injuries or damage that are the result of incorrect installation or usage. Always keep the

instructions in a safe and accessible location for future reference.

1.1 Children and vulnerable people safety

- This appliance can be used by children aged from 8 years and above and persons with reduced physical, sensory or mental capabilities or lack of experience and knowledge if they have been given supervision or instruction concerning the use of the appliance in a safe way and understand the hazards involved. Children of less than 8 years of age and persons with very extensive and complex disabilities shall be kept away from the appliance unless continuously supervised.
- Children should be supervised to ensure that they do not play with the appliance.
- Keep all packaging away from children and dispose of it appropriately.
- WARNING: The appliance and its accessible parts become hot during use. Keep children and pets away from the appliance when in use and when cooling down.
- If the appliance has a child safety device, it should be activated.
- Children shall not carry out cleaning and user maintenance of the appliance without supervision.

1.2 General Safety

- This appliance is for cooking purposes only.
- This appliance is designed for single household domestic use in an indoor environment.
- This appliance may be used in, offices, hotel guest rooms, bed & breakfast guest rooms, farm guest houses and other similar accommodation where such use does not exceed (average) domestic usage levels.
- WARNING: The appliance and its accessible parts become hot during use. Care should be taken to avoid touching heating elements.

- WARNING: Unattended cooking on a hob with fat or oil can be dangerous and may result in fire.
- Never use water to extinguish the cooking fire. Switch off the appliance and cover flames with e.g. a fire blanket or lid.
- WARNING: The appliance must not be supplied through an external switching device, such as a timer, or connected to a circuit that is regularly switched on and off by a utility.
- CAUTION: The cooking process has to be supervised. A short term cooking process has to be supervised continuously.
- WARNING: Danger of fire: Do not store items on the cooking surfaces.
- Metallic objects such as knives, forks, spoons and lids should not be placed on the hob surface since they can get hot.
- Do not use the appliance before installing it in the built-in structure.
- Do not use a steam cleaner to clean the appliance.
- If the glass ceramic surface / glass surface is cracked, switch off the appliance and unplug it from the mains. In case the appliance is connected to the mains directly using junction box, remove the fuse to disconnect the appliance from power supply. In either case contact the Authorised Service Centre.
- In case of hotplate glass breakage:
  - shut immediately off all burners and any electrical heating element and isolate the appliance from the power supply,
  - do not touch the appliance surface,
  - do not use the appliance.
- If the supply cord is damaged, it must be replaced by the manufacturer, an authorized Service or similarly qualified persons in order to avoid a hazard.
- Where the appliance is directly connected to the power supply, an all-pole isolating switch with a contact gap is required. Complete disconnection in

compliance with the conditions specified in overvoltage category III must be guaranteed. The earth cable is excluded from this.

- When you route the mains cable, make sure that the cable doesn't come into direct contact (for example using insulating sleeving) with parts that can reach temperatures of more than 50°C above room temperature.
- WARNING: Use only hob guards designed by the manufacturer of the cooking appliance or indicated by the manufacturer of the appliance in the instructions for use as suitable or hob guards incorporated in the appliance. The use of inappropriate guards can cause accidents.

2. SAFETY INSTRUCTIONS

This appliance is suitable for the following markets: IT

2.1 Installation

WARNING!
Only a qualified person must install this appliance.

WARNING!
Risk of injury or damage to the appliance.

- Remove all the packaging.
- Do not install or use a damaged appliance.
- Follow the installation instructions supplied with the appliance.
- Keep the minimum distance from other appliances and units.
- Always take care when moving the appliance as it is heavy. Always use safety gloves and enclosed footwear.
- Seal the cut surfaces with a sealant to prevent moisture from causing swelling.
- Protect the bottom of the appliance from steam and moisture.
- Do not install the appliance next to a door or under a window. This prevents hot cookware from falling from the appliance when the door or the window is opened.
- If the appliance is installed above drawers make sure that the space, between the bottom of the appliance and the upper drawer is sufficient for air circulation.
- The bottom of the appliance can get hot. Install a non-combustible separation panel under the appliance to prevent access to the bottom.

2.2 Electrical Connection

WARNING!
Risk of fire and electric shock.

- All electrical connections should be made by a qualified electrician.
- The appliance must be earthed.
- Before carrying out any operation make sure that the appliance is disconnected from the power supply.
- Make sure that the parameters on the rating plate are compatible with the electrical ratings of the mains power supply.
- Make sure the appliance is installed correctly. Loose and incorrect electricity mains cable or plug (if

applicable) can make the terminal become too hot.
- Use the correct electricity mains cable.
- Do not let the electricity mains cable tangle.
- Make sure that a shock protection is installed.
- Use the strain relief clamp on the cable.
- Make sure the mains cable or plug (if applicable) does not touch the hot appliance or hot cookware, when you connect the appliance to a socket.
- Do not use multi-plug adapters and extension cables.
- Make sure not to cause damage to the mains plug (if applicable) or to the mains cable. Contact our Authorised Service Centre or an electrician to change a damaged mains cable.
- The shock protection of live and insulated parts must be fastened in such a way that it cannot be removed without tools.
- Connect the mains plug to the mains socket only at the end of the installation. Make sure that there is access to the mains plug after the installation.
- If the mains socket is loose, do not connect the mains plug.
- Do not pull the mains cable to disconnect the appliance. Always pull the mains plug.
- Use only correct isolation devices: line protecting cut-outs, fuses (screw type fuses removed from the holder), earth leakage trips and contactors.
- The electrical installation must have an isolation device which lets you disconnect the appliance from the mains at all poles. The isolation device must have a contact opening width of minimum 3 mm.

2.3 Gas connection

CAUTION!
When using a gas cylinder, always keep it on a flat horizontal surface (with the gas valve on top).

- All gas connections must be made by a qualified person.
- Before installation, make sure that the local distribution conditions (nature of the gas and gas pressure) and the adjustment of the appliance are compatible.
- Make sure that there is air circulation around the appliance.
- The information about the gas supply is on the rating plate.
- This appliance is not connected to a device, which evacuates the products of combustion. Make sure to connect the appliance according to current installation regulations. Follow the requirements for adequate ventilation.

2.4 Use

WARNING!
Risk of injury, burns and electric shock.

CAUTION!
The use of a gas cooking appliance results in the production of heat, moisture and products of combustion in the room in which it is installed. Ensure that the kitchen is well ventilated especially when the appliance is in use. Prolonged intensive use of the appliance may require additional ventilation, for example the increasing of mechanical ventilation where present, additional ventilation to safely remove the products of combustion to outside (external) air whilst also providing room air changes with additional ventilation. Consult a qualified person before installation of the additional ventilation.

- Do not change the specification of this appliance.
- Remove all the packaging, labelling and protective film (if applicable) before first use.
- Make sure that the ventilation openings are not blocked.

- Do not let the appliance stay unattended during operation.
- Set the cooking zone to “off” after each use.
- Do not put cutlery or saucepan lids on the cooking zones. They can become hot.
- Do not operate the appliance with wet hands or when it has contact with water.
- Do not use the appliance as a work surface or as a storage surface.
- When you place food into hot oil, it may splash.



WARNING!
Risk of fire and explosion

- Fats and oil when heated can release flammable vapours. Keep flames or heated objects away from fats and oils when you cook with them.
- The vapours that very hot oil releases can cause spontaneous combustion.
- Used oil, that can contain food remnants, can cause fire at a lower temperature than oil used for the first time.
- Do not put flammable products or items that are wet with flammable products in, near or on the appliance.



WARNING!
Risk of damage to the appliance.

- Do not keep hot cookware on the control panel.
- Do not let cookware boil dry.
- Be careful not to let objects or cookware fall on the appliance. The surface can be damaged.
- Never leave a burner on with empty cookware or without cookware.
- Do not put aluminium foil on the appliance.
- Cookware made of cast iron, aluminium or with a damaged bottom can cause scratches on the glass / glass ceramic. Always lift these objects up when you have to move them on the cooking surface.
- Use only stable cookware with the correct shape and diameter larger than the dimensions of the burners.
- Make sure cookware is centrally positioned on the burners.
- Do not use large cookware that overlap the edges of the appliance. This can cause damage to the worktop surface.
- Use only the accessories supplied with the appliance.
- Do not install a flame diffuser on the burner.
- Do not let acid liquids, for example vinegar, lemon juice or limescale remover, touch the hob. This can cause matt patches.
- Discoloration of the enamel or stainless steel has no effect on the performance of the appliance.

2.5 Care and cleaning

- Clean the appliance regularly to prevent the deterioration of the surface material.
- Switch off the appliance and let it cool down before cleaning.
- Do not use water spray and steam to clean the appliance.
- Clean the appliance with a moist soft cloth. Use only neutral detergents. Do not use abrasive products, abrasive cleaning pads, solvents or metal objects.
- Do not clean the burners in the dishwasher.
- Clean the metal part of the flame safety device regularly.

2.6 Service

- To repair the appliance contact the Authorised Service Centre. Use original spare parts only.
- Concerning the lamp(s) inside this product and spare part lamps sold separately: These lamps are intended to withstand extreme physical conditions in household appliances, such as temperature, vibration, humidity, or are intended to signal information about the operational status of the appliance. They are not intended to be used in other applications and are not suitable for household room illumination.

2.7 Disposal

WARNING!
Risk of injury or suffocation.

- Contact your municipal authority for information on how to dispose of the appliance.
- Disconnect the appliance from the mains supply.
- Cut off the mains electrical cable close to the appliance and dispose of it.
- Flat the external gas pipes.

3. INSTALLATION

WARNING!
Refer to Safety chapters.

3.1 Before the installation

Before you install the hob, write down the information bellow from the rating plate. The rating plate is on the bottom of the hob.

Model .....
PNC .....
Serial number .....

3.2 Gas Connection

WARNING!
The following instructions about installation, maintenance and ventilation must be carried out by qualified personnel in compliance with the regulation in force (UNI-CIG 7129 - 7131). Make sure that the kitchen is well ventilated: keep natural ventilation holes open (at least 100 cm^2) or install a mechanical extractor hood.

Choose fixed connections or use a flexible pipe in stainless steel in compliance with the regulation in force. If you use flexible metallic pipes, be careful they do not come in touch with mobile parts or they are not squeezed. Also be careful when the hob is put together with an oven.

Make sure that the gas supply pressure of the appliance obeys the recommended values.

If the supplied pressure has not the specified value, it is necessary to assemble a proper pressure regulator in compliance with the standard UNI EN 88. For Liquid Gas (LPG) the use of pressure regulator is allowed only if they are in compliance with UNI EN 12864. The adjustable connection is fixed to the comprehensive ramp by means of a threaded nut G 1/2". Screw the parts without force, adjust the connection in the necessary direction and tighten everything.

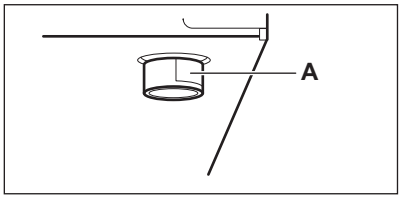

A. End of shaft with nut

Rigid connection:
Carry out connection by using metal rigid pipes (copper with mechanical end) (UNI-CIG 7129).

Flexible connection:
Use a flexible pipe in stainless steel (UNI-CIG 9891) with a maximum length 2 m.

WARNING!
When installation is complete, make sure that the seal of each pipe fitting is correct. Use a soapy solution, not a flame!

3.3 Injectors replacement

WARNING!
Information for authorised installer only.

1. Remove the pan supports.
2. Remove the caps and crowns of the burner.
3. With a socket spanner 7 remove the injectors and replace them with the ones which are necessary for the type of gas you use (see table in "Technical Data" chapter).
4. Assemble the parts, follow the same procedure backwards.
5. Attach the label with the new type of gas supply near the gas supply pipe. You can find this label in the package supplied with the appliance.

If the supply gas pressure is changeable or different from the necessary pressure, you must fit an applicable pressure adjuster on the gas supply pipe.

3.4 Gas selection

WARNING!
Information for authorised installer only.

1. Touch ⏻ for 3 seconds.
2. Within 7 seconds, touch AUTO for 3 seconds.
3. Touch ⏲ 3 times.

The display shows G1 mode.

4. Touch +.

To enter the mode.

5. Timer display shows selected gas type.
6. Touch + to set the gas type according to table below.
7. Touch ⏲.

To confirm the gas type.

Touch ⏻ to exit the mode or wait for Automatic Switch Off function activates.

Gas selection		
0	**1**	**2**
G20 20 mbar	Liquid gas 29 mbar	Safety risk, do not use 2 gas selection. Use only 0 or 1 gas selections depend on gas supply.

3.5 Adjustment of minimum level

WARNING!
Information for authorised installer only.

Switch off the hob before the adjustment.

To adjust the minimum level of the burners:

1. Touch ⏻ for 3 seconds.
2. Within 7 seconds, touch AUTO for 3 seconds.
3. Touch ⏲ 4 times.

The display shows G2 mode.

4. Touch +.

To enter the mode.

5. Wait 5 seconds, after selecting the mode.

The burner shows minimum level and the control bar shows i.

6. Touch + or —.

To increase or decrease the value and adjust the minimum level.

7. Wait 5 seconds.

To send the selected value to power board.

8. Check it the minimum level is correct and touch ⏲.

To confirm the minimum level.

If the minimum level is incorrect, repeat the steps 6 and 7.

9. Touch ⏲ to select the next burner and repeat the steps 5-8.

Touch ⏻ to exit the mode.

WARNING!
Make sure the flame does not go out when you move quickly from the maximum to the minimum heat setting position.

WARNING!
Do not set the G3 and G4 modes. It is for authorised installer only.

3.6 Electrical connection

- Make sure that the rated voltage and type of power on the rating plate agree with the voltage and the power of the local power supply.
- This appliance is supplied with a mains cable. It has to be supplied with a correct plug which can hold the load that the rating plate rates. Make sure that you install the plug in a correct socket.
- Always use a correctly installed shockproof socket.
- Make sure that there is an access to the mains plug after the installation.
- Do not pull the mains cable to disconnect the appliance. Always pull the mains plug.
- There is a risk of fire when the appliance is in connection with an extension cable, an adapter or a multiple connection. Make sure that the ground connection agrees with the standards and regulations.
- Do not let the power cable to heat up to a temperature higher than 90° C.

To prevent contact between the cable and the appliance below the hob use the clamps which are on the side of the cabinet.

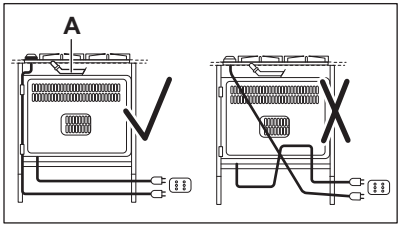

A. Rigid copper pipe or flexible pipe of stainless steel

3.7 Connection cable

To replace the connection cable use only the special cable or its equivalent. The cable type is: H05V2V2-F T90.

Make sure that the cable section is applicable to the voltage and the working temperature. The yellow / green earth wire must be approximately 2 cm longer than the brown (or black) phase wire.

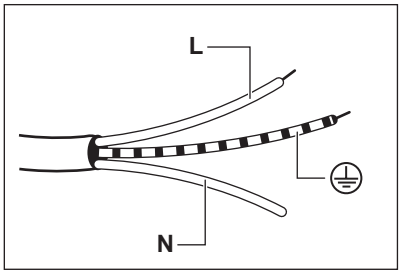

1. Connect the green and yellow (earth) wire to the terminal which is marked with the letter 'E', or the earth symbol ⏚, or coloured green and yellow.
2. Connect the blue (neutral) wire to the terminal which is marked with the letter 'N' or coloured blue.
3. Connect the brown (live) wire to the terminal which is marked with the letter 'L'. It must always be connected to the network phase.

3.8 Assembly

1.

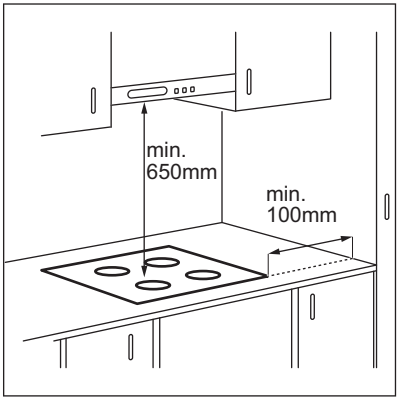

2.

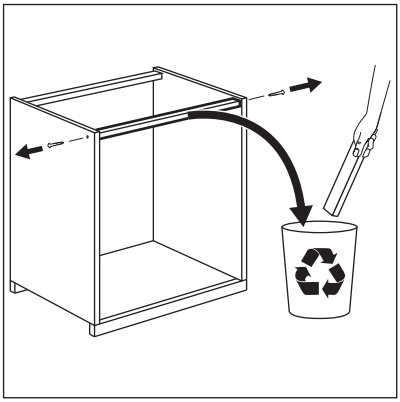

3.

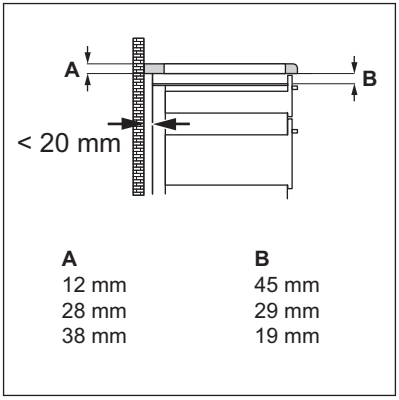

A	B
12 mm	45 mm
28 mm	29 mm
38 mm	19 mm

4.

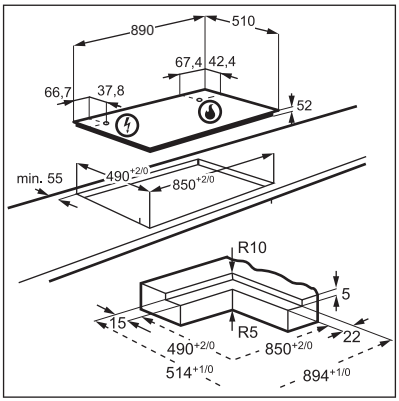

5.

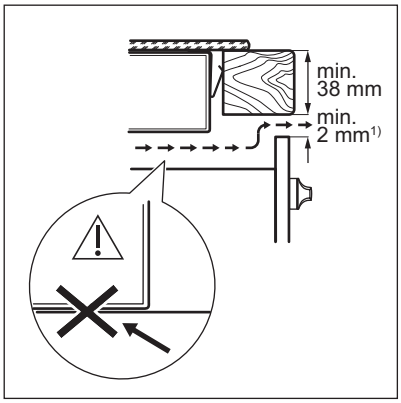

1) Unless otherwise specified in the oven installation.

6.

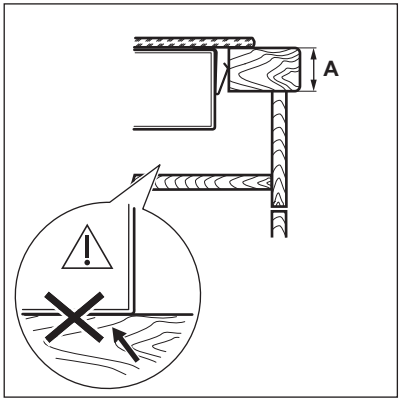

7.

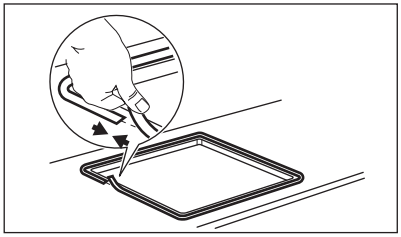

8.

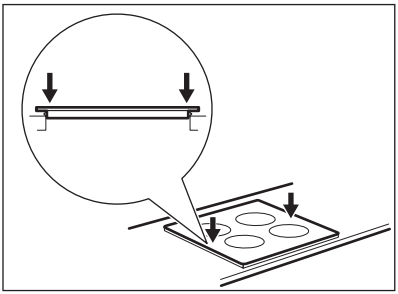

9.

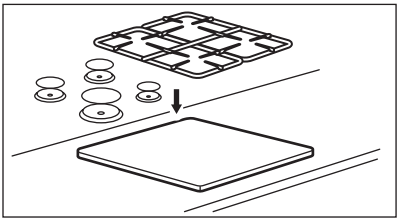

CAUTION!
Install the appliance only on a worktop with flat surface.

3.9 Installing hob under the hood

If you install the hob under a hood, please see the installation instructions of the hood for the minimum distance between the appliances.

3.10 Possibilities for insertion

The panel installed below the hob must be easy to remove and let an easy access in case a technical assistance intervention is necessary.

Kitchen unit with door

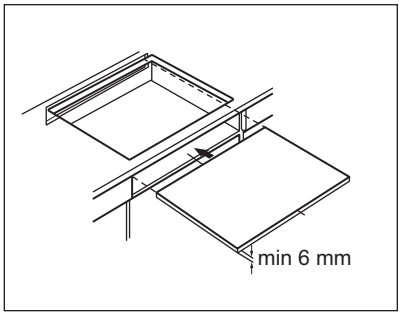

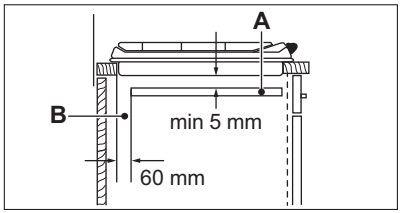

A. Removable panel
B. Space for connections

Kitchen unit with oven
The electrical connection of the hob and the oven must be installed separately for safety reasons and to let easy remove oven from the unit.

4. PRODUCT DESCRIPTION

4.1 Cooking surface layout

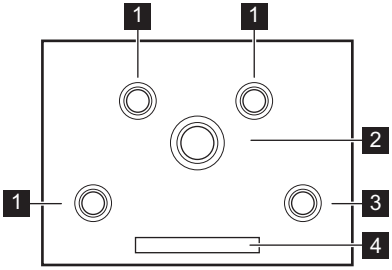

1 Semi-rapid burner
2 Multi Crown burner
3 Auxiliary burner
4 Control panel

4.2 Control panel layout

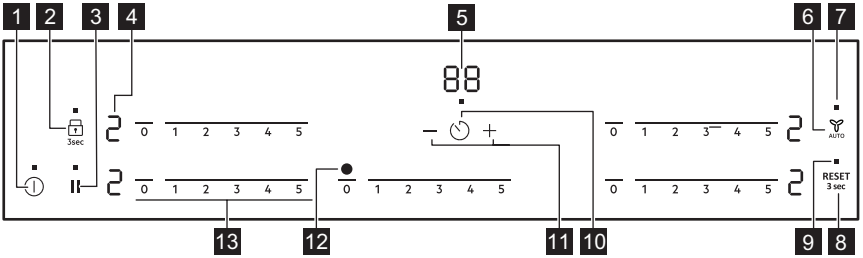

Use the sensor fields to operate the appliance. The displays, indicators and sounds tell which functions operate.

	Sensor field	Function	Comment
1	⏻	ON / OFF	To activate and deactivate the hob.
2	3sec	Lock / Child Safety Device	To lock / unlock the control panel.
3	⏸	Pause	To activate and deactivate the function.
4	-	Heat setting display	To show the heat setting.
5	-	Timer display	To show the time in minutes or possible error codes E (Refer to "Troubleshooting").
6	AUTO	Hob²Hood	To activate and deactivate the manual mode of the function.
7	■	Led indicator	To show activated function.

	Sensor field	Function	Comment
8	RESET 3 sec	Reset the hob	To reset the hob (Refer to "Troubleshooting").
9	■	Reset led indicator	To show activated function. Reset procedure required.
10	⏲	-	To activate and deactivate the Timer.
11	+ / −	-	To increase or decrease the time.
12	-	Area for Hob²Hood infrared signal	To hood communication.
13	-	Control bar	To set the heat setting for the burner.

4.3 Heat setting displays

Display	Description
0	Burner is deactivated.
1 - 5	Burner operates.
F	There is a warning (Refer to "Troubleshooting").
H	A cooking zone is still hot (residual heat).
L	Lock / Child Safety Device operates.
1	Pause operates.
-	Automatic Switch Off function operates.

4.4 Hot Surface Indicator

WARNING!
If the cooking zone becomes hot during cooking, the setting indicator shows a Hot Surface warning H when the zone is turned off. The Hot Surface Indicator shows until the cooking zone cools, the hob is unplugged or there is a power cut.

5. DAILY USE

WARNING!
Refer to Safety chapters.

5.1 Burner overview

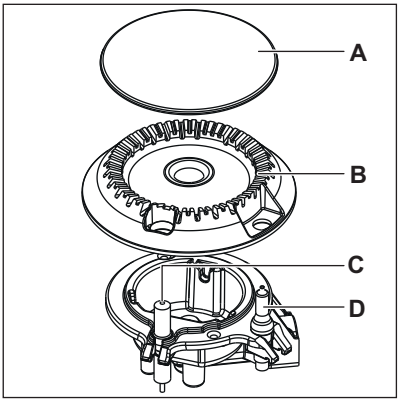

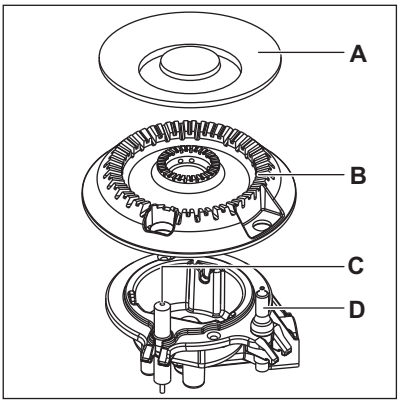

A. Burner cap
B. Burner crown
C. Ignition candle
D. Flame safety device

5.2 Ignition of the burner

Always light the burner before you put on the cookware.

WARNING!
Be very careful when you use open fire in the kitchen environment. The manufacturer declines any responsibility in case of the flame misuse.

1. Touch ⏻ for 1 second to activate the hob.

After 20 seconds of non-use, the hob deactivates.

2. After light animation, when you see 0 on display, touch the control bar at the correct heat setting or move your finger along the control bar until you reach the correct heat setting.

To set or change the heat setting.

If after some tries the burner does not light, check if the crown and its cap are in correct positions and clean the metal part of the flame safety device (Refer to "Care and cleaning").

If during the normal use of the burner it starts to spark and flame adjust automatically, check if the metal part of the ignition candle and the flame safety device are clean (Refer to "Care and cleaning").

If the burner accidentally goes out, the hob re-ignite the burner 3 times. If the flame still does not light, F appears.

If the warning F appears, turn off and turn on again the hob. When the display function F reappears, after light animation, touch RESET 3 sec for 3 seconds.

When you see 0 the warning is reset (Refer to "Troubleshooting").

5.3 Turning the burner off

To put the flame out, touch the control bar to the off position 0.

WARNING!
Always turn the flame down or switch it off before you remove the pans from the burner.

5.4 Automatic Switch Off

The function deactivates the hob automatically if:

- all burners are deactivated,
- you do not set the heat setting after you activate the hob,
- you spill something or put something on the control panel for more than 10 seconds (a pan, a cloth, etc.). An acoustic signal sounds and the hob deactivates. Remove the object or clean the control panel.
- you do not deactivate a burner or change the heat setting. After some time - comes on and the hob deactivates.

The relation between the heat setting and the time after which the hob deactivates:

Level	Time (hours)
1	6
2	3
3	3
4	1,5
5	1,5

5.5 Lock or unlock the cooktop

You can lock the control panel while burners operate. It prevents an accidental change of the heat setting.

To lock the control panel:

1. Set the heat setting.
2. Touch the 3sec.
3. L appears on the display of the burner.

To unlock the control panel, touch 3sec again.

You can turn the burners off while the control panel is locked. Use ⏻ to deactivate the hob.

To set the lock for child safety:

1. Touch ⏻ to turn the cooktop on.
2. Touch 3sec for 3 seconds, to activate the lock. L comes on in all control bars.
3. Touch ⏻ to turn the cooktop off.

You can unlock the cooktop while the child safety operates.

To temporarily unlock:

1. Touch ⏻ to turn the cooktop on.
2. Touch 3sec for 3 seconds.
3. L appears on the display of the burner.
4. Set the heat setting.
5. After end of the cooking process and after turning off the cooktop, the Lock function is active.

To completely unlock:

1. Touch ⏻ to turn the cooktop on.
2. Touch 3sec for 3 seconds. The lock deactivates.
3. Touch ⏻ to turn the cooktop off.

5.6 Pause

This function sets all burners that operate to the lowest heat setting.

When the function operates, you can not change the heat setting.

When the function does not stop the timer functions.

Touch ⏸ to activate the function. I comes on.

To deactivate the function, touch ⏸. The previous heat setting comes on.

5.7 Minute Minder

You can use this function as a Minute Minder when the hob is activated.

1. Touch ⏲.
2. Touch + or − of the timer to set the time in minutes (00-99). The timer indicator ■ starts to flash quickly during the time setting.
3. When the timer indicator ■ starts to flash slowly, the timer is activated.

When the time comes to an end, the sound operates and **00** flashes.

4. Touch ⏲.

To stop the sound.

The function has no effect on the operation of the burners.

The maximum duration of the timer functions is 00-99 minutes. Check the minute minder instructions (missing timer adjustment).

5.8 OffSound Control (Deactivating and activating the sounds)

Deactivate the hob. Touch ⏻ for 3 seconds. The display comes on and goes out. Touch 3sec for 3 seconds. 60 or 61 comes on. Touch + of the timer to choose one of the following:

- 61 - the sounds are off
- 60 - the sounds are on

To confirm your selection wait until the hob deactivates automatically.

When the function is set to 61 you can hear the sounds only when:

- you touch ⏻
- Minute Minder comes down
- Count Down Timer comes down
- you put something on the control panel.

5.9 AUTO Hob²Hood

It is an advanced automatic function which connects the hob to a special hood. Both the hob and the hood have an infrared signal communicator. Speed of the fan is defined automatically on the basis of the mode setting and temperature of the hottest cookware on the hob. You can also operate the fan from the hob manually.

The hood operates only when the hob is activated.

For most of the hoods, the remote system is originally deactivated. Activate it before you use the function. For more information refer to the hood user manual.

The hob automatically sets the speed of the fan according to the cooking process.

Automatic modes

Mode	Mode description	Automatic light	Automatic fan speed
H0	Manual	Off	Off
H1	Auto light	On	Off
H2	Fixed speed	On	1
H3	Auto speed Low	On	0-1
H4	Auto speed Mid	On	0-1
H5	Auto speed High	On	0-2
H6	Auto speed Intense	On	0-3

Changing the automatic mode

1. Deactivate the appliance.
2. Touch ⏻ for 3 seconds. the display comes on and goes off.
3. Touch 3sec for 3 seconds.

4. Touch ⏲ a few times until H comes on.
5. Touch + of the Timer to select an automatic mode.

Touch AUTO to set the speed manually.

Touch longer AUTO to turn off the fan and the light.

WARNING!
After end of cooking, the hood does not turn off automatically. Turn it off manually.

6. HINTS AND TIPS

WARNING!
Refer to Safety chapters.

6.1 Cookware

CAUTION!
Do not use cast iron pans, clay or earthenware pots, grill or toaster plates.

WARNING!
Do not put the same pan on two burners.

WARNING!
Do not put unstable or damaged pots on the burner to prevent spills and injuries.

CAUTION!
Make sure that pot handles are not above the front edge of the cooktop.

CAUTION!
Make sure that the pots are placed centrally on the burner in order to get the maximum stability and a lower gas consumption.

CAUTION!
Liquids spilt during cooking can cause the glass to break.

6.2 Diameters of cookware

Use cookware with diameters applicable to the size of burners.

Burner	Diameter of cookware (mm)
Multi Crown	220 - 260
Semi-rapid (rear left)	120 - 240
Semi-rapid (rear right)	120 - 240
Semi-rapid (front left)	120 - 220
Auxiliary	80 - 180

6.3 Hints and Tips for Hob²Hood

When you operate the hob with the function:

- Protect the hood panel from direct sunlight.
- Do not spot halogen light on the hood panel.
- Do not cover the hob control panel.
- Do not interrupt the signal between the hob and the hood (e.g. with the hand, a cookware handle or a tall pot). See the picture.

The hood in the picture is only exemplary.

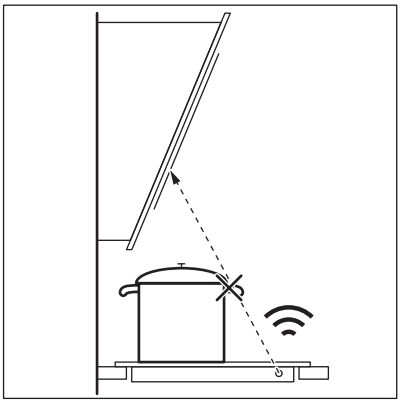

Keep the window for Hob²Hood infrared signal communicator clean.

Other remotely controlled appliances may block the signal. Do not use any remotely controlled appliances at the time when you use the function on the hob.

Cooker hoods with the Hob²Hood function

To find the full range of cooker hoods which work with this function refer to our consumer website. The AEG cooker hoods that work with this function must have the symbol AUTO.

6.4 Examples of cooking applications

The data in the table shows examples of the heat setting and cooking times for gentle and heavy frying, and delicate cooking.

- Adjust the settings depend on the type of food, the type of the gas used, the material and the size of the pans. Refer to diameters of cookware in Hints and Tips chapter.
- For delicate cooking use the auxiliary burner or semi-rapid burner with flame spreader.
- For an even heat distribution use coated pan and cook on auxiliary or semi-rapid burners.
- Each example in the table below shows two or three steps.
- If you use a pan, heat up the oil first, while frying keep the pan at a constant temperature in accordance with the values suggested in the table.

Cooking method symbols used in the table:

	Heat up the oil
	Gentle frying
	Heat to boiling
	Simmering
	Blending, melting ingredients

Food	Portions	Burner	Step 1			Step 2			Step 3		
			Symbol	Level	Time (min)	Symbol	Level	Time (min)	Symbol	Level	Time (min)
Crepes	4	SR		5	1-4		2	4-8			

Burgers	2	AUX		5	1-5		3	4-8			
Burgers	3	SR		5	1-5		3	4-8			
Burgers	4	MC		5	1-5		3	4-7			
Fries	4	MC		5	20-30						
Bechamel[1)]	4	AUX	 2)	1	5-10	 2)	5	5-10	 2)	1	4-8
Rice porridge[1)]	4	AUX	 2)	5	10-20	 2)	1	30-40			

1) Stirring continuously

2) Without lid

7. CARE AND CLEANING

WARNING!
Refer to Safety chapters.

7.1 General information

- Clean the hob after each use.
- It is recommended to activate the lock / child safety device function (Refer to "Lock or unlock the cooktop" in "Daily use" chapter).
- Always use cookware with a clean base.
- Scratches or dark stains on the surface have no effect on how the hob operates.
- Use a special cleaner suitable for the surface of the hob.

The presence of water or other liquids on the control panel can accidentally activate or deactivate the hob functions.

WARNING!
Do not use knives, scrapers or similar instruments to clean the surface of the glass or the rims of the burners and the frame (if applicable).

- Wash stainless steel parts with water, and then dry them with a soft cloth.

7.2 Pan supports

The pan supports are not resistant to washing in a dishwasher. They must be washed by hand.

1. Remove the pan supports to easily clean the hob.

Be very careful when you replace the pan supports to prevent the hob top from damage.

2. The enamel coating occasionally can have rough edges, so be careful

when you wash the pan supports by hand and dry them. If necessary, remove stubborn stains with a paste cleaner.
3. After you clean the pan supports, make sure that they are in correct positions.
4. For the burner to operate correctly, make sure that the arms of the pan supports are aligned with the centre of the burner.

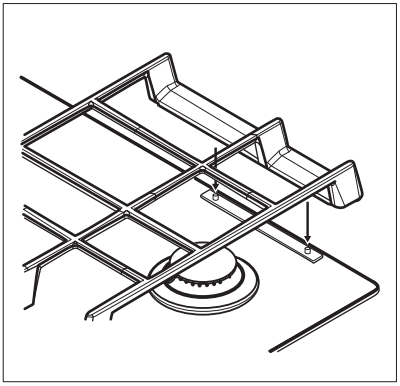

7.3 Removing pan supports

To keep the pan supports in the correct position, they are put on metal pins installed in the rear side of the hob. For easier cleaning, pan supports can be removed from the hob. Lift up the pan supports keeping them in horizontal position as shown in the graphic.

Do not lift the pan supports at an angle, as this will put strain on the metal pins. This can cause damage to the pins and cause them to break.

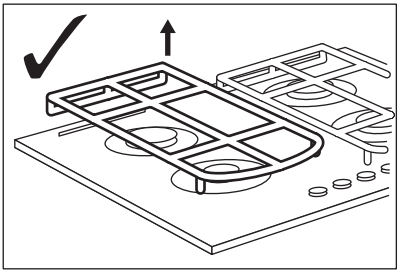

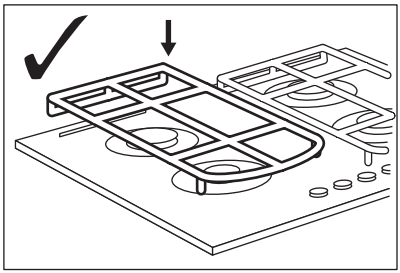

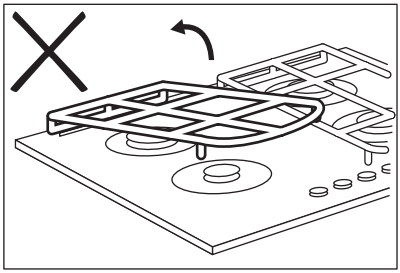

The shape of pan supports and the amount of burners can be different in other models of the appliance.

7.4 Cleaning the hob

- **Remove immediately:** melted plastic, plastic foil, sugar and food with sugar, otherwise, the dirt can cause damage to the hob. Take care to avoid burns.
- **Remove when the hob is sufficiently cool:** limescale rings, water rings, fat stains, shiny metallic discoloration. Clean the hob with a moist cloth and a non-abrasive detergent. After cleaning, wipe the hob dry with a soft cloth.
- To clean the enamelled parts, caps and crowns, wash them with warm soapy water and dry them carefully before you put them back on.

7.5 Cleaning the ignition candle and the flame safety device

Keep the metal part of the ignition candle and the flame safety device cleaned with a moist cloth or sponge to prevent difficult lightning or difficult flame recognition. Check if the burner crown is not blocked with food residues.

7.6 Periodic maintenance

Speak to your local Authorised Service Centre periodically to check the conditions of the gas supply pipe and the pressure adjuster, if fitted.

8. TROUBLESHOOTING

WARNING!
Refer to Safety chapters.

8.1 What to do if...

Problem	Possible cause	Remedy
You cannot activate or operate the hob.	The hob is not connected to an electrical supply or it is connected incorrectly.	Check if the hob is correctly connected to the electrical supply. Refer to the connection diagram.
	The fuse is blown.	Make sure that the fuse is the cause of the malfunction. If the fuse is blown again and again, contact a qualified electrician.
	You do not set the heat setting for 20 seconds.	Activate the hob again and set the heat setting in less than 20 seconds.
	You touched 2 or more sensor fields at the same time.	Touch only one sensor field.
	There is water or fat stains on the control panel.	Clean the control panel.
An acoustic signal sounds and the hob deactivates. An acoustic signal sounds when the hob is deactivated.	You put something on one or more sensor fields.	Remove the object from the sensor fields.
The hob deactivates.	You put something on the sensor field ⏻.	Remove the object from the sensor field.
The reset led indicator ■ blinks.	The reset procedure required.	Refer to "Control panel layout" (as if warning F appears).
Hob²Hood function does not work.	You covered the control panel.	Remove the object from the control panel.
The sensor fields become hot.	The cookware is too large or you put it too near to the controls.	Put large cookware on the rear burners if possible.

Problem	Possible cause	Remedy
There is no sound when you touch the panel sensor fields.	The sounds are deactivated.	Activate the sounds. Refer to "Daily use".
You can hear sparking for a few seconds after the flame goes out and automatic re-ignition is performed.	Air currents around the burner.	Make sure that air currents from windows or doors do not extinguish the flame.
	Burner cap or crown are placed incorrectly.	Place burner cap and crown in correct position.
	Metal part of the flame safety device is dirty.	Refer to "Care and cleaning".
[-] comes on.	Automatic Switch Off operates.	Deactivate the hob and activate it again.
[L] comes on.	The Child Safety Device function operates.	Refer to "Daily use".
[F] comes on.	The flame does not light up in 3 attempts.	To reset the warning [F] turn off and turn on again the hob. When the display function [F] reappears, after light animation, touch RESET 3 sec for 3 seconds. When you see [0] the warning is reset.
	Burner cap or crown are placed incorrectly.	
	Metal part of the flame safety device is dirty (Refer to "Care and cleaning").	
You can hear a constant beep noise.	The electrical connection is incorrect.	Disconnect the hob from the electrical supply. Ask a qualified electrician to check the installation.
[E4] - [21] comes on.	The hob is too hot.	Wait a few minutes for cool down the hob. If possible, put the large cookware on the rear burners.
[E6] - [71] comes on.	The hob is overheated.	Wait for 30 minutes and follow the same procedure as if warning [F] appeared. If the problem persist, contact an Authorised Service Centre.

Problem	Possible cause	Remedy
E6 - XX comes on.	Temporary condition of failure.	Follow the same procedure as if warning F appeared. If the problem persist, contact an Authorised Service Centre.
E7 - XX comes on.	Too many attempts to clear the warning F.	Wait for 15 minutes. Follow the same procedure as if warning F appeared. If the problem persist, contact an Authorised Service Centre.
E0 - XX come on.	There is an error in the hob.	Contact an Authorised Service Centre.
E9 - XX come on.	There is an error in the hob.	Disconnect the hob from the electrical supply for some time. Disconnect the fuse from the electrical system of the house. Connect it again. If E comes on again, speak to an Authorised Service Centre.
b comes on.	There is a dirt around burner area.	Refer to "Care and cleaning".

8.2 If you cannot find a solution...

If you cannot find a solution to the problem yourself, contact your dealer or an Authorised Service Centre. Give the data from the rating plate. Make sure, you operated the hob correctly. If not the servicing by a service technician or dealer will not be free of charge, also during the warranty period. The instructions about the Service Centre and conditions of guarantee are in the guarantee booklet.

8.3 Labels supplied with the accessories bag

Stick the adhesive labels as indicated below:

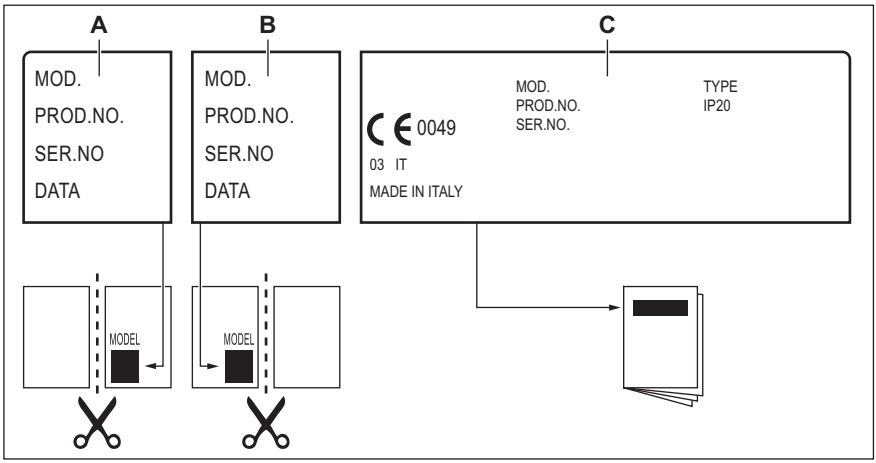

A. Stick it on Guarantee Card and send this part (if applicable).
B. Stick it on Guarantee Card and keep this part (if applicable).
C. Stick it on instruction booklet.

9. TECHNICAL DATA

9.1 Hob dimensions

Width	890 mm
Depth	510 mm

9.2 Other technical data

TOTAL POWER:	Gas original:	G20 (2H) 20 mbar	10,2 kW
	Gas replacement:	G30 (3+) 28-30 mbar	734 g/h
		G31 (3+) 37 mbar	722 g/h
Electric supply:	220-240 V ~ 50-60 Hz		
Appliance category:	II2H3+		
Gas connection:	G 1/2"		
Appliance class:	3		

9.3 Gas burners for NATURAL GAS G20 20 mbar

BURNER	NORMAL POWER kW	MINIMUM POWER kW	INJECTOR MARK
Multi Crown	3,5	1,75	146
Semi-rapid	1,9	0,7	96x
Auxiliary	1,0	0,38	76X

9.4 Gas burners for LPG G30/G31 28-30/37 mbar

BURNER	NORMAL POWER kW	MINIMUM POWER kW	INJECTOR MARK	NOMINAL GAS FLOW g/h	
				G30 28-30 mbar	G31 37 mbar
Multi Crown	3,4	1,8	095	247	243
Semi-rapid	1,9	0,75	71	138	136
Auxiliary	1,0	0,47	50	73	71

10. ENERGY EFFICIENCY

10.1 Product information according to EU 66/2014

Model identification		HVB95450IB
Type of hob		Built-in hob
Number of gas burners		5
Energy efficiency per gas burner (EE gas burner)	Left rear - Semi-rapid	58.9%
	Right rear - Semi-rapid	58.9%
	Middle - Multi Crown	53.1%
	Left front - Semi-rapid	54.7%
	Right front - Auxiliary	not applicable
Energy efficiency for the gas hob (EE gas hob)		56.4%

EN 30-2-1: Domestic cooking appliances burning gas - Part 2-1 : Rational use of energy - General

10.2 Energy saving

- Before use, make sure that the burners and pan supports are assembled correctly.
- Use cookware with diameters applicable to the size of burners.
- Center the pot on the burner.
- When you heat up water, use only the amount you need.
- If it is possible, always put the lids on the cookware.
- When the liquid starts to boil, turn down the flame to barely simmer the liquid.

- If it is possible, use a pressure cooker. Refer to its user manual.

11. ENVIRONMENTAL CONCERNS

Recycle materials with the symbol . Put the packaging in relevant containers to recycle it. Help protect the environment and human health by recycling waste of electrical and electronic appliances. Do not dispose of appliances marked with the symbol  with the household waste. Return the product to your local recycling facility or contact your municipal office.

Electrolux Appliances AB - Contact Address: Al. Powstańców Śląskich 26, 30-570 Kraków, Poland

www.aeg.com/shop



867345691-J-042022

CE

AEG