gorenje

EN GB IE

INSTRUCTIONS FOR USE

OF A BUILT-IN OVEN

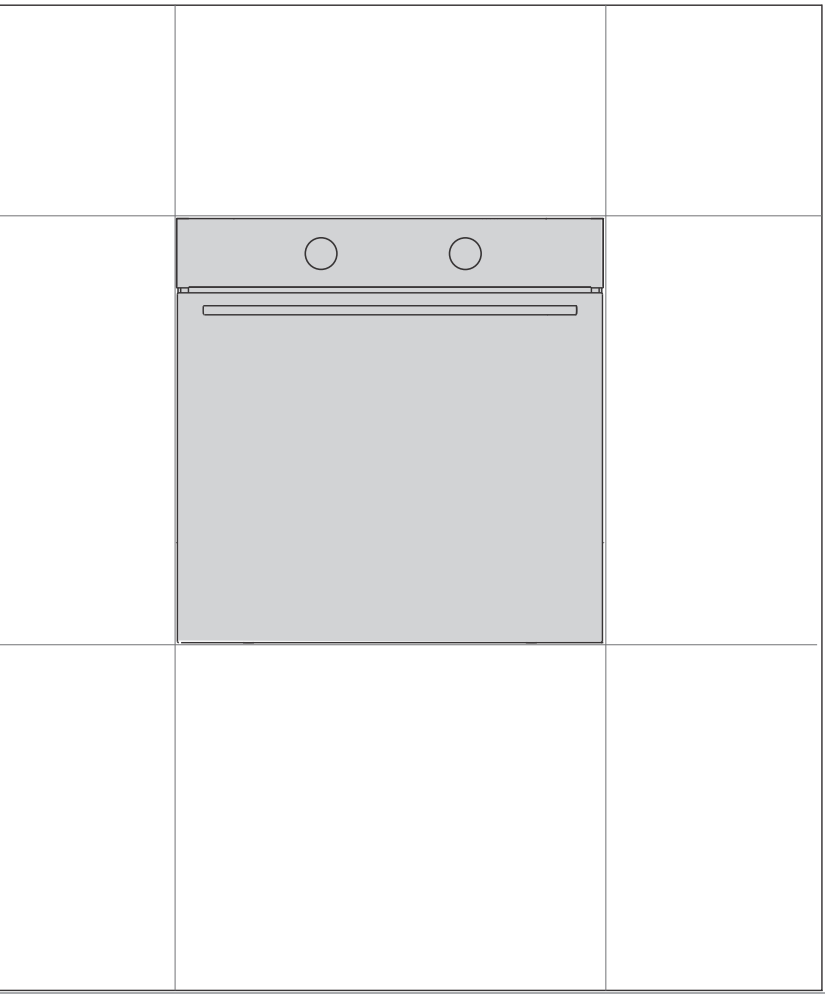

We thank you for your trust and the purchase of our appliance.

This detailed instruction manual is supplied to make the use of this product easier. The instructions should allow you to learn about your new appliance as quickly as possible.

Make sure you have received an undamaged appliance. If you do find transport damage, please contact the seller from which you purchased the appliance, or the regional warehouse from which it was supplied. The telephone number can be found on the invoice or on the delivery note.

Instructions for installation and connection are supplied on a separate sheet.

Instructions for use, installation and connection are also available at our website:

http://www.gorenje.com

The following symbols are used throughout the manual and they have the following meanings:

INFORMATION!
Information, advice, tip, or recommendation

WARNING!
Warning – general danger



It is important that you carefully read the instructions.

Contents

Safety precautions **4**

Other important safety warnings **6**

Built-in oven **7**
Appliance description 7
Appliance equipment 8

Using the appliance **12**
Before first use 12
Switching on for the first time 12
Choosing the settings 13
Starting the cooking process 18
End of cooking and switching off the oven 18

General tips and advice for baking **19**

Cooking table **20**

Cooking with a temperature probe **24**
Recommended doneness levels for different types of meat 25

Cleaning and maintenance **26**
Using the Aqua Clean program to clean the oven 27
Removing wire and fixed pull-out (extendible) guides 28
Removing and replacing the oven door and glass panes 29
Replacing the bulb 30

Troubleshooting table **31**
Special warnings and fault reporting 31

DISPOSAL **32**

Safety precautions



Carefully read the instructions and save them for future reference

Appliance must be connected to fixed wiring which has incorporated means of disconnection. Fixed wiring must be made in accordance with the wiring rules.

Means for disconnection must be incorporated in the fixed wiring in accordance with the wiring rules.

The appliance must not be installed behind a decorative door in order to avoid overheating.

If the supply cord is damaged, it must be replaced by the manufacturer, its service agent or similarly qualified persons in order to avoid a hazard (only for appliances supplied with connection cord).

During use the appliance becomes hot. Care should be taken to avoid touching the heating elements inside the oven.

This appliance can be used by children aged 8 years and above, and by persons with reduced physical, sensory or mental capabilities or lack of experience and knowledge, if they have been given supervision or instruction concerning the use of the appliance in a safe way, and if they understand the hazards involved. Children shall not play with the appliance. Cleaning and user maintenance shall not be done by children without supervision.

WARNING: Accessible parts may become hot during use. Young children should be kept away.

WARNING: The appliance and some of its accessible parts may become very hot during use. Care should be taken to avoid touching heating elements. Children less than 8 years of age shall be kept away unless continuously supervised.

The appliance is not intended to be controlled by external timers or separate remote controll system.

Only use the temperature probe recommended for use in this oven.

Do not use harsh abrasive cleaners or sharp metal scrapers to clean the oven door glass/ the glass of hinged lids of the hob (as appropriate), since they can scratch the surface, which may result in shattering of the glass.

Do not use steam cleaners or high-pressure cleaners to clean the appliance as this may result in an electric shock.

WARNING: Before replacing the light bulb, make sure the appliance has been disconnected from the mains power, in order to prevent the hazard of an electric shock.

Never pour water directly on the bottom of the oven cavity. Temperature differences could result in damage to the enamel coating.

Other important safety warnings

The appliance is intended for household use. Do not use it for any other purpose, such as room heating or drying of pets or other animals, paper, fabrics, herbs etc., as this may lead to injury or fire hazard.

Appliance must be connected to fixed wiring which has incorporated means of disconnection. Fixed wiring must be made in accordance with the wiring rules.

Do not lift the appliance by holding it by the door handle.

Oven door hinges may be damaged when under excessive load. Do not stand or sit on the open oven door, and do not lean against it. Also, do not place any heavy objects onto the oven door.

If the power cords of other appliances placed near this appliance get entangled in the oven door, they can be damaged, which in turn can result in a short circuit. Therefore, make sure the power cords of other appliances are always at a safe distance.

Oven door becomes very hot during operation. A third glass is installed for extra protection, reducing the temperature of the outside surface (only with some models).

Make sure the vents are never covered or obstructed in any other way.

Do not line the oven cavity with aluminium foil, and do not place any baking trays or other cookware on the oven bottom. This would obstruct and reduce air circulation in the oven, slow down the baking process, and destroy the enamel coating.

We recommend you avoid opening the oven door during baking, as this increases power consumption and increases condensate accumulation.

At the end of the baking process, and during baking, be careful when opening the oven door, as there is danger of scalding.

To prevent limescale accumulation, leave the oven door open after baking or using the oven, to allow the oven cavity to cool down to room temperature.

Clean the oven when it has completely cooled down.

Eventual mismatches in colour shades between different appliances or components within a single design line may occur due to various factors, such as different angles under which the appliances are observed, different coloured backgrounds, materials, and room illumination.

Never pour water onto the oven cavity bottom. Temperature differences could result in damage to the enamel coating.

⚠ WARNING!
Carefully read the instructions for use before connecting the appliance. Repair or any warranty claim resulting from incorrect connection or use of the appliance shall not be covered by the warranty.

Built-in oven

Appliance description

INFORMATION!
Appliance functions and equipment depend on the model.

Basic equipment of your appliance includes wire guides, shallow baking sheet, and a grid.

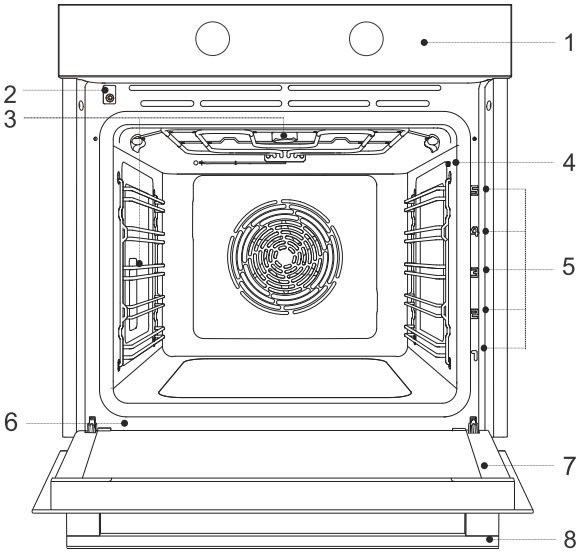

1 Control unit
2 Door switch
3 Lighting
4 Temperature probe socket
5 Guides – cooking levels
6 Rating plate
7 Oven door
8 Door handle

Rating plate – product information

A rating plate with basic information about the appliance is attached to the edge of the oven. Precise information on appliance type and model can also be found on the warranty sheet.

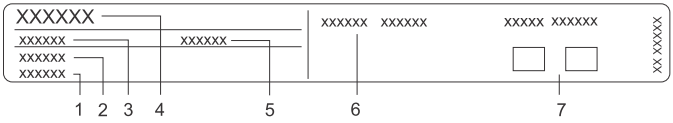

1 Serial number
2 Code/ID
3 Type
4 Brand
5 Model
6 Technical information
7 Compliance indications/symbols

Control unit
(depending on the model)

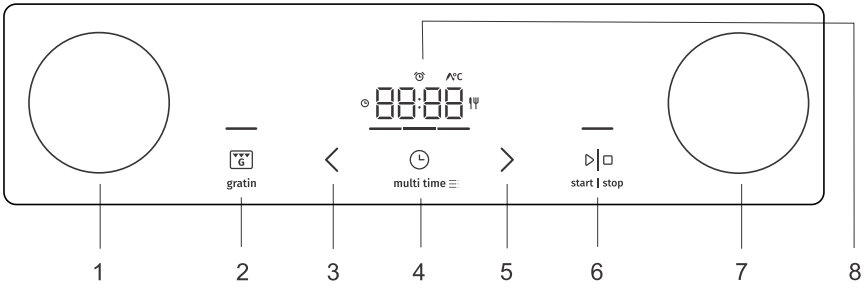

1. Cooking system selector knob
2. Gratin key (gratin)
3. Value decrease key
4. Timer function and settings key
5. Value increase key
6. Start I stop key to start or pause a program
7. Temperature settings knob
8. Display unit

INFORMATION!
For better key response, touch the keys with a larger area of your fingertip. Each time you press a key, this will be acknowledged by a short acoustic signal.

Push-pull knobs
(depending on the model)

Slightly push the knob until it pops out; then, rotate it.

WARNING!
After each use, rotate the knob back to the "off" position and push it back in. The push-pull knob can only be pushed back when the switch is in the "off" position.

Appliance equipment

Guides

- The guides allow cooking or baking on 5 rack levels.
- The height levels of guides into which the racks can be inserted, shall be counted from bottom up.
- Guide levels 4 and 5 are intended for grilling/broiling.
- When inserting equipment, it should be correctly rotated.
- Always push the equipment all the way into the appliance.

Wire guides

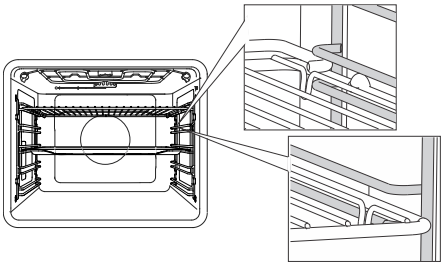

In case of wire guides, always insert the wire (grid) rack and the baking sheets into the slot between the upper and lower part of each guide level.

Fixed pull-out guides

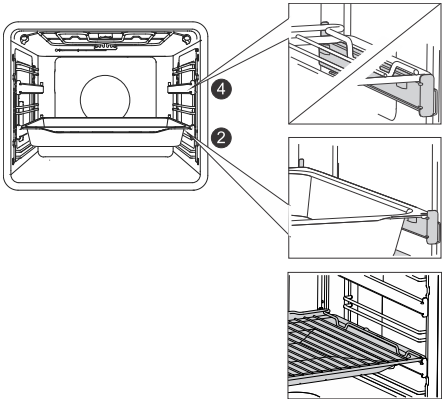

Pull-out guides may be fitted for the 2nd and 4th level.

IN case of fixed pull-out guides, place the rack or baking sheet onto the guide. You can place the wire rack directly onto a baking sheet (shallow or deep all-purpose baking sheet) and place both onto the same guide; in this case, the baking sheet acts as a drip tray.

Click-on pull-out guides
(depending on the model)

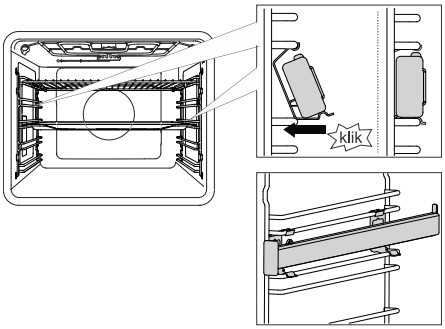

The click-on pull-out guide can be inserted into any space between two wire guides.
Place the guide symmetrically onto the wire guides on the left and the right side of the oven cavity. First, hook the upper clip of the guide under the wire of the wire guide. Then, press the lower clip into the right position until you hear a CLICK.

NOTE: The guides can be attached to any height between two levels of wire guides.

INFORMATION!
The click-on pull-out guides cannot be mounted onto guides with fixed double-level partial extension. They can, however, be mounted on to single-level partially extendible guides, to levels 3–4 and 4–5.

Make sure the pull-out guide is correctly rotated and that it extends outwards, i.e. out from the oven.

Oven door switch
(depending on the model)

If the oven door is opened during oven operation, the switch turns off the heater and fan in the oven cavity. When the door is closed, the switch turns the appliance operation back on.

Cooling fan
The appliance is fitted with a cooling fan that cools the housing, the door, and the appliance control unit. After the oven is switched off, the cooling fan continues to operate for a short while in order to cool down the oven.

Oven equipment and accessories



The **WIRE RACK** is used for grilling/broiling or as support for a pan, baking tray or baking dish with the food you are baking.

INFORMATION!
There is a safety latch on the grid. Therefore, the grid has to be lifted slightly at the front when pulling it out from the oven.

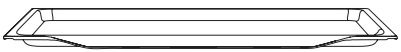

SHALLOW BAKING SHEET is used for flat and small pastry. It can also be used as a drip tray.

WARNING!
The shallow baking sheet may deform as it heats up in the oven. Once it cools down, it returns to the initial shape. Such deformation does not affect its function.

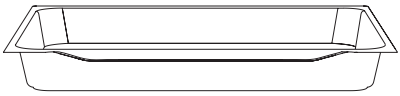

The **ALL-AROUND DEEP BAKING TRAY** is used for roasting vegetables and baking moist pastry. It can also be used as a drip tray.

INFORMATION!
Never insert the all-purpose (or universal) deep baking tray into the first guide during baking.



Temperature **PROBE(BAKESENSOR)**.

WARNING!
The appliance and some of the accessible parts tend to heat up during cooking.

Using the appliance

Before first use

- Remove oven accessories and any packaging (cardboard, polystyrene foam) from the oven.
- Wipe the oven accessories and interior with a damp cloth. Do not use abrasive or aggressive cloths or cleaners.
- Heat an empty oven for approximately one hour with the top and bottom heater system at a temperature of 250 °C. The characteristic "new oven scent" will be released; therefore, ventilate the room thoroughly during this process.

Switching on for the first time

After connecting your appliance to the power mains or after an extended power outage, 12:00 will appear on the display.

First, choose and confirm the basic settings.

INFORMATION!

To change them, touch the keys 〈 or 〉. Confirm the desired setting by pressing the **multi time** or **start I stop** key. The next setting can be adjusted once you have set and confirmed the preceding one.



1. CLOCK SETTING

Set the clock/time of day. First, set and confirm the minutes; then set and confirm the hours. If you press and hold the value adjustment key, the rate at which the set value is being changed will increase.

INFORMATION!

To set or adjust the clock later on, see chapter Extra functions.



2. DISPLAY DIMMER

High light intensity is the default setting. The sign **brh** and the currently set value for the display light intensity will appear on the display unit. Use the value setting keys to increase or decrease light intensity.



3. ACOUSTIC SIGNAL VOLUME

Medium volume is the default setting. The sign **Vol** and the currently set value for the acoustic signal volume will appear on the display unit. Use the value setting key to increase the acoustic signal volume or to switch it off.

When the selected settings are confirmed, the clock will appear on the display unit (if the operating system selection KNOB is in position 0).

Choosing the settings

CHOOSING THE COOKING SYSTEM

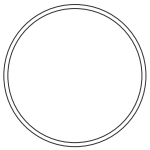

Rotate the KNOB (left and right) to select the COOKING SYSTEM (see program table).

INFORMATION!
Settings can also be changed during operation.

INFORMATION!
Appliance functions and equipment depend on the model.

Symbol	Use
	RAPID OVEN PREHEATING To reach the set temperature in the shortest possible time. When the oven heats up to the desired temperature, the heating process is completed. This is followed up by the system setting you wish to use to cook your food. This function is not suitable for cooking food.
	TOP AND BOTTOM HEATER WITH FAN[1)] For even baking of food on a single rack, and for making soufflés.
	LARGE GRILL WITH FAN[1)] For roasting poultry and larger cuts of meat under a broiler.
	INTENSIVE BAKING (AIR FRY)[1) 2)] This cooking method results in a crunchy crust without added fat. This is a healthy version of fast-food frying, with fewer calories in the cooked food. Suitable for smaller cuts of meat, fish, vegetables, and frozen products ready for frying (French fries, chicken nuggets). Steam injection results in better browning and more crunchiness of the surface..
	HOT AIR[1) 2)] Hot air allows better flow of hot air around the food. This way, it dries out the surface and creates a thicker crust. Use this system to cook meat, pastry and vegetables, and to dry food on a single rack or multiple racks simultaneously. Steam injection results in better browning and more crunchiness of the surface. Steam injection results in better browning and more crunchiness of the surface.
	TOP AND BOTTOM HEATER[1) 2)] Use this system for conventional baking on a single rack, making soufflés, and baking at low temperatures (slow cooking). Steam injection results in better browning and more crunchiness of the surface.
	LARGE GRILL[1)] Use this system to grill large amounts of flat-shaped food like toast, open sandwiches, grill sausages, fish, skewers etc., as well as for cooking au gratin and for browning the crust. The heaters mounted on the top of the oven cavity evenly heat the entire surface. Maximum allowed temperature is 240 °C.

Table continued from last page

Symbol	Use
	SLOW BAKING [3] For gentle, slow and even cooking of meat, fish and pastry on a single rack. This cooking method will leave the meat with a higher water content, making it juicier and more tender, while pastry will be evenly browned/baked. This system is used in the temperature range between 140 °C and 220 °C
	PIZZA SYSTEM [1] This system is optimal for baking pizza and pastry with higher water content. Use it to bake on a single rack, when you want the food to be done faster and to be crunchy.
	BAKING FROZEN FOOD [1] This method allows baking frozen food in a shorter period of time without pre-heating. Optimum for pre-baked frozen products (bakery products, croissants, lasagne, French fries, chicken nuggets), meat and vegetables.
	DEFROSTING Use this function for controlled defrosting of frozen food (cakes, pastry, bread, rolls, and deep-frozen fruit). During the defrosting process, turn the pieces of food over, stir the food, and separate any chunks that are frozen together. For microbiological safety, we recommend slowly defrosting meat and other delicate foods in the refrigerator.
	AQUA CLEAN This program makes it easier to remove any stains from inside the oven.
	OVEN LIGHT Oven light is switched on when a system is selected or when the knob is turned to the light position.

[1] *In these systems, it is possible to use the gratin function (see chapter Starting the cooking process).*

[2] *You can add steam to the baking process with these systems. The basic function will operate when the system is selected. By using a baking tray with water, the function is changed to baking with addition of steam (see chapter Start of operation).*

[3] *It is used for determining the energy efficiency class pursuant to the EN 60350-1 standard.*

SETTING THE COOKING TEMPERATURE

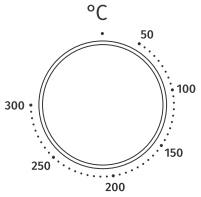

Rotate the knob to set the desired TEMPERATURE.

TIMER FUNCTIONS

First, rotate the COOKING SYSTEM SELECTOR KNOB; then, set the TEMPERATURE.



Timed cooking

In this mode, you can specify the duration of oven operation (cooking time).

Touch the **multi time** key. Symbol will appear on the display unit. Touch the ‹ or › to set the desired operating time. Touch the **start I stop** key to confirm your settings.
To start oven operation, touch the **start I stop** key.

Setting the delayed start

INFORMATION!
Delayed start cannot be set for the grill and grill with fan systems.

Use this function when you wish to start cooking the food in the oven after a certain period of time. Place the food into the oven, then set the system and temperature. Then, set the program duration and the time when you wish your food done.

Example:
Current time: noon
Cooking time: 2 hours
End of cooking: 6 pm

Touch the **multi time** key. The cooking duration symbol will appear on the display unit. Touch the ‹ or › to set program (cooking) duration (in our case, this is 2:00). Confirm the setting by pressing the **start I stop** key. Double-tap the **multi time** again to set the time when you wish your food done (in our case, this is 18:00, or 6 p.m.). Desired cooking end time will appear on the display unit (18:00). Touch the **start I stop** key to confirm the settings.

Touch the **start I stop** key to start baking.

While waiting to start operation, the oven is in a partial standby mode. The display is dimmed, and the fan system and oven lighting are on the entire time. The oven will switch on with the selected settings automatically (in our case at 16:00, or 4 p.m.). The oven will switch off at the set time (in our case, this is 18:00, or 6 p.m.).

INFORMATION!
Cooking end time and the clock will alternate on the display unit.

After the set time expires, the oven will automatically stop operating. Signs **End** and 00:00 will alternate on the display unit. An acoustic signal will be emitted, which you may turn off by touching any key. After one minute, the acoustic signal will be switched off automatically.

WARNING!
This function is not suitable for food requiring a preheated oven.

Perishable food should not be kept in the oven for a long time. Before using this mode, check whether the clock on the appliance is accurately set.

Minute minder setting
The minute minder can be used independently of oven operation. The longest possible setting is 24 hours. During the last 10 minutes, the minute minder is displayed in one-second steps. Touch the **multi time** twice (double-tap it) until the symbol appears on the display unit. Touch the 〈 or 〉 to set the minute minder.

INFORMATION!
If a delayed start is set, you can set the minute minder by triple-tapping the **multi time** key.

INFORMATION!
When setting a timer function, you can reset the value by simultaneously touching the keys 〈 and 〉. Confirm the setting by pressing the **start I stop** key.

INFORMATION!
The most recently used timer function values will be stored and offered as preset values the next time you use the timer. These settings may also be deactivated (see chapter Selecting extra functions, Adaptive function).

CHOOSING THE GENERAL SETTINGS

Turn the COOKING SYSTEM SELECTOR KNOB to position "0".

To activate a function, press the **multi time** key and hold it for 3 seconds. **SEtt** will appear on the display unit for a few seconds. Then, the extra functions menu will appear.



INFORMATION!
Use the 〈 or 〉 keys to navigate the menu. Confirm the setting by pressing the **start I stop** or **multi time** key. To exit the extra functions menu, touch the **gratin** key.



1. Clock displayed

Use the 〈 and 〉 keys to set the clock. **CLoc** will appear on the display unit. After you confirm, you can toggle between 12-hour and 24-hour display. Confirm, the set the clock/time of day. First, set and confirm the minutes; then set and confirm the hours.



2. Acoustic signal volume

Choose between three beep volume levels. Choose the **Vol** setting. Touch the 〈 or 〉 key to select the desired level, and confirm. Acoustic signals can also be switched off.



3. Display illumination

Choose between three levels of display light intensity. Choose the **brh** setting. Touch the 〈 or 〉 key to select the desired level, and confirm. Use the value setting keys to increase or decrease light intensity.



4. Display unit – night mode

This function will automatically dim the display (switch from high to the lowest display illumination level) during night time (8:00 p.m. to 6:00 a.m.) Choose the **nGht** setting. Touch the 〈 or 〉 key to select the desired night-time display illumination, and confirm.

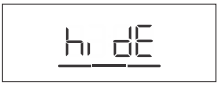

5. Standby

This function automatically switches the clock display on or off. Select the **hidE** setting. Touch the 〈 or 〉 key to select on or off, and confirm.

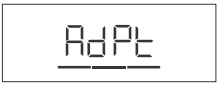

6. Adaptive function

This function allows adjusting the set cooking time. The function is deactivated as a factory default, but it can also be activated.
When the function is activated, the most recent cooking program duration settings are displayed. Values from the most recent cooking session will be used.
AdPt will appear on the display unit. To deactivate the function, touch the 〈 or 〉 key to select off. Follow the same procedure to re-activate the function. Select on on the display unit.



7. Factory settings

This function allows resetting the appliance to factory settings. **FAct** will appear on the display unit. Touch the 〈 or 〉 key to select rES to choose the factory settings, and confirm by pressing and holding the **start I stop** key. Hold the key until all lit dashes disappear.

⚠ **WARNING!**

After a power outage or after the appliance is switched off, additional function settings will remain stored for no more than a few minutes. Then, all settings, except for the acoustic signal volume and display dimmer will be reset to factory defaults.

Starting the cooking process

start | stop

The dash above the **start I stop** key is partially lit. Press this key to run the set program.
During program operation, the dash above the key will light more brightly (will be fully illuminated).

INFORMATION!
If no timer function is selected, cooking time will appear on the display unit. When the oven reaches the set temperature, an acoustic signal will be sounded and °C will appear on the display unit.

gratin

Extra gratin
The function can only be started after 10 minutes of oven operation (the dash above the gratin key will be partly/dimly lit). When the function is confirmed, cooking time 10 minutes (10:00) will appear on the display unit. Touch the 〈 or 〉 key to set the gratin duration.
The function can also be deactivated by pressing the **gratin** key.

The function is used in the last stage of baking or after the baking process when you add sauce (wet rub) or dry rub onto the food, or when you wish to additionally brown the crust. A golden-brown crust will form on the dish during the gratin process, which protects the food from drying out, while also imparting a more pleasant appearance and better flavour.

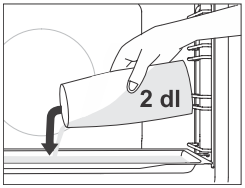

Baking with addition of steam
In systems **with addition of steam**, insert the shallow baking sheet in the first-level guide, while the oven is still cool. Pour a maximum of 2 dl of water onto the baking sheet. Place the food to be cooked on the second level and start the system.

INFORMATION!
If you are using a deep baking tray, insert it one level higher than specified in the recommended settings table.
For optimum operation of the function, do not open the oven door and do not add water during the cooking process.

End of cooking and switching off the oven

Press the **start I stop** key to pause the cooking process. **End** appears on display unit and an acoustic signal is emitted.

Turn the COOKING SYSTEM SELECTOR KNOB to position "0".

INFORMATION!
After the cooking process, all timer settings are also stopped and deleted, except for the minute minder. Time of day (clock) will be displayed.

After the use of the oven, some water may be left in the condensate channel (underneath the door). Wipe the channel with a sponge or a cloth.

General tips and advice for baking

- Remove all unnecessary equipment from the oven during baking
- Use equipment made of heat-resistant non-reflective materials (supplied baking sheets, trays, and dishes, enamel-coated cookware, tempered glass cookware). Bright-coloured materials (stainless steel or aluminium) materials reflect heat. As a result, thermal processing of food in them is less effective.
- Always insert the baking sheets and trays to the end of the guides. When baking on the wire rack, place the baking dishes or trays in the middle of the rack.
- For optimum food preparation, we recommend observing the guidelines specified in the cooking table. Choose the lower specified temperature and the shortest specified cooking time. When this time expires, check the results and then adjust the settings as necessary.
- Unless it is absolutely necessary, do not open the oven door during baking.
- Do not place the baking trays directly onto the oven cavity bottom.
- Do not use the all-purpose deep baking tray on the 1st guide level while the appliance is operating.
- Do not cover the oven cavity bottom or the wire rack with aluminium foil.
- With longer cooking programs, you can switch off the oven approximately 10 minutes before the end of cooking time to make use of the accumulated heat.
- Always place the baking dishes onto the wire rack.
- When baking on several levels at the same time, insert the all-purpose deep baking tray into the lower level.
- When cooking according to recipes from older cookbooks, use the bottom and top heater system (as in conventional ovens) and set the temperature 10 °C lower than specified in the recipe.
- If you are using parchment paper, make sure it is resistant to high-temperatures. Always trim it accordingly. Parchment paper prevents the food from sticking to the baking sheet and makes it easier to remove the food from the baking sheet.
- When cooking larger cuts of meat or pastry with higher water content, a lot of steam will be generated inside the oven, which in turn may condense on the oven door. This is a normal phenomenon which will not affect the operation of the appliance. After the cooking process, wipe the door and the door glass dry.
- When baking directly on the wire rack, insert the all-purpose deep tray one level lower to serve as a drip tray.
- **Rapid preheating of the oven:** Only preheat the oven if required by the recipe of in the tables in these instructions for use. If you are using the rapid preheating function, do not insert the food into the oven until the oven is fully heated. Temperature has a substantial effect on the final result. Rapid preheating is recommended for delicate cuts of meat (sirloin), and for yeast-leavened and sponge dough that require a shorter baking time. Heating an empty oven consumes a lot of energy. Therefore, if possible, we recommend cooking several dishes in succession, or making several dishes simultaneously.
  Dishes that require a fully pre-heated oven are indicated with one asterisk in the table * , while dishes for which a 5-minute preheat will suffice are indicated with two asterisks ** . In this case, do not use the rapid preheat mode.
- **GentleBake:** Allows slow and controlled cooking at a low temperature. The meat juices are distributed evenly, and the meat remains juicy and tender. The GentleBake slow cooking method is suitable for delicate boneless meat cuts. Before slow cooking, sear the meat thoroughly from all sides in a frying pan.

Cooking table

Dish			°C	min
PASTRY AND BAKERY PRODUCTS				
Pastry/cakes in moulds				
Sponge cake	3		160	30-40
pie with filling	2		180	60-70
marble cake	2		170-180	50-60
cake with leavened dough, Gugelhupf (Bundt cake, pound cake)	2		170-180	45-55
open pie, tart	3		170-180	35-45
brownies	2		170-180	30-35
pastry on baking trays and sheets				
strudel	2		180-190	60-70
strudel, frozen	2		200-210	34-45
sponge roll	3	+ baking tray with water	170-180	13-18
Buchteln	2		180-190	30-40
biscuits, cookies				
cupcakes	3		160 *	25-35
cupcakes, 2 levels	2, 4		155-165 *	30-40
yeast-leavened small pastry	2		180 *	17-22
yeast-leavened small pastry, 2 levels	2, 4		160 *	18-25
puff pastry	2		200 *	15-20
puff pastry, 2 levels	2, 4		170 *	25-30
cookies/biscuits				
piped cookies	3		150 *	30-40
piped cookies, 2 levels	2, 4		150 *	30-40
piped cookies, 3 levels	1, 3, 5		145 *	40-50
cookies/biscuits	3		160-170 *	15-20
biscuits, 2 levels	2, 4		150-160 *	20-25
meringue	3		80-100 *	120-150
meringue, 2 levels	2, 4		80-100 *	120-150
macarons	3		130-140 *	15-20
macarons, 2 levels	2, 4		130-140 *	15-20

Table continued from last page

Dish			°C	min
bread				
rising and proofing	2		40-45	30-45
bread on a baking sheet	2	+ baking tray with water	190-200	40-55
bread on a baking sheet, 2 levels	2, 4		190-200 *	40-55
bread in a tin	1		190-200	30-45
bread in a tin, 2 levels	2, 4		200-210	30-45
flatbread (focaccia)	2		270	15-25
fresh bread rolls (Semmel/morning rolls)	3	+ baking tray with water	200-210	10-15
fresh bread rolls (Semmel/morning rolls), 2 levels	2, 4		200-210 *	15-20
toasted bread	5		240	4-6
open sandwiches	5		240	3-5
pizza and other dishes				
pizza	1		300 *	4-7
pizza, 2 rack levels	2, 4		210-220 *	25-30
frozen pizza	2		200-220	10-20
frozen pizza, 2 levels	2, 4		200-220	10-20
savoury pie, quiche	2		190-200	50-60
burek	2		180-190	40-50
MEAT				
beef and veal				
beef roast (loin, rump), 1.5 kg	2		160-170	130-160
boiled beef, 1.5 kg	2		200-210	90-120
sirloin, medium done, 1 kg	2		170-190 *	40-60
beef roast, slow cooked	2		120-140 *	250-300
beef steaks, well done, thickness 4 cm	4		220-230	25-30
burgers, thickness 3 cm	4		220-230	25-35
veal roast, 1.5 kg	2		160-170	120-150
pork				
pork roast, rump, 1.5 kg	3		170-180	100-130
pork roast, shoulder, 1.5 kg	3		180-190	120-150
pork loin, 400 g	2		80-100 *	80-100

Table continued from last page

Dish			°C	min
pork roast, slow cooked	2		100-120 *	200-230
pork ribs, slow cooked	2		120-140 *	210-240
pork chops, thickness 3 cm	4		220-230	20-25
poultry				
poultry, 1.2 - 2.0 kg	2		200-220	60-80
poultry with stuffing, 1.5 kg	2		170-180	80-100
poultry, breast	2		170-180	45-60
chicken thighs	3		210-220	25-40
chicken wings	4		210-220	20-35
poultry, breast, slow cooked	3		100-120 *	60-90
meat dishes				
meat loaf, 1 kg	2		170-180	60-70
grill sausages, bratwurst	4		230 **	8-15
FISH AND SEAFOOD				
whole fish, 350 g	4		230-240	12-20
fish fillet, thickness 1 cm	4		220-230	8-12
fish steak, thickness 2cm	4		220-230	10-15
scallops	4		230 *	5-10
shrimps	4		230 *	3-10
VEGETABLES				
baked potatoes, wedges	3		210-220 *	30-40
baked potatoes, halved	3	+ baking tray with water	200-210 *	40-50
stuffed potato (jacket potato)	3		190-200	30-40
French fries, home-made	4		210-220 *	20-30
mixed vegetables, wedges	3	+ baking tray with water	190-200	30-40
stuffed vegetables	3		190-200	30-40
CONVENTIONAL PRODUCTS – FROZEN				
French fries	3		210-220	20-25
French fries, 2 levels	2, 4		190-210	30-40
Chicken medallions	4		210-220 *	12-17
Fish fingers	2		210-220	15-20
lasagne, 400 g	2		200-210	30-40
diced vegetables	2		190-200	20-30

Table continued from last page

Dish			°C	min
croissants	3		170-180	18-23
BAKED PUDDINGS, SOUFFLÉS AND DISHES AU GRATIN				
potato moussaka	2		180-190	35-45
lasagne	2		180-190	35-45
sweet baked pudding	2		160-180	40-60
sweet soufflé	2		160-180 *	35-45
dishes au gratin	3		170-190	30-45
stuffed tortillas, enchiladas	2		180-200	20-35
grilling cheese	4		240 **	6-9
OTHER				
preservation	2		180	30
sterilization	3		125	30
cooking in a bain-marie (double boiler)	2		150-170 *	/
reheating	3		60-95	/
plate warming	2		75	15

Cooking with a temperature probe (BAKESENSOR)

(depending on the model)

The temperature probe allows for accurate monitoring of the core temperature of the food during cooking.

WARNING!
The temperature probe should not be in direct vicinity of the heating elements.

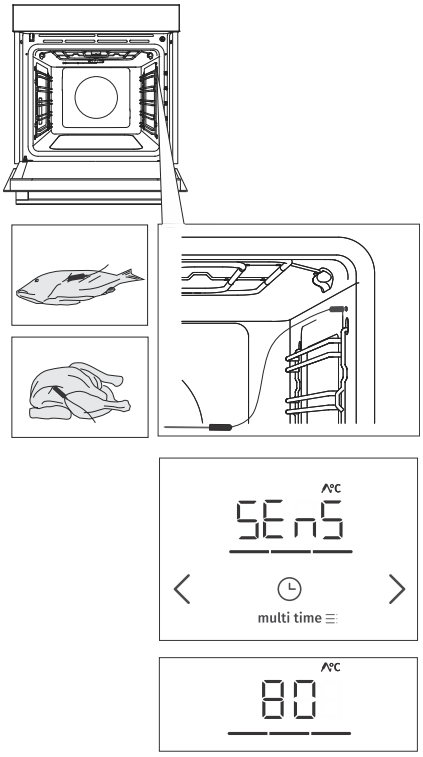

1 Stick the metal end of the probe into the thickest part of the food.

2 Plug the probe plug into the socket located in the upper-right corner at the front of the oven cavity (see figure). **SEnS** will appear on the display unit.

NOTE: When you insert the probe into the socket, the preset functions on the oven are deleted.

3 Choose the desired system and cooking temperature (in the temperature range of up to 230 °C). Probe operation symbol and the preset temperature will appear on the display unit. To change the temperature, use the 〈 or 〉 key. Select the desired final core temperature of the food (in the temperature range between 30 and 99 °C).

NOTE: When using the probe, setting the cooking time is not possible.

4 Confirm the setting by pressing the **start I stop** key.

5 When the set core temperature is reached, the oven will stop operating. **End** will appear on the display unit. An acoustic signal will be heard which you may turn off by touching any key. After one minute, the acoustic signal will be switched off automatically.

INFORMATION!
During the cooking process, set and current food core temperature alternate on the display unit. You may change the cooking temperature or the target food core temperature during the cooking process. Confirm the setting by touching the **start I stop** key.

Correct use of the probe, by type of food:

- poultry: stick the probe in the thickest part of the breast;
- red meat: stick the probe into a lean part that is not marbled with fat;
- smaller chunks with bone: stick them into an area along the bone;
- fish: stick the probe behind the head, towards the spine.

WARNING!
After use, carefully remove the probe from the food, unplug from the socket in the oven cavity, and clean it.

INFORMATION!
If you do not use the probe, remove it from the oven.

Recommended doneness levels for different types of meat

Type of food	blue (raw)	medium rare	medium	medium well	well done
BEEF					
beef, roast	46-48	48-52	53-58	59-65	68-73
beef, sirloin	45-48	49-53	54-57	58-62	63-66
roast beef/rump steak	45-48	49-53	54-57	58-62	63-66
burgers	49-52	54-57	60-63	66-68	71-74
VEAL					
veal, sirloin	45-48	49-53	54-57	58-62	63-66
veal, rump	45-48	49-53	54-57	58-62	63-66
PORK					
roast, neck	/	/	/	65-70	75-85
pork, loin	/	/	/	60-69	/
meat loaf	/	/	/	/	80-85
LAMB					
lamb	/	60-65	66-71	72-76	77-80
MUTTON					
mutton	/	60-65	66-71	72-76	77-80
GOAT MEAT					
goat	/	60-65	66-71	72-76	77-80
POULTRY					
poultry, whole	/	/	/	/	82-90
poultry, breast	/	/	/	/	62-65
FISH AND SEAFOOD					
trout	/	/	/	62-65	/
tuna	/	/	/	55-60	/
salmon	/	/	/	52-55	/

Cleaning and maintenance

WARNING!
Before cleaning, unplug the appliance from the power mains and wait for the appliance to cool down.

Children should not clean the appliance or perform maintenance tasks without proper supervision.

For easier cleaning, oven cavity and baking tray and sheet are coated with special enamel for a smooth and resistant surface.

Regularly clean the appliance and use warm water and hand dishwashing liquid to remove larger impurities and limescale. Use a clean soft cloth or sponge cloth.

Appliance exterior: use hot soapsuds and a soft cloth to remove impurities, then wipe the surfaces dry.

Appliance interior: for stubborn dirt and grime, use conventional oven cleaners. When using such cleaners, thoroughly wipe the appliance with a wet cloth to remove all cleaner residue.

Accessories and guides: clean with hot soapsuds and a damp cloth. For stubborn dirt and grime, we recommend prior soaking and use of a brush.

If the cleaning results are not satisfactory, repeat the cleaning process.

INFORMATION!
Never use aggressive or abrasive cleaners and accessories (abrasive sponges and detergents, stain and rust removers, scrapers for glass ceramic plates).

Oven equipment is dishwasher-safe.

Food residue (fat, sugar, protein) can ignite during the use of the appliance. Therefore, remove larger chunks of dirt from the oven interior and accessories before each use.

Using the Aqua Clean program to clean the oven

This program makes it easier to remove any stains from inside the oven.
The function is the most effective if used regularly, after each use.
Before running the cleaning program, remove all large visible chunks of dirt and food residues from the oven cavity.

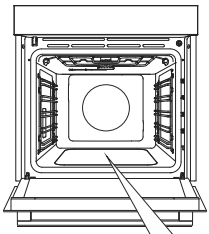

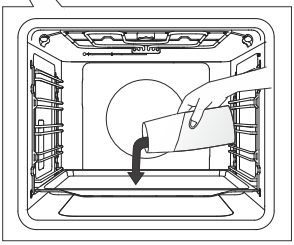

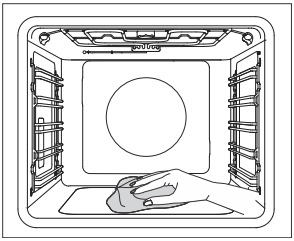

1 Insert the shallow baking sheet into the first guide level and pour 0.4 litres of hot water into it.

2 Turn the COOKING SYSTEM SELECTOR KNOB to Aqua Clean. Set the TEMPERATURE KNOB to 80 °C.

3 Let the program operate for half an hour.

4 When the program is completed, carefully remove the baking sheet, using oven mitts (there can still be some water on the baking sheet). Wipe down the stains with damp cloth and soapsuds. Thoroughly wipe the appliance with a wet cloth to remove all cleaner residue.

INFORMATION!
If the cleaning process is not successful (in case of particularly stubborn dirt), repeat it.

WARNING!
Use the Aqua Clean system when the oven has fully cooled down.

Removing wire and fixed pull-out (extendible) guides

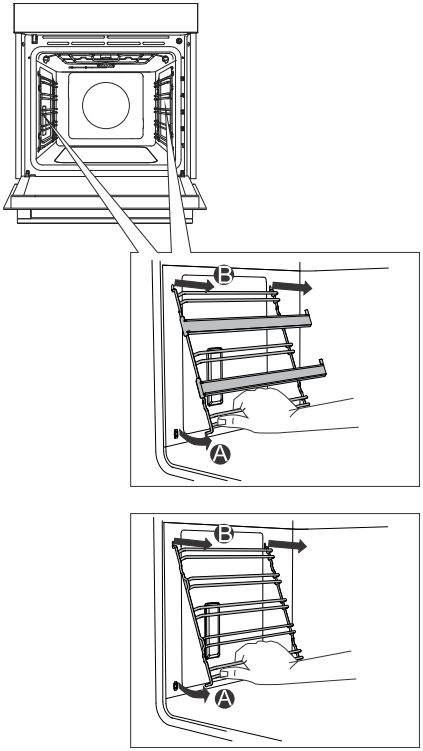

A Hold the guides by the bottom side and pull them towards the center of the oven cavity.

B Remove them from the openings at the top.

INFORMATION!
When removing the guides, take care not to damage the enamel coating.

Removing and replacing the oven door and glass panes

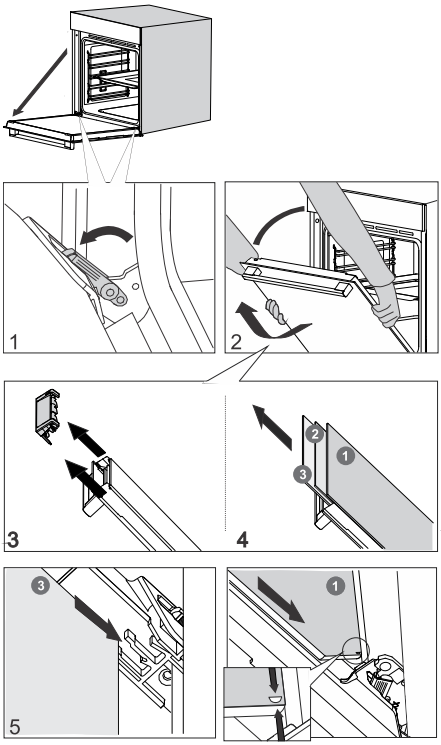

1 First, fully open the door (as far as it will go).

2 Oven door is attached to the hinges with special supports that also include safety levers. Rotate the safety levers towards the door by 90°. Slowly close the door to a 45° angle (relative to the position of the fully closed door); then, lift the door and pull it out.

Oven **door glass pane** can be cleaned from the inside, but it has to be removed from the appliance door first. First, proceed as described under item 2, but do not remove it.

3 Remove the air guide. Hold it on the left- and right-hand side of the door with your hands. Remove it by slightly pulling it towards you.

4 Hold the door glass at the upper edge and remove it. To the same for the second and third glass pane (depending on the model).

5 To replace the glass panes, observe the reverse order.

INFORMATION!
To replace the door, follow the reverse order. If the door does not open or close properly, make sure the notches on the hinges are aligned with the hinge beds.

WARNING!
The oven door hinge can close with considerable force. Therefore, always rotate both safety levers to the support when fitting or removing the appliance door.

Soft door closing and opening
(depending on the model)

Oven door is fitted with a system that dampens the door closing force, starting at the 75-degree angle. It allows simple, quiet, and gentle opening and closing of the door. A gentle push (to a 15° angle relative to the closed door position) is enough for the door to close automatically and softly.

WARNING!
If the force applied to close the door is too strong, the effect of the system is reduced or the system will be bypassed for safety.

Replacing the bulb

The bulb is a consumable and therefore not covered by warranty. Before replacing the bulb, remove all accessories from the oven.

Halogen lamp: G9, 230 V, 25 W

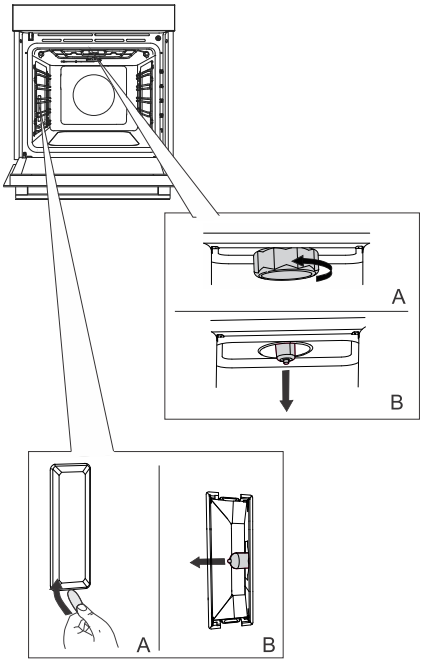

1 Unscrew and remove the cover (in anti-clockwise direction). Remove the halogen bulb.

2 Use a flat plastic tool to remove the cover. Remove the halogen bulb.

INFORMATION!
Take care not to damage the enamel coating.
Use protection to avoid burning yourself.

WARNING!
Only replace the light bulb when the appliance is disconnected from power supply.

Troubleshooting table

Special warnings and fault reporting

During the warranty period, only a service center authorized by the manufacturer may carry out any repairs.

Before making any repairs, make sure the appliance is disconnected from the power mains either by removing the fuse or by disconnecting the power plug from the wall outlet.

Any unauthorized repairs of the appliance may result in electric shock and short circuit hazard; therefore, do not perform them. Leave such work to an expert or a service technician.

In case of minor problems with appliance operation, check this manual to see if you can fix the problem yourself.

If the appliance is not operating properly or at all due to inappropriate operation or handling, a visit from a service technician shall not be free of charge, even during the warranty period.

Save the instructions for future reference and pass them on to any subsequent owners or users of the appliance.

Following is some advice on rectifying some common problems.

Problem/error	Cause
The main fuse in your home trips often.	Call a service technician.
The oven lighting does not work.	The process of changing the light bulb in the oven is described in the chapter Replacing the bulb.
Control unit is not responding, the screen is frozen.	Disconnect the appliance from the power mains for a few minutes (undo the fuse or switch off the main switch); then, reconnect the appliance and switch it on.
Error code ErrX is displayed. **In case of a double-digit error code, ErXX will be displayed.**	There is an error in the electronic module operation. Disconnect the appliance from the power mains for a few minutes. If the error is still indicated, call a service technician.

If the problems persist despite observing the above advice, call an authorized service technician. Repair or any warranty claim resulting from incorrect connection or use of the appliance shall not be covered by the warranty. In this case, the user will cover the cost of repair.

DISPOSAL



Our product packaging is made of environmentally friendly materials that can be recycled, disposed of, or destroyed without any hazard to the environment. To this end, packaging materials are labelled appropriately.

The symbol on the product or its packaging indicates that the product should not be treated as normal household waste. Take the product to an authorized collection centre for waste electric and electronic equipment processing.

Correct **disposal** of the product will help prevent any negative effects on the environment and health of people, which could occur in case of incorrect product removal. For detailed information on removal and processing of the product, please contact the relevant municipal body in charge of waste management, your waste disposal service, or the store where you bought the product.

We reserve the right to any changes and errors in the instructions for use.

Your notes

Your notes

Your notes

gorenje

Made in Slovenia
BOS6737E09X
BOSX6737E09BG
BO6737E02X

843372-a10