nilox

e-bike J1+

INFORMATION

Before taking your first ride, read this Owner's Manual carefully and familiarise yourself with your Nilox e-bike.

For your own safety and a longer service life for your e-bike, follow the instructions and warning notices in this manual.

Disregarding them may lead to damage to the e-bike or personal injury.

nilox J1+



All information in this publication is based on the latest production information available at the time of approval for printing. The manufacturer reserves the right to make changes at any time without notice and without incurring any obligation.

No part of this publication may be reproduced without written permission.

The vehicle shown in this user manual may not match the actual vehicle.

DEAR CUSTOMER:

Thank you for purchasing this Nilox e-bike.
This e-bike is a product manufactured by using advanced equipment and made up of high-quality component parts.

This manual provides detailed information about the correct operation, maintenance and adjustment of your e-bike. By following these tips your unit will be more durable.

The manufacturer hereby begs your understanding in case of any inconsistence between the content (pictures or verbal descriptions) of this manual and the actual condition of your vehicle due to possible changes in the specifications.

Please read this manual carefully to ensure safety and maximum ease of use.
We remain wishing you all the best with your vehicle.

PRODUCT INFORMATION

Nilox recommends that you use genuine Nilox parts, conversion parts and accessories that have been specifically approved for your e-bike.

Nilox tests genuine parts and conversion parts and accessories that have been specifically approved for your e-bike for their reliability, safety and suitability.

Despite ongoing market research, Nilox is unable to assess other parts. Therefore, Nilox accepts no responsibility for the use of such parts in Nilox e-bikes. This is also the case, even if they have been independently or officially approved. The use of non-approved parts could affect the safety of your e-bike.

Genuine Nilox parts, approved conversion parts and accessories are available from Nilox dealers. Here, you will receive advice about permissible technical modifications, and the parts will be professionally fitted.

OWNER'S MANUAL

General notes

Before taking your first ride, read this Owner's Manual carefully and familiarise yourself with your e-bike.

For your own safety and a longer service life for your e-bike, follow the instructions and warning notices in this manual. Disregarding them may lead to damage to the e-bike or personal injury.

Equipment

This Owner's Manual describes all models and all standard and optional equipment available for your e-bike at the time of publication of the Owner's Manual. Countryspecific differences are possible. Note that your e-bike may not be fitted with all features described.

This is also the case for systems and functions relevant to safety.

Therefore, the equipment on your e-bike may differ from that in the descriptions and illustrations. Should you have any questions concerning equipment and operation, please consult a Nilox dealer.

The following items are included in the e-bike scope of delivery:

- charger
- printed Owner's Manual

OPERATING SAFETY

Important safety notes

⚠ WARNING

Components can be damaged without it being visible on the surface:

- in the event of an accident or fall
- if the bike tips over

Components damaged in this way could fail unexpectedly, for example:

- the handlebars or the seat post could break while you are riding the bike.
- the brakes could fail.

There is a risk of accident and injury.
In this or similar cases, have the e-bike checked at a qualified specialist workshop without delay.

⚠ WARNING

When being used, the mechanical components of the e-bike are subjected to high
loads and wear. Components react differently to these loads and show signs of fatigue or wear at different rates. If the operating life of a component is exceeded, the component could suddenly fail. There is a risk of accident and injury.

- Have your e-bike checked regularly at a qualified specialist workshop.
- Pay attention to any sign of cracks, scratches or changes in colour. These signs indicate that the component has reached the end of its operating life.
- Have components showing signs of wear or fatigue replaced at a qualified specialist workshop.

The components affected are:

- Handlebars and stem
- Saddle and seat post
- Frame and fork
- Tires and wheels
- Pedals and pedal cranks
- Brakes
- Chain and gear
- Battery

If work on electronic equipment and its software is carried out incorrectly, this equipment could stop functioning. The electronic systems are linked together by interfaces. Modifications to electronic systems may also cause systems that have not been modified to malfunction. These malfunctions could affect the operating safety of your e-bike and therefore also have a considerable effect on your safety. You should therefore have all work and modifications to electronic components carried out at a qualified specialist workshop.

Do not make any modifications or carry out work, such as drilling, soldering or welding, on the frame or other load-bearing components. The stability and the service life of the components could be affected as a result. If you remove warning stickers, you or others may not be aware of possible dangers.

Leave warning stickers in position.

Rotating components, such as wheels, chain, pedal cranks or pedals, could trap and pull in parts of the body or clothing. Make sure that neither clothing nor objects being carried get caught in rotating parts.

Wear close-fitting clothing. Never wear a scarf.

After braking, in particular after a long downhill stretch, the brake rubbers,

brake system as well as quick-release devices and axle nuts may be very hot. Wait until these components have cooled down be-fore touching them.
Do not ride without the battery or without the control console. If the battery or the control console are not fitted then the lighting system will not function. Riding without an operational lighting system is not permitted, depending on national regulations.

Qualified specialist workshop
A qualified specialist workshop has the necessary special skills, tools and qualifications to correctly carry out any necessary work on your e-bike. This particularly applies to work relevant to safety.
Always have the following work on your e-bike carried out at a qualified specialist workshop:

- work relevant to safety
- service and maintenance work
- repair work
- modifications, installations and conversions
- work on electronic components
- work on the drive system

Nilox recommends that you use a Nilox dealer which is qualified to carry out work on Nilox e-bikes.

Correct use
Observe the following information when using the e-bike:

- the safety notes in the printed Owner's Manual
- the technical data in the printed Owner's Manual
- traffic rules and regulations
- laws and safety standards applicable to vehicles

The configuration of your Nilox e-bike can vary, depending on the country in which you purchased it. Using the e-bike in other countries could therefore contravene local laws. If necessary, have the configuration of the e-bike adjusted for the respective country.

Observe the respective applicable law in your country for Pedelecs regarding the following points:

- maximum assistance speed and power output of the electric motor
- required equipment in order to ride on public roads
- obligation to have a driver's license
- minimum age of the cyclist
- obligation to wear a helmet
- regulations for the use of cycle lanes

The Nilox e-bike is designed to be ridden on asphalt roads and lanes as well as surfaced forest and country tracks. The tires must not lose contact with the ground when doing so. The e-bike is not designed for riding over obstacles, such as high kerbs.

Equally, it is not designed for carrying more than one person. Nobody should be carried on the optionally available luggage carrier.

The Nilox e-bike is not suitable for competition.The Nilox e-bike together with rider, accessories and luggage may have a permissible gross weight of 140 kg (308 lbs). Never exceed the permissible gross weight.

The Nilox e-bike is not approved for towing

a trailer. Riding with a trailer or a trailer bike or pulling another bicycle using a bicycle connection system is not permitted.
Always make sure that your Nilox e-bike is used for the purposes it was designed for. If the Nilox e-bike is used in ways for which it was not designed, this could result in damage to the fitted components. This could then lead to accidents and injuries. The Nilox e-bike is not intended for persons with limited physical, sensory or mental abilities. The e-bike is not suitable for children under 14 years old.
Taking the battery for your Nilox e-bike on a passenger plane is not permitted.
Transporting the e-bike with the battery fitted on a vehicle rear-mounted cycle rack or roof carrier is not permitted. Remove the battery before transporting.
Before transporting also remove components which are not securely bolted on such as, e.g. the control console, smartphone and net pockets.

E-BIKE

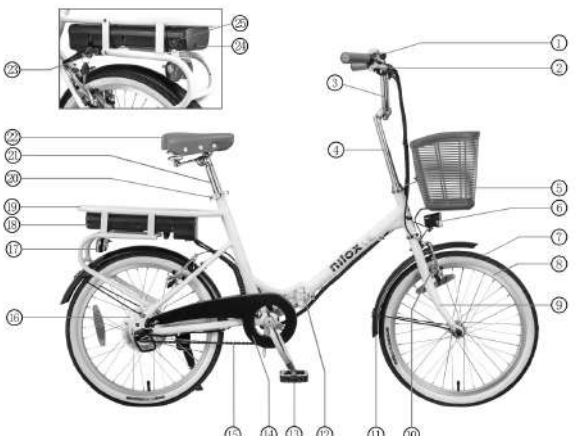

① Display
② Brake lever
③ Handle bar
④ Handle stem
⑤ Basket
⑥ Front light
⑦ Tyre
⑧ Rim
⑨ Fork
⑩ V-brake
⑪ Fender
⑫ Frame folding release
⑬ Pedals
⑭ Chainwheel cover
⑮ Chain
⑯ Motor
⑰ Rear light
⑱ Lithium battery
⑲ Rear carrier
⑳ Seat post quick release
㉑ Seat post
㉒ Saddle
㉓ Battery keyhole
㉔ Battery charging port
㉕ Battery On/Off button

ASSEMBLY AND SETTINGS

J1 Plus should reach you fully assembled, with the exclusion of the PEDALS, the FRONT FENDER, the SADDLE, the BASKET and the FRONT WHEEL, which are supplied separately. The handlebar must be correctly positioned and locked in place.

The front wheel arrives disassembled. To assemble it, loosen the nuts and washers at the ends of the hub and position it in its housing on the fork legs. Once in position, the nuts must be tightened on each side, making sure that the lock washer has its pin in the hole on the fork legs.



To assemble the front fender and the basket support, loosen the screw and the nut of the front light, position the basket bracket on the fork and proceed by screwing the bolt again, using the sequence as the picture.

Then, do the same with the two screws (one on each fork legs) of the fender support.

To assemble the basket, use the screw and the bracket as shown in picture. There are two bolts with a bracket in the bottom side of the basket and other two bolts on the backside of the basket that fixs it on a bracket near the stem.





Place the handlebar in a choosen position and firmly tighten the hex head socket screws.



The pedals will arrive disassembled and in a separate plastic bag. Carefully screw the pedals into the dedicated seat and tighten with the spanner supplied.



CAUTION: In order to avoid them coming loose during travel, the pedals (of all bicycles) have the characteristic feature of having the left pedal with opposite thread.
In practice, when you screw them in, you will need to do so in the opposite direction, as though you were unscrewing.

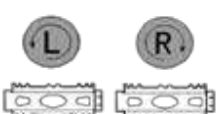

INSPECTION BEFORE STARTING A JOURNEY

Useful information

This Owner's Manual describes all models and all standard and optional equipment available for your e-bike at the time of publication of the Owner's Manual.
Country-specific differences are possible. Note that your e-bike may not be fitted with all features described. This is also the case for systems and functions relevant to safety.

Safety-relevant equipment

The lighting system does not work when you ride your e-bike without the control console or battery. Nilox recommends that you always ride with the lights on, even during the daytime.

The Nilox e-bike is equipped with a lighting system with the active and passive components required for use on public roads. It also has an appropriate brake system and a bell.
The lighting system includes the following components:

- headlamp and tail light
- reflective strips on the tire sidewalls
- yellow reflectors on the pedals Check

the safety equipment regularly and have it repaired at a qualified specialist workshop as needed.

Suitable equipment

Depending on the country in which you use your Nilox e-bike, you may be required to wear a helmet. Irrespective of any helmet law, Nilox recommends that you always wear a suitable helmet and goggles.

Wear conspicuous, bright clothing appropriate for cycling and shoes which are suitable for the bike's pedals. When riding in traffic, always be considerate and observe the traffic rules and regulations in order to avoid endangering yourself and others.

INSPECTION BEFORE STARTING A JOURNEY

Checking tires and wheels

⚠ WARNING

If seated at an angle, valves may break off while the e-bike is in operation. If this happens, the tire will suddenly lose pres-sure.

There is a risk of an accident.

Check the seating of the valves. The valves must extend from the wheel rim at right angles. Correct the position of any incorrectly seated valves immediately.

Before every ride, check the following:

- tires and wheels for damage and foreign bodies lodged in the tires. Damaged wheels can lead to a loss of pressure and result in further damage.
- tire tread depth
- true running of the wheels by allowing both wheels to rotate freely. Out-o-fround wheels can be an indication of tires which have burst at the side, broken axles or torn spokes. Also investigate any rattling noises and check bearings and bolted connections if necessary.

Checking the chain

⚠ WARNING

Inadequately secured chain gears and safety guards may become loose while the e-bike is in operation. Incorrectly aligned chain may become detached from the sprocket pack while the e-bike is in operation.

There is a risk of accident and injury.

- Before every ride, check to make sure the chain is properly aligned and

tensioned, and the gears are bolted securely.
- Also check for proper installation of the slip guard to prevent the chain jumping teeth or slipping.

Always follow all the instructions on handling the chain — particularly every time the rear wheel is removed or fitted. Extra caution is required in these cases in order to prevent damage to the chain.

Checking the battery lock

Before every ride, make sure the locking cylinder on the battery lock is engaged. If the battery is not retained by the lock, it could fall out while the e-bike is in operation.

Checking the operation of the brake system

Before every ride, carry out a stationary brake test. To do so, pull the brake levers towards the handlebar using two fingers and normal braking force. The brake lever must not come into contact with the handlebar. A distance must remain between the brake lever and the handle, even when maximum hand force is applied.

Checking the brake system for wear

⚠ **WARNING**

After braking, particularly during long descents, the brakes and tires as well as the quick-release connections and axle nuts may become extremely hot.
There is a risk of injury.
Wait until these components have cooled down before touching them.

Check the brake for wear before every ride.

Checking the bolted connections

Before every ride, check to make sure the bolted connections listed below are securely tightened:

- check the front and the rear wheel for proper fit. All bolted connections must be securely tightened. Alternate pushing and pulling on the rear wheel must not cause it to move.
- check to make sure the handles and brake handles are securely seated. It must not be possible to rotate the handles or brake handles.
- check to make sure the seat and
- seat post are securely locked. Attempts to turn and tilt the seat must not cause it to move.

ADJUSTING THE SEAT POSITION

Useful information

This Owner's Manual describes all models and all standard and optional equipment available for your e-bike at the time of publication of the Owner's Manual.
Country-specific differences are possible. Note that your e-bike may not be fitted with all features described. This is also the case for systems and functions relevant to safety.

Adjusting the seat position

Notes

The optimum seat position is an important factor for your well-being on the Nilox e-bike. A comfortable and fatigue-free seat position is an individual matter. Nilox gives you recommendations for the basic settings of the components below. The optimum setting may only become clear after going on a longer tour.
Adjust the settings of the following components to your requirements:

- adjust the seat height, angle and position
- adjust the angle of the grips
- adjust the angle and reach of the brake handles

To suit individual requirements, higher handlebars as well as additional seat post variants are available as accessories. The length of the seat post can be adjusted to your individual body size. Further details can be obtained from any Nilox Centre.

ADJUSTING THE SADDLE

Adjusting the saddle height

⚠ WARNING

If you pull the seat post too far out of the seat tube, then the clamp can no longer secure the seat post sufficiently. The seat post could come loose or break during the tour. There is a risk of accident and injury.
Do not pull out the seat post beyond the minimum insertion depth.
The seat post(1) must always be inserted at least into seat tube(3).

- Release the seat post clamp (2)
- Do not pull out seat post(1) beyond the minimum insertion depth.
- Adjust the saddle to the desired height. If you put your heel on the pedal when it is at its lowest point and your leg is fully stretched, then the saddle is at the correct height.
- Close the seat post clamp (2).

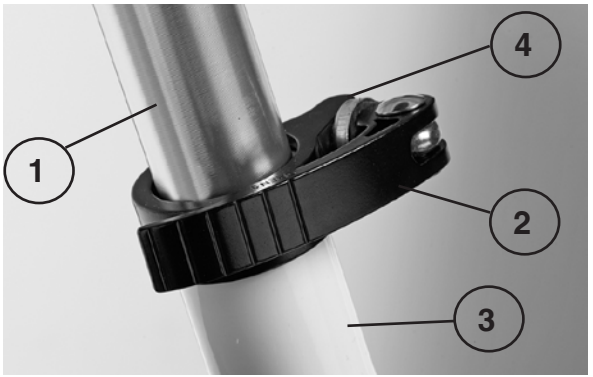



Insert the sleeve of the saddle in its housing and adjust the height and tilt, by turning the screws and quick-release terminals, as shown in the figure.

Adjusting the brake handles

The brake levers are made of aluminium alloy.

Next to the brake lever is a cylinder to adjust the tension of the wiring. V-brakes allow efficient braking on all surfaces. During braking, the electrical part of the motor is automatically disabled.

You can adjust the brake handles to match the position of the grips. If your fingers, when extended from the arm, rest on the brake levers then the brake handles are set correctly. The wrist should be as straight as possible when doing so.



Pedals

The pedals on your Nilox e-bike are suitable for closed shoes with hard soles. Touring cycling shoes which are equally suitable for cycling and walking are ideal.

DRIVING TIPS

Useful information

This Owner's Manual describes all models and all standard and optional equipment available for your e-bike at the time of publication of the Owner's Manual.
Country-specific differences are possible. Note that your e-bike may not be fitted with all features described. This is also the case for systems and functions relevant to safety.

Riding with electric assistance

⚠ WARNING

If pedal assist is activated on smooth or slippery road surfaces, the rear wheel can spin and lose grip when you accelerate. There is a risk of an accident.
Always deactivate pedal assist on smooth or slippery road surfaces.

The Nilox e-bike only assists you when you apply force to the pedals. When you stop pedalling, the electric motor switches off. Pedal assist will also switch off if you exceed the maximum power assist speed (varies according to country). The drive power depends on the drive level you have selected.
The higher the drive level, the less effort you yourself have to provide to maintain a specific speed.

Energy-saving driving style

Your Nilox e-bike assists you with a wheel hub motor integrated into the rear wheel.

The range of the Nilox e-bike with a fully charged battery depends on the following factors:

- the physical performance of the rider
- the drive and generator level s lected
- the gear selected
- the gross weight of the e-bike, rider and load
- the tire pressure
- the road surface
- the topography
- the temperature
- the wind conditions
- the nature of use with frequent starts or even-paced stretches

To achieve the maximum possible range, observe the following recommendations:

- select a drive level which is as low as possible and as high as necessary.
- to charge the battery during the tour, use generator mode as often as possible.
- select a low gear on an uphill gradient and a high gear on level ground or when riding downhill.
- do not carry any unnecessary weight.
- check the tire pressures regularly every 14 days and correct them when required.

Braking

Notes on V-brakes

⚠ **WARNING**

On wet roads:

- the frictional force between the tires and the road is reduced.

- water between the brake rubbers and the tire reduces the effect of the brake system.

The braking distance is increased. There is a risk of an accident.

- On wet roads brake sooner to compensate for the longer braking distance.
- On wet roads brake with greater care to prevent the wheels from locking.

⚠ **WARNING**

When braking the front wheel abruptly the rear wheel can lift up. You could be thrown over the handlebars in the process. There is a risk of an accident.

- Brake the e-bike with the front and rear brake at the same time.
- Move your body's centre of gravity to the rear when braking abruptly.

The Nilox e-bike is equipped with brakes which will bring you to a standstill quickly and safely, if required. The pedal assistance of the electric motor is interrupted by braking (or if you stop pedalling).

If you are not yet familiar with the braking effect of V-brakes, first carry out some test braking manoeuvres on a high-grip surface away from traffic. Avoid continuous braking. On a long downhill stretches, brake with both brakes briefly but firmly.

The J1 frame, as illustrated, can be folded.
A quick lock system permits fast folding to reduce size for easier J1 Plus transport. WARNING: FOLLOW THE INSTRUCTIONS TO LOCK THE FRAME. INCORRECT LOCKING COULD CAUSE LOSS OF J1 Plus CONTROL.



Operate on the fastening lever to lock and unlock the J1 Plus frame.



CHARGING THE BATTERY

Important safety notes

⚠ DANGER

High voltage is used to charge the battery. You could get an electric shock if the power cable or mains socket is damaged, wet or dirty. There is a risk of fatal injury.

- Only use the charger supplied to charge the battery.
- Only use a dry charger.
- Only use an undamaged power cable and charger. Immediately replace a damaged power cable and charger.
- Before connecting the charger cable, remove any foreign objects, such as dirt, ice or snow, from the charge socket.

⚠ WARNING

Using a charger other than the one supplied can cause the battery to overheat. There is a risk of explosion.
Only use the charger supplied to charge the battery.

⚠ WARNING

Deep battery discharge can cause an internal short circuit. The battery heats up to an extremely high temperature. There is a risk of fire.

- Avoid deep battery discharge during use as well as during storage.
- When not in use, fully charge the battery at regular intervals, and at least every 6 months.
- Do not carry a deeply discharged battery on the e-bike.
- Only use the battery for the Nilox e-bike.
- Do not expose the battery to storage temperatures below -10°C (14°F) and

above 45°C (113°F). Please note that temperatures above 45 °C (113°F) can occur around heaters, in direct sunlight or in overheated vehicle interiors.
- Do not use the charger in damp locations or in ambient temperatures below -10°C (14°F) or above 40°C (104°F).
- Do not immerse the battery into water.
- The battery and the charger do not have to be serviced. Do not try to disassemble or modify the battery or the charger. Do not subject the battery to a high pressure. Please note that high pressure can be applied as a result of load from heavy objects. You may not use a battery with a damaged casing.
- Keep the battery away from small children.
- If, while the battery is in use, is being charged or is in storage, you notice that the battery gets hot, develops a strong smell, alters in appearance or behaves abnormally in any way, stop using the battery immediately.

Heat develops when charging the battery:
- Make sure that there are no combustible materials close to the battery when charging.
- When charging, place the charger and battery on a non-combustible surface.
- If you charge the battery while it is still installed on the e-bike, position the bike in such way that a fire cannot spread.
- Do not charge the battery on carpeted floors.
- Do not cover the battery and charger during charging.

Notes on the charger

The charger supplied is suitable for a vol-

tage range of 240 V. The charger has no on/off switch. If you do not require the charger, disconnect the plug to save energy.

Notes on the battery

A deep battery discharge causes irreversible damage and capacity loss. If you do not use the battery for longer periods, charge the battery fully at regular intervals and at least every 6 months.

Please follow the instructions below to guarantee a long battery life:

- ideally, charge the battery at a room temperature of 20°C (68°F). Before charging, give the battery sufficient time to reach this temperature.
- avoid frequent full discharges. The battery prefers partial discharges. Lithium ion batteries do not have memory effect.
- brief discharges with subsequent charges can cause an inconsistency between the charge indicator and the battery charge level. After approximately 30 charges, allow the battery to completely discharge and then re-charge it. This will allow the charge indicator to be periodically calibrated to the battery charge level.

Every lithium-ion battery is subject to operational wear. Cell oxidation occurs as a result of use and ageing. The battery capacity decreases. The typical lifespan of a lithium-ion battery is between 2 and 3 years, regardless of whether it is used or not.

Connecting the charger

The battery (1) can be charged either on the bike or can be removed and charged separately.

When the battery is charged on the bike, the system can be switched on or off during charging.

- Connect the charger to charging port on battery (2).
- Connect the charger's mains plug to a socket. The LED on the charger unit will light with different colors depending on the current charge level. The LED will be red during charging and green when fully charged.
  To know the level of battery power check the charge indicator on the battery.
- First disconnect the cable connector of the battery and unplug the mains plug from the socket.

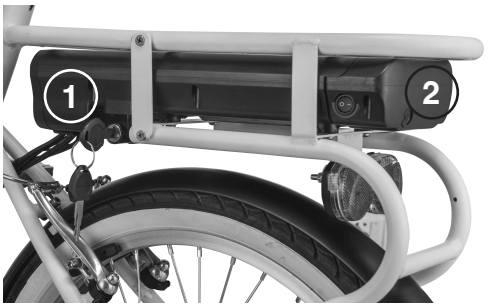

1. Battery
2. Charging port

REMOVING/FITTING THE BATTERY

Installing the battery

- Insert the battery in its housing as shown in the figure (1).
- The fitted battery will look as shown in the figure (2).

1

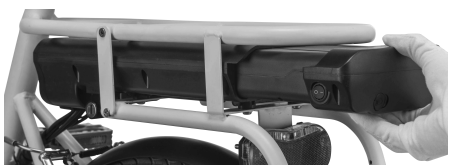

2



Removing the battery

Use the key to unlock the battery and remove it from his housing.

Storing the battery

⚠ WARNING

Deep battery discharge can cause an internal short circuit. The battery heats up to an extremely high temperature. There is a risk of fire.

- Avoid deep battery discharge during use as well as during storage.
- When not in use, fully charge the battery at regular intervals, and at least every 6 months.
- Do not carry a deeply discharged battery on the e-bike.

Please observe the following if you do not use the e-bike or the battery for long periods:

- do not store the battery at temperatures below -10°C (14°F) or above 45°C (113°F).
- do not expose the battery to temperature fluctuations. The ideal storage temperature is between 10°C (50°F) and 25°C (77°F).
- protect the battery from moisture to prevent corrosion around the electrical contacts. Store the battery in a dry place.
- do not store the battery near flammable materials.
- disconnect the battery from the charger between charging cycles.

Chain

Important safety notes

⚠ **WARNING**

If you install or handle the chain incorrectly, e.g. if you bend or twist it, you may cause damage that is not visible from out-side. This type of damage to the chain can cause it to tear unexpectedly, causing you to slip off the pedals. There is a risk of accident and injury.

- Handle the chain with utmost care and follow the instructions for use.
- Have a damaged chain replaced immediately at a qualified specialist workshop.

When handling the chain, avoid:

- kinking it in any direction
- twisting it
- turning it inside out
- reverse bending
- tying or binding it up with cable ties or cord
- using it as a tool
- mounting the chain by applying tension with a lever or by turning the foot pedal

Never use a chain that has been damaged.

Tires and wheels

The tires establish the contact with the road surface. They provide grip and traction and, depending on the tire pressure, absorb small bumps.

Although the wheels of your Nilox e-bike are manufactured with great care and delivered trued, this does not prevent the spokes from losing tension on the first kilometres.

For this reason, you should regularly inspect the tension of the spokes and have them re-centred by a Nilox dealer.

Tire pressure

⚠ **WARNING**

If the tire pressure drops repeatedly, inspect the tires for foreign objects. Check whether the tube or the valve is leaking. If the tire pressure is too low, the handling characteristics of the e-bike may be impaired and could cause you to fall. There is a risk of an accident.

- Always replace a damaged tube.
- Before mounting a new tube, remove all foreign objects from inside the tire.

Check the tire pressure regularly, at least every 14 days. Only correct tire pressures when the tires are cold. The pressure of warm tires should only be corrected if it is too low for the current operating conditions.

Warm tires always have higher pressures than cold ones.

The tire pressure changes by around 10 kPa (0.1 bar, 1.45 psi) for every 10°C (50°F) change in ambient temperature. If you measure the tire pressure in enclosed spaces where the temperature differs from

the outside temperature, you will have to correct the measured value accordingly.

When the e-bike is ridden, the tire temperature, and with it the tire pressure, will increase depending on the speed and the load on the tires.

Always check the tire pressure with suitable measuring equipment, e. g. a stand pump with a manometer. As your Nilox e-bike's tires are fitted with robust puncture protection made from plastic, you cannot check the pressure simply by pressing down on the tire with your thumb.

tire pressure specifications can be found in the "Technical data" section.

MAINTENANCE AND CARE

Cleaning and care

⚠ **WARNING**

Dispose of empty packaging and cleaning cloths in an environmentally responsible manner.

The value of your e-bike will be retained by regular and proper care. The best protection from harmful environmental influences is regular cleaning and preservation.

Nilox recommends performing a paint treatment twice a year (e.g. in spring and autumn).

- Use as little water as possible and keep water away from electrical contacts.
- Cover electrical contacts in the battery frame with the rubber cap.
- Clean the e-bike with a soft sponge or brush.
- Clean the battery frame with a damp cloth.
- After cleaning, check the electrical connectors and let the e-bike dry before using it.

MAINTENANCE

Regular work

Nilox recommends that you have the e-bike serviced once a year at a qualified specialist workshop.

Before each journey
• Check tires and wheels • Check the chain • Check the battery lock • Inspect the functioning of the brake system • Check bolt and screw connections

Every 300 - 500 km (186 - 310 miles)
• Check the chain for wear and correct tension/ routing • Remove dirt from the chain and derailleur • Check that all bolt and screw connections are fastened securely • Measure the braking system consume

Every 3000 km (1864 miles)

Check the following components and replace, if necessary:

- headset
- wheel hubs
- pedals
- chain
- gear cable

Once a year

- Check torques of all screw and bolt connections.
- Check gearshift, headset and brake settings
- Check the chain for correct tension and wear
- Check tires and wheels
- Check wear on parts subject to high stress

Work must be performed by a qualified specialist

TROUBLESHOOTING

Control console

Problem	Possible causes/consequences and Solutions
The system will not switch on, the display remains dark.	The battery is low or discharged. Check the charge level directly on the battery, charge if necessary.
	The battery is not positioned correctly in the holder. Remove the battery and then reinstall
	If the problem persists despite taking these measures: Have the electrical system checked at a qualified specialist workshop.

Lighting system

Problem	Possible causes/consequences and Solutions
The lighting system is not working.	The battery is low or discharged. Check the charge level directly on the battery, charge if necessary.
	The electrical connectors have come loose. Check the electrical connectors.
	If the problem persists despite taking these measures: Have the electrical system checked at a qualified specialist workshop.

Battery

Problem	Possible causes/consequences and Solutions
The charge indicator on the control console is not showing that the battery is “full” even though a full battery charge has been performed.	The battery has been affected by the ambient temperature. The battery heats up during the charging procedure. Let the battery cool down and repeat the charging process. Follow the instructions for charging the battery.
The charge indicator on the control console is not reliably displaying the charge level.	Due to frequent and brief charging and discharging of the battery, the synchronisation between the charge indicator and the actual battery charge level cannot be calibrated. Perform a full discharge after approx. 30 charge cycles. This will calibrate the charge indicator to the charge level of the battery. The service life of the battery will not be affected by this.

Drive system/electric motor

Problem	Possible causes/consequences and Solutions
The system can be switched on but the electric motor does not provide any assistance.	The electrical connections on the handlebars or near the motor are not inserted correctly or have become detached. Check the electrical connections on the handlebars and near the motor and connect correctly, if required.
	If the problem persists despite taking these measures: Have the electrical system checked at a qualified specialist workshop.

Brake system

Problem	Possible causes/consequences and Solutions
Poor braking performance.	The brake was not bedded in. Bed in the brake
	The brake rubbers are fouled with oil. • Clean the brake rubber with alcohol. • Replace the brake rubbers.

Problem	Possible causes/consequences and Solutions
Poor braking performance, no defined actuation point.	Have the brake system check at a qualified specialist workshop.
The brake is making grinding noises during the journey.	There is dirt or water on the brake . Brake several times to remove any dirt and water from the brake and from the tire.
	The brake is not exactly aligned with the tire. Have the brake correctly aligned in a qualified specialist workshop.

Problem	Possible causes/consequences and Solutions
The brake squeaks when applied.	The brake is not exactly aligned with the tire. Have the brake correctly aligned in a qualified specialist workshop.
	There is insufficient tension in the spokes of the wheel. Have the tension of the spokes checked and corrected at a qualified specialist workshop.
	The wheel is not properly secured. Tighten the axle nuts and bolts of the dropouts on the front and rear wheels to the specified torque.

TECHNICAL DATA

BIKE

Max power	250 W
Max speed	25 Km/h
Speed level	3
Electric motor	Rear hub

Battery

Features	36V — 7.5 Ah lithium ions
Range	Up to 40 Km
Charging time	4h
Lifetime	800 cycles

Control Panel	4 buttons controller

TECHNICAL DATA

Body	Steel
Tires	20”
Brakes	V-brakes
Fork	Steel

TIRES AND WHEELS

Tires

The approved tires have been specially designed for pedelecs. The use of any other type of tire may result in increased rolling resistance and consequently in a reduced range. Furthermore, handling characteristics, resistance to flats and noise may be adversely affected.

Therefore, when replacing the tires, ensure that the new tires are of the same type and size with a suitable tread. If in doubt, contact your nearest Nilox de-aler.

The reflective strips on the tire sidewalls replace the spoke reflectors in accordance with legal requirements.

Observe the direction of rotation when fitting a tire. An arrow on the tire sidewall indicates the direction of rotation.

Further information on tires and wheels can be found in the “Operation” section (page 29).

Front and rear wheel

- Tires brand: WANDA
- Dimension inches: 20 x 1.75
- Pressure: 0.8/2.1 bar

Tire pressure

The unladen weight given is for the standard scope of delivery. Accessories and items of optional equipment increase the unladen weight and reduce the maximum payload.

King meter 790

User Manual

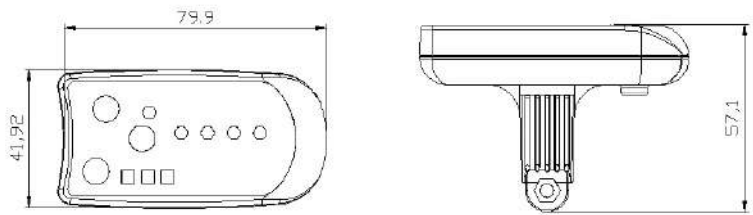

Display size((unit::mm))


Headlight ON/OFF
Battery indicator
Power
ON/OFF
Assist level
Assist level
control
6 Km/h

Battery indication

The four LED will indicate the current voltage of battery. When the battery is lack of voltage, the minimum power indicator will flash. But the controller will not power off.

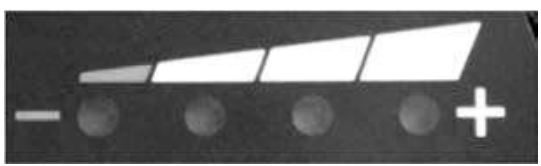

Battery power levels

Turn on/off headlight

Press the button "LIGHT" to turn on or off e-bike's headlight. When turn the headlight on, the indictor is on.
When turn headlight off, the indictor is black.



"LIGHT" button

Power levels

There are 3 levels of assistance to pedaling (PAS). As you pedal, press "MODE" button to select the various levels. Pedaling assistance it is minimum at level 1, maximum at level 3.



"MODE" button

Error Code

ASSIST LEVEL LIGHT	MEANING
First light flash	Current abnormality
Second light flash	Throttle abnormality
First two lights flash	Motor open-phase
Third light flash	Motor signal abnormality
First and third lights flash	Brake abnormality
All lights flash	Abnormal communication

Further information about Nilox vehicles can be found on the following website: http://www.nilox.com

Nilox reserves the right to make changes and improvements to any of the products described in this document without prior notice.

PRODUCT INFORMATION
Distributed by Esprinet Spa owner of the brand Nilox
Imported by Motocicli Italiani Srl
Made in China

Distributed by

nilox

Produced by

ITALMOTO