ThinkSmart

Hub 500 User Guide and Hardware Maintenance Manual

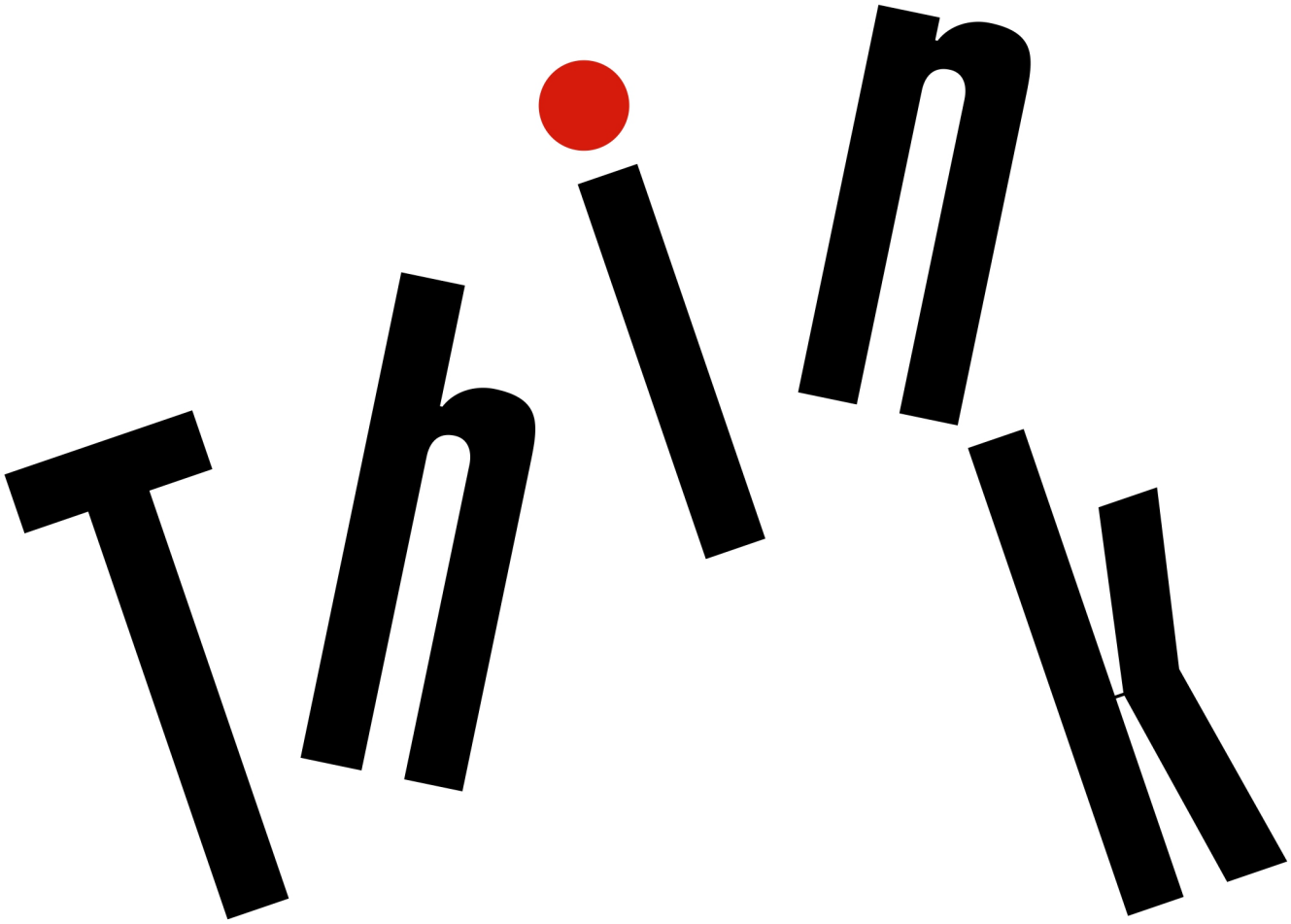

Lenovo

Machine Types: 10V5 and 10V6

Note: Before using this information and the product it supports, be sure to read and understand the *Important Product Information Guide* and Appendix A “Notices” on page 61.

Second Edition (July 2019)

© Copyright Lenovo 2018, 2019.

LIMITED AND RESTRICTED RIGHTS NOTICE: If data or software is delivered pursuant to a General Services Administration “GSA” contract, use, reproduction, or disclosure is subject to restrictions set forth in Contract No. GS-35F-05925.

Contents

Chapter 1. Overview 1
Front view 1
Right-side and left-side view 3
System board, Skype board, and video capture card 4
Machine type and model label 7

Chapter 2. Specifications 9

Chapter 3. Changing the administrator password and other settings 11

Chapter 4. Meeting console lock . . . 13
Attaching a Kensington-style cable lock 13

Chapter 5. Replacing hardware 15
Before replacing hardware 15
Knowing FRUs (including CRUs) 15
Locating FRUs (including CRUs) 16
Replacing the cable management door 18
Replacing the internal microphones 20
Removing the system cover 22
Replacing the video capture card 25
Replacing the Skype board 26
Replacing the Wi-Fi card 28
Replacing the system fan 32
Replacing the heat sink 33
Replacing the coin-cell battery 35
Replacing the microprocessor 37
Replacing the system board 41
Replacing a memory module 43
Replacing the M.2 solid-state drive 45
Replacing the LED board 47
Replacing the hinge pipe 50
Replacing the internal speakers 54
Replacing the infrared board 55
Replacing the Wi-Fi antennas 56
Completing the parts replacement 58

Appendix A. Notices 61

Appendix B. Trademarks 63

© Copyright Lenovo 2018, 2019

Chapter 1. Overview

This chapter provides basic information to help you get familiar with your meeting console.

Front view

Note: Your meeting console model might look slightly different from the illustration.

CAUTION:

Move the meeting console by holding the base instead of the hinge or the LCD panel.

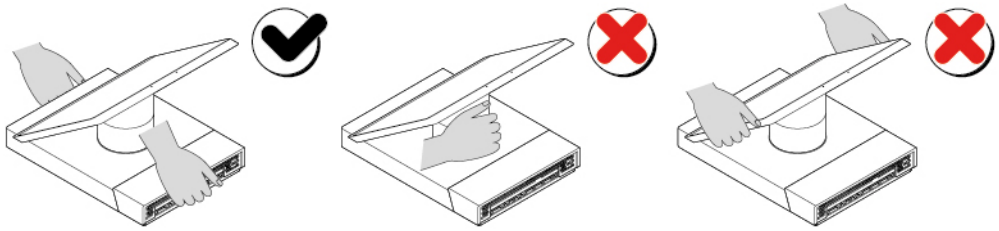

Figure 1. Moving the meeting console

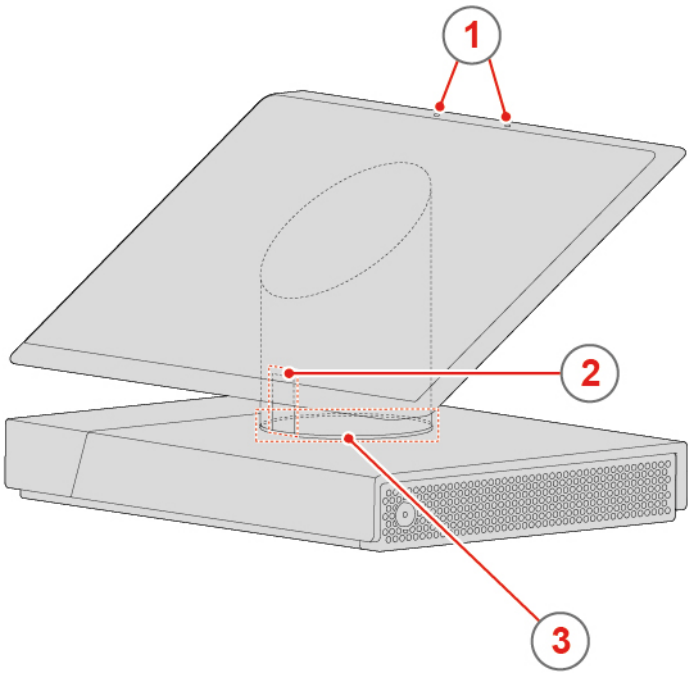

Figure 2. Front view

1 Internal microphones (2)	2 Motion sensor
3 System-status indicator (LED ring)	

© Copyright Lenovo 2018, 2019

1 Internal microphone

Used to amplify your voice in a meeting without using an external microphone.

2 Motion sensor

When the meeting console is on, the motion sensor can detect whether you are in front of the screen. When you exit a meeting and move away from the meeting console, the screen will dim after several minutes (determined by your settings). When you move in front of the dimmed screen, it will brighten automatically.

Note: The screen will also brighten when you tap it.

3 System-status indicator

The LED ring at the bottom of the hinge shows the system status of the meeting console.

- **Off:** The meeting console is off.
- **White light rotates and then is solid on:** You enter Microsoft Teams Rooms or Zoom Room System, or log in to Microsoft Teams Rooms or Zoom Room System successfully, or exit the meeting.
- **Solid white:** The meeting console is turned on or in the idle mode.
- **Solid green:** A meeting is in progress.
- **Solid red:** Your microphone is mute in a meeting.

Note: Only the basic behaviors of the LED ring are listed above.

Right-side and left-side view

Note: Your meeting console model might look slightly different from the illustration.

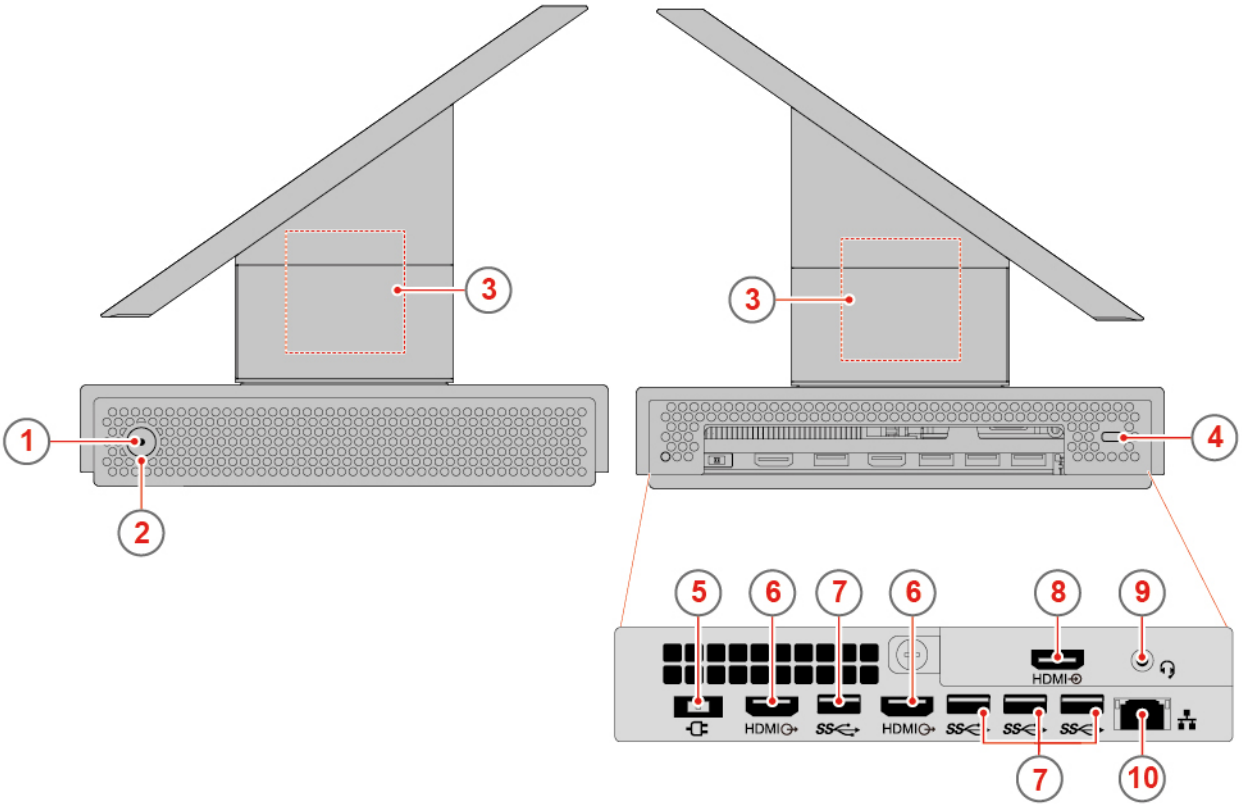

Figure 3. Right-side and left-side view

1 Power indicator	2 Power button
3 Internal speakers (2)	4 Security-lock slot
5 Power adapter connector	6 HDMI™ out connectors (2)
7 USB 3.1 Gen 1 connectors (4)	8 HDMI in connector
9 Headset connector	10 Ethernet connector

1 Power indicator

This indicator is on when the meeting console is on.

2 Power button

Used to turn on your meeting console. When you cannot shut down the meeting console from the operating system, press and hold the power button for four or more seconds to turn off the meeting console.

3 Internal speaker

Used to listen to the high-quality sounds from the meeting console without using a headset or headphones.

4 Security-lock slot

Used to secure a Kensington-style cable lock.

5 Power adapter connector

Used to connect the power adapter to the meeting console for power supply.

6 HDMI out connector

Used to send audio and video signals from the meeting console to another audio or video device, such as a high-performance monitor.

7 USB 3.1 Gen 1 connector

Used to connect a USB-compatible device. For optimal data transfer, connect a USB 3.1 Gen 1 device to a USB 3.1 Gen 2 or USB 3.1 Gen 1 connector instead of a USB 2.0 connector.

8 HDMI in connector

Used to receive audio and video signals from an external computer with HDMI signals output.

9 Headset connector

Used to connect a headset to the meeting console.

To enable the headset function, do the following:

For Microsoft Teams Rooms:

1. In the Skype mode, tap **Settings → Settings**.
2. Enter the default administrator password “sfb” and tap **Yes**.
3. Tap **Features**, and then select **Headset Microphone (Lenovo Hub500 Audio)** in the Microphone for Conferencing area.
4. Tap **Save and Exit**.

Note: The Bluetooth headset function can be enabled only in the administrator mode.

For Zoom Room System:

1. Tap **Settings → Microphone**.
2. Select **Headset Microphone (Lenovo Hub500 Audio)** in the Source area.
3. In the pop-up window, enter the default administrator password “00000”.

10 Ethernet connector

Used to connect an Ethernet cable for network access.

System board, Skype board, and video capture card

Note: See “Front view” on page 1 and “Right-side and left-side view” on page 3 for additional component descriptions.

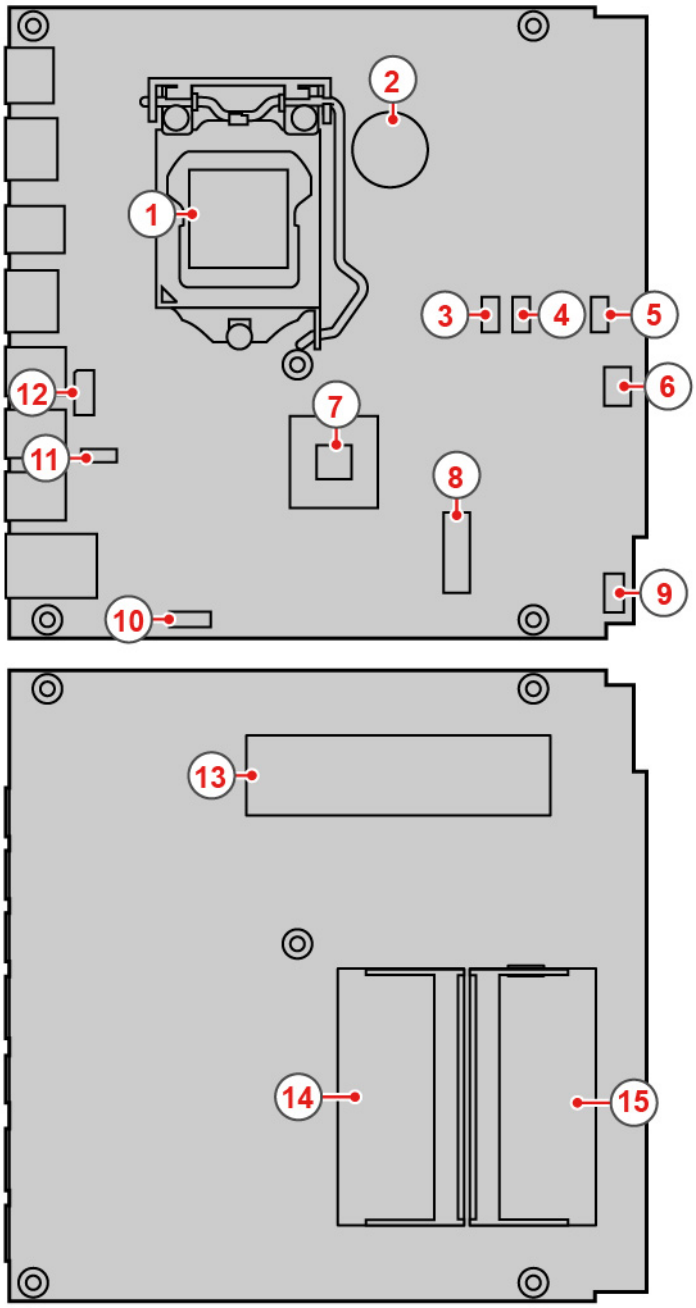

Figure 4. System board

1 Microprocessor socket	2 Coin-cell battery
3 System fan connector	4 Skype board I²C connector
5 Skype board USB 2.0 connector (for the motion sensor)	6 Skype board USB 2.0 connector (for audio signals)
7 PCH	8 M.2 Wi-Fi card slot
9 Power button board	10 Skype board power connector

11 Video capture module connector (connected to the video capture card)	12 Skype board DisplayPort® connector
13 M.2 solid-state drive slot	14 Memory slot (DIMM1)
15 Memory slot (DIMM2)	

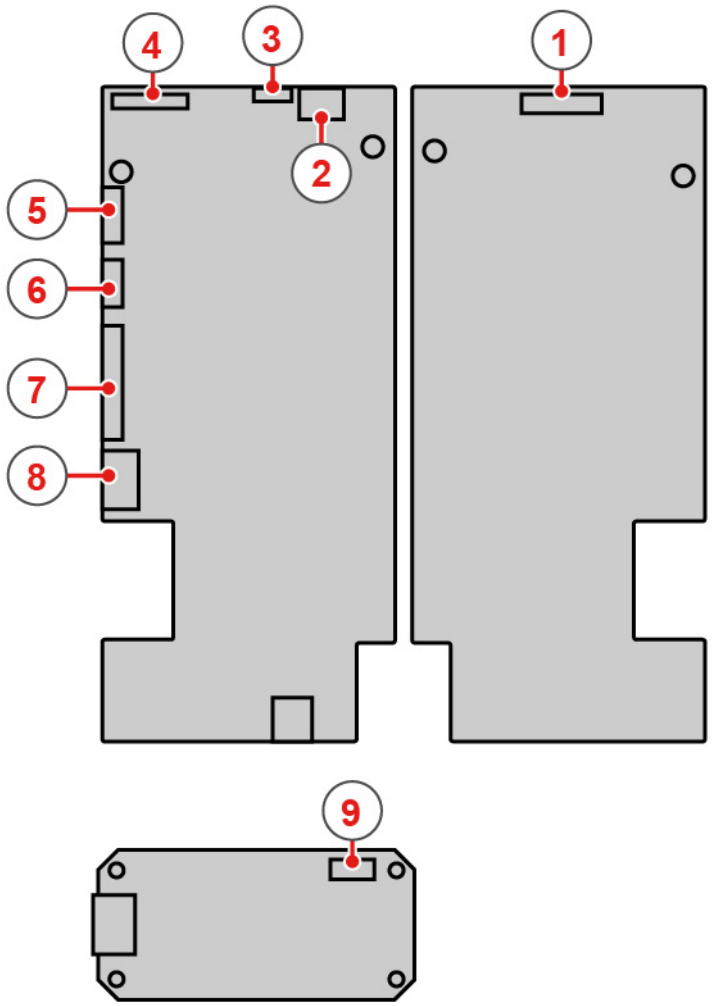

Figure 5. Skype board and video capture card

1 3-in-1 connector (connected to the integrated microphones, the LED board, and the motion sensor)	2 Internal speaker connector
3 Touch connector	4 Embedded DisplayPort connector
5 USB 2.0 connector (for audio signals and the motion sensor)	6 I^2C connector
7 DisplayPort connector	8 Power connector
9 Video capture module connector	

Machine type and model label

The machine type and model label identifies the meeting console. When you contact Lenovo for help, the machine type and model information helps support technicians to identify the meeting console and provide faster service. The machine type and model label is attached on the meeting console as shown.

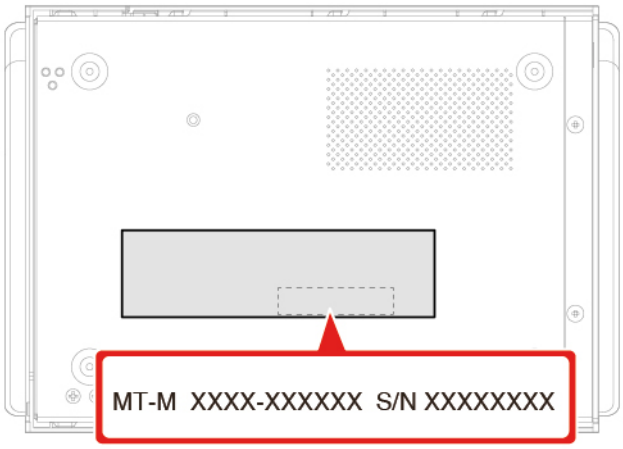

Figure 6. Machine type and model label

Chapter 2. Specifications

Power supply

- 90-watt automatic voltage-sensing power supply

Storage drives

- M.2 solid-state drive

Video features

- HDMI in connector
- HDMI out connector

Audio features

- Headset connector
- Internal microphones
- Internal speaker

Input/Output (I/O) features

- Audio connectors (headset)
- Display connectors (HDMI in and HDMI out)
- Ethernet connector
- USB 3.1 Gen 1 connector

Network features

- Ethernet LAN
- Wireless LAN
- Bluetooth

Physical dimensions

- Width: 280.0 mm (11.0 inches)
- Height: 180.0 mm (7.1 inches)
- Depth: 193 mm (7.6 inches)

Weight (without the package)

Maximum configuration as shipped: 2.5 kg (5.0 lb)

© Copyright Lenovo 2018, 2019

Chapter 3. Changing the administrator password and other settings

For Microsoft Teams Rooms

- Tap **Settings → Settings**.
- Enter the default administrator password “sfb” and tap **Yes**.
- Change the basic settings as desired.
- To change advanced settings, tap **Windows Settings → Go to Admin Sign-in**.
- Select the administrator mode and enter the administrator password again. Microsoft® Windows®user interface is displayed.
- Change the advanced settings as desired.
- To change the administrator password, tap the Start button to open the Start menu.
- Tap **Settings → Accounts → Sign-in options**, and then follow the on-screen instructions.
- To return to Microsoft Teams Rooms, restart the meeting console.

For Zoom Room System

- Tap **Settings**.
- Change the basic settings as desired.
- To change advanced settings, tap **Settings → Room → Windows Settings**.
- Enter the passcode “00000” and tap **Continue**.
- Select the ZoomRoomsAdmin mode and enter the administrator password. Microsoft® Windows® user interface is displayed.

  Note: Change the password from blank to your desired password before you log in the ZoomRoomsAdmin mode for the first time.
- Change the advanced settings as desired.
- To change the administrator password, tap the Start button to open the Start menu.
- Tap **Settings → Accounts → Sign-in options**, and then follow the on-screen instructions.
- To return to Zoom Room System, restart the meeting console.

© Copyright Lenovo 2018, 2019

Chapter 4. Meeting console lock

This chapter provides instructions on how to lock your meeting console with the locking device to keep your meeting console safe.

Attaching a Kensington-style cable lock

You can use a Kensington-style cable lock to secure your meeting console to a desk, table, or other nonpermanent fixture. The cable lock connects to the security-lock slot at the rear of your meeting console. Depending on the type selected, the cable lock can be operated with a key or combination. The cable lock also locks the buttons used to open the system cover. This is the same type of lock used with many notebook meeting consoles. You can order such a cable lock directly from Lenovo by searching for *Kensington* at:
http://www.lenovo.com/support

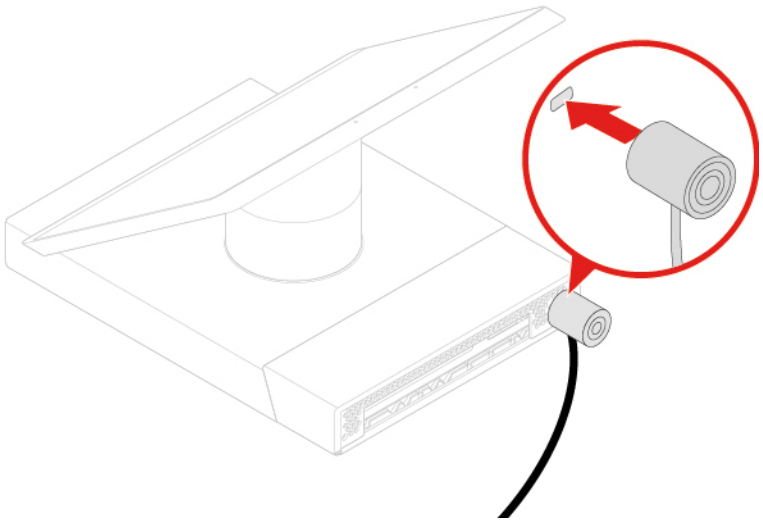

Figure 7. Attaching a Kensington-style cable lock

© Copyright Lenovo 2018, 2019

Chapter 5. Replacing hardware

This chapter provides instructions on how to replace hardware for your meeting console.

Before replacing hardware

Attention: Do not open your meeting console or attempt any repairs before reading this section and the *Important Product Information Guide*.

Notes before replacing hardware

- Use meeting console components provided only by Lenovo.
- When installing or replacing an option, use the appropriate instructions explained in this manual along with the instructions that come with the option.
- In most areas of the world, Lenovo requires the return of defective CRUs. Information about this will come with the CRU or will come a few days after the CRU arrives.

Handling static-sensitive devices

Do not open the static-protective package containing the new part until the defective part has been removed and you are ready to install the new part. Static electricity, although harmless to you, can seriously damage meeting console components and options.

When you handle options and other meeting console components, take these precautions to avoid static-electricity damage:

- Limit your movement. Movement can cause static electricity to build up around you.
- Always handle options and other meeting console components carefully. Handle PCI/PCIe cards, memory modules, system boards, and microprocessors by the edges. Never touch any exposed circuitry.
- Prevent others from touching the options and other meeting console components.
- Touch the static-protective package containing the part to a metal expansion-slot cover or other unpainted metal surface on the meeting console for at least two seconds. This reduces static electricity from the package and your body before you install or replace a new part.
- When possible, remove the new part from the static-protective package, and install it directly in the meeting console without setting the part down. When this is not possible, place the static-protective package on a smooth, level surface and place the part on the package.
- Do not place the part on the system cover or other metal surface.

Knowing FRUs (including CRUs)

- Field Replaceable Units (FRUs) are computer parts that a trained technician can upgrade or replace. FRUs include all CRUs. For detailed FRU information, such as the FRU part numbers and supported meeting console models, go to:
  http://www.lenovo.com/serviceparts-lookup
- Customer Replaceable Units (CRUs) are computer parts that a user can upgrade or replace.
  - Self-service CRUs: You can install self-service CRUs easily. These CRUs might be stand-alone, latched, or secured by up to two screws. Examples of self-service CRUs include the keyboard, mouse, any USB device. You are responsible for replacing all self-service CRUs.
  - Optional-service CRUs: Handling optional-service CRUs requires some technical skills and simple tools (such as a screwdriver). These CRUs are isolated parts within the computer. They are usually

© Copyright Lenovo 2018, 2019

concealed by an access panel that is secured by more than two screws. You must remove the screws and panel to access the specific CRU. Optional-service CRUs can be removed and installed by users or, during the warranty period, by a Lenovo service technician.

Before replacing FRUs

Before replacing any FRU, read the following:

- Only certified and trained personnel can service the meeting console.
- Before replacing an FRU, read the entire section about replacing the part.
- Be extremely careful during writing operations such as copying, saving, or formatting.

  The sequence of the drives in the meeting console that you are servicing might have been altered. If you select an incorrect drive, data or programs might be overwritten.
- Replace an FRU only with another FRU of the correct model.

  When you replace an FRU, ensure that the model of the machine and the FRU part number are correct.
- An FRU should not be replaced because of a single, unreproducible failure.

  Single failures can occur for a variety of reasons that have nothing to do with a hardware defect, such as cosmic radiation, electrostatic discharge, or software errors. Consider replacing an FRU only when a problem recurs. If you suspect that an FRU is defective, clear the error log and run the test again. If the error does not recur, do not replace the FRU.
- Only replace a defective FRU.

Locating FRUs (including CRUs)

Notes:

- Self-service CRUs: 10 and 11
- Some of the following components are optional.
- To replace a component that is not in the list below, contact a Lenovo service technician. For a list of Lenovo Support phone numbers, go to:
  http://www.lenovo.com/support/phone

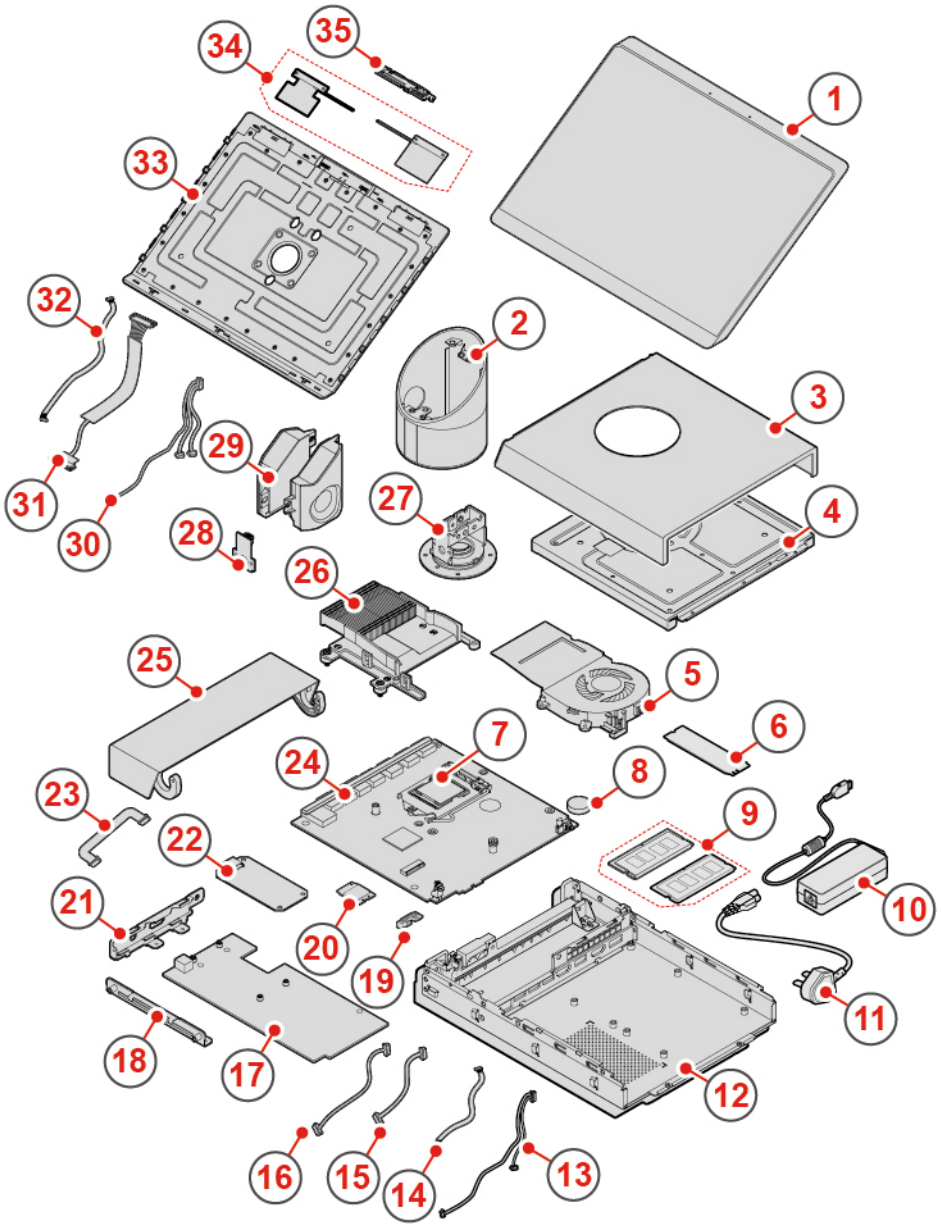

Figure 8. Locating FRUs (including CRUs)

1 Front panel	2 Hinge pipe
3 Upper cover	4 LED board
5 System fan	6 M.2 solid-state drive
7 Microprocessor	8 Coin-cell battery
9 Memory modules (2)	10 Power adapter
11 Power cord	12 Chassis
13 Skype board audio cable	14 Skype board I^2C cable
15 Skype board DisplayPort cable	16 Skype board power cable

17 Skype board	18 Skype board bracket
19 Wi-Fi card shield	20 Wi-Fi card
21 Skype board holder	22 Video capture card
23 Video capture module cable	24 System board
25 Cable management door	26 Heat sink
27 Hinge assembly	28 Infrared board
29 Internal speakers (2)	30 3-in-1 cable (connected to the integrated microphones, the LED board, and the motion sensor)
31 Embedded DisplayPort cable	32 Touch cable
33 Back cover	34 Wi-Fi antennas
35 Internal microphones	

Replacing the cable management door

Attention: Do not open your meeting console or attempt any repairs before reading the *Important Product Information Guide*.

1. Remove all connected devices, turn off the meeting console, and disconnect the power cord from the electrical outlet.
2. Unlock the Kensington-style cable lock.
3. Replace the cable management door.

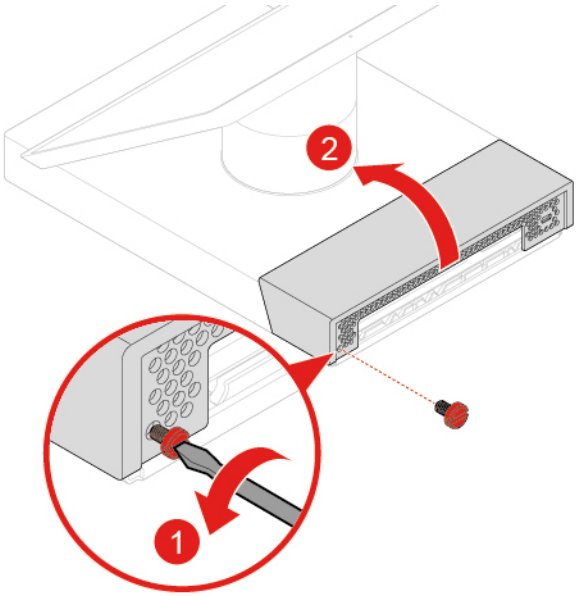

Figure 9. Opening the cable management door

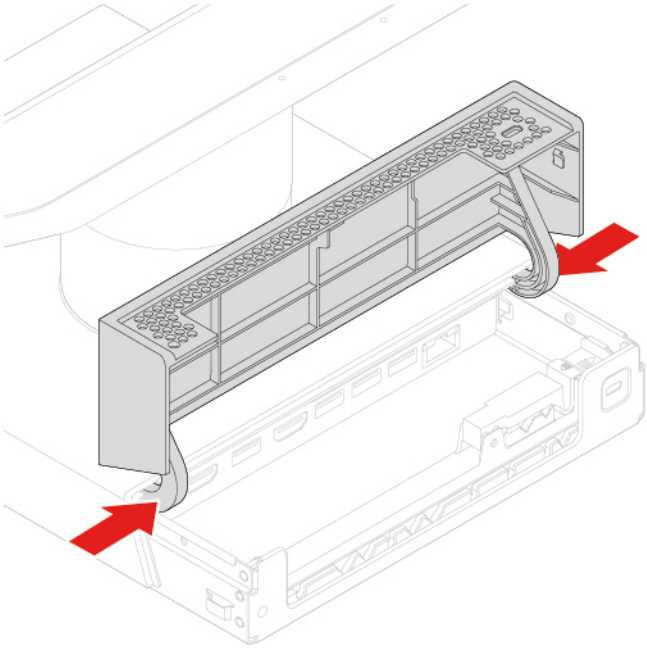

Figure 10. Removing the cable management door

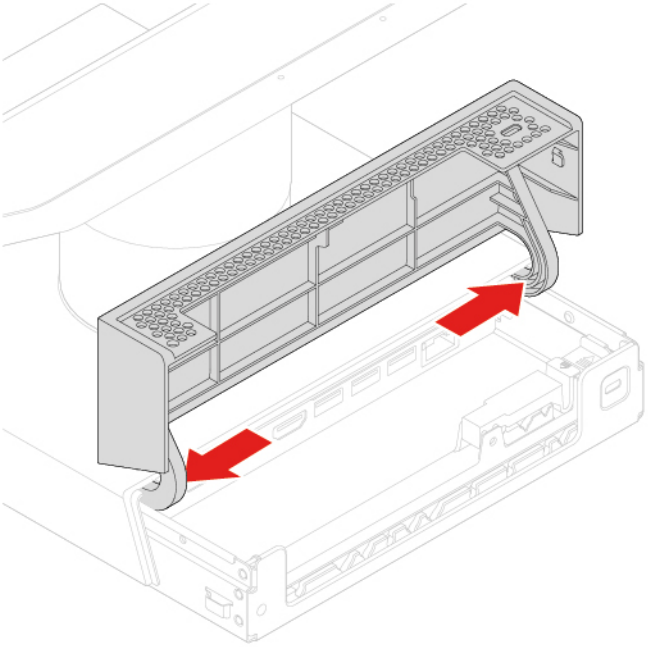

Figure 11. Installing the cable management door

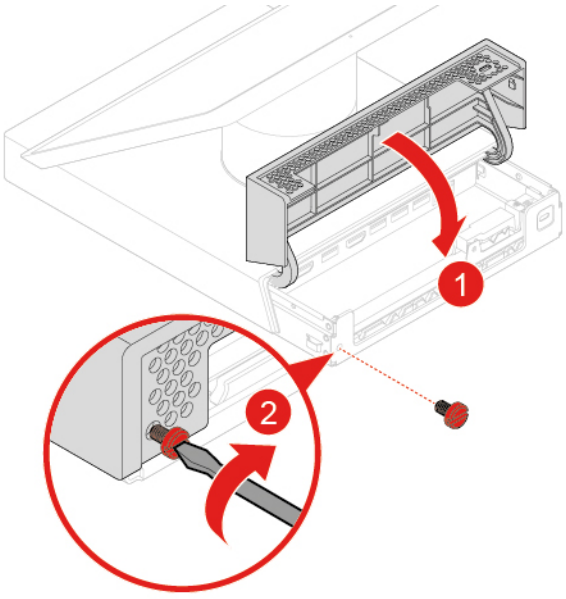

Figure 12. Closing and locking the cable management door

4. Use the Kensington-style cable lock to lock the meeting console.
5. Reconnect all devices to the meeting console and the power cord to the electrical outlet.

Replacing the internal microphones

Attention: Do not open your meeting console or attempt any repairs before reading the *Important Product Information Guide*.

1. Remove all connected devices, turn off the meeting console, and disconnect the power cord from the electrical outlet.
2. Unlock the Kensington-style cable lock.
3. Replace the internal microphones.

CAUTION:

Separate the LCD panel and the back cover without undue force so that the cables connected to the LCD panel will not be broken.

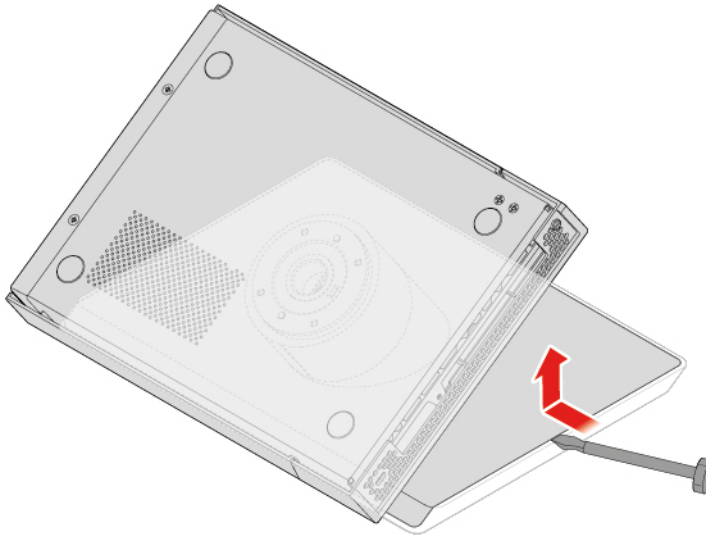

Figure 13. Separating the LCD panel and the back cover

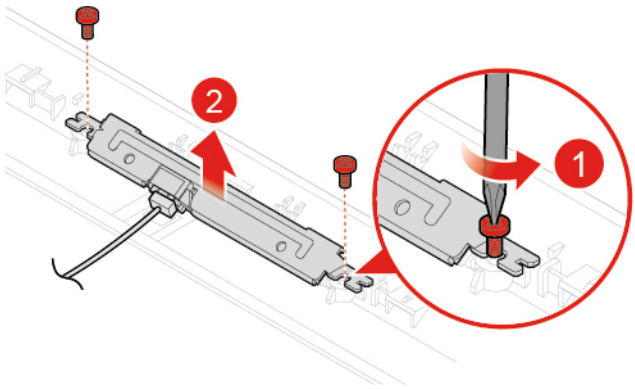

Figure 14. Removing the internal microphones

Note: Before you install the new internal microphones, disconnect the cable from the failing internal microphones to the new one.

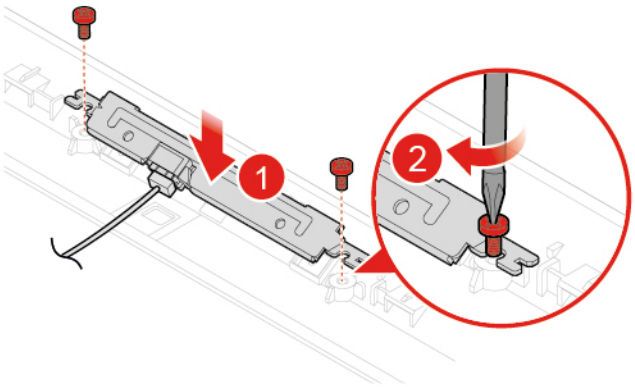

Figure 15. Installing the internal microphones

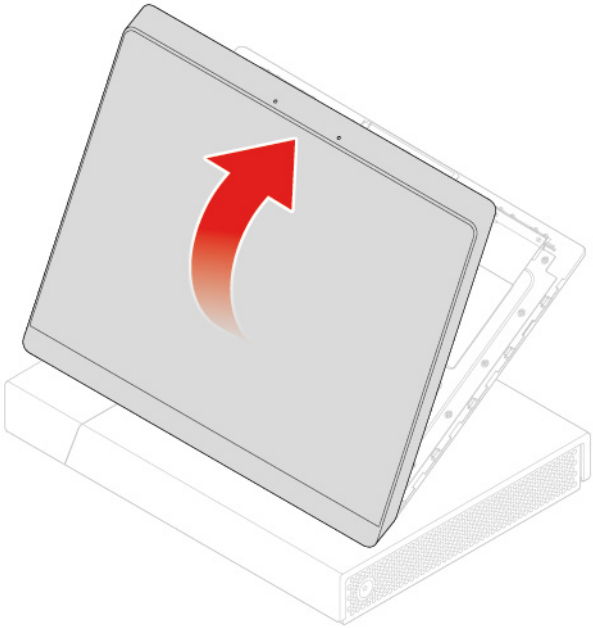

Figure 16. Closing the back cover

4. Use the Kensington-style cable lock to lock the meeting console.
5. Reconnect all devices to the meeting console and the power cord to the electrical outlet.

Removing the system cover

Attention: Do not open your meeting console or attempt any repairs before reading the *Important Product Information Guide*.

CAUTION:



Before you open the system cover, turn off the meeting console and wait several minutes until the meeting console is cool.

1. Remove all connected devices, turn off the meeting console, and disconnect the power cord from the electrical outlet.
2. Unlock the Kensington-style cable lock.
3. Remove the system cover.

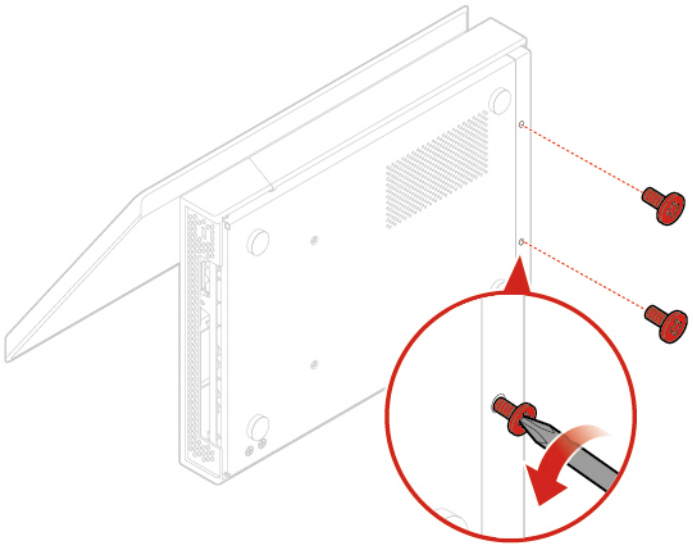

Figure 17. Removing the screws on the bottom

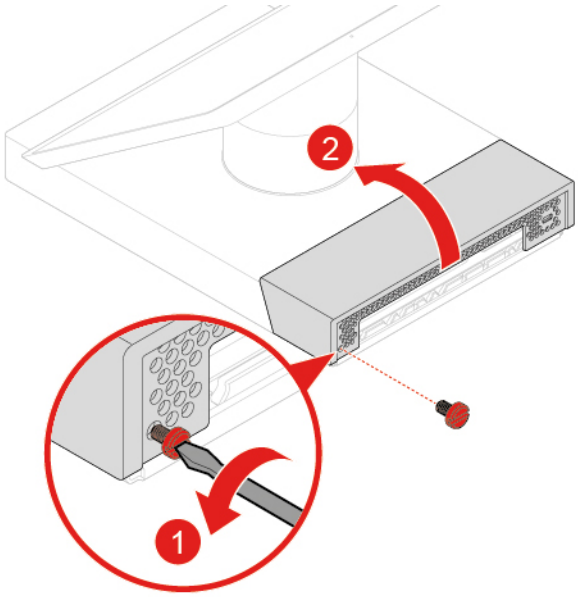

Figure 18. Opening the cable management door

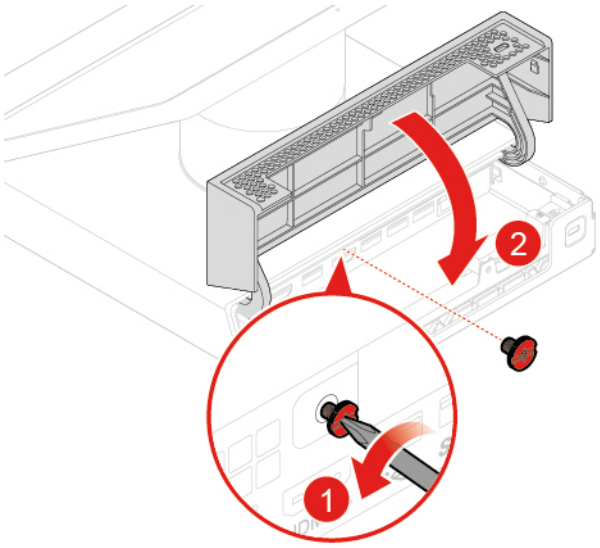

Figure 19. Removing the screw on the side

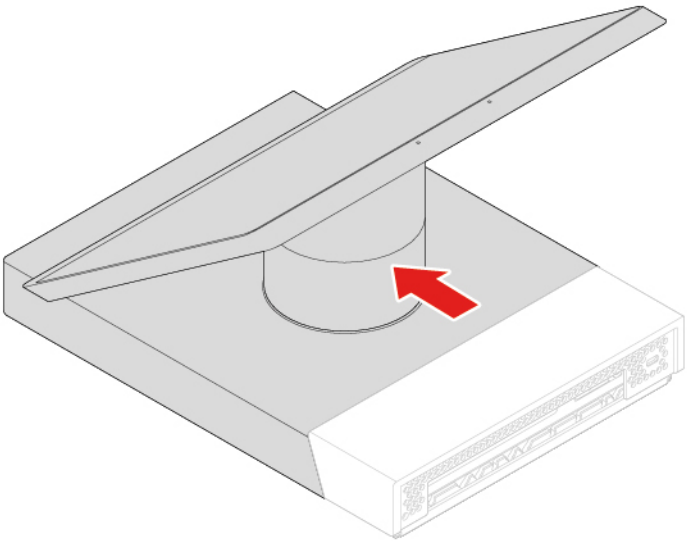

CAUTION:

Slide the system cover without undue force so that the cables connected to the Skype board and the system board will not be broken.

Figure 20. Sliding the system cover out

4. Disconnect all the cables from the Skype board and the system board except the Wi-Fi antenna cables.
5. Remove the video capture card. For details, see “Replacing the video capture card” on page 25.
6. Remove the Skype board. For details, see “Replacing the Skype board” on page 26.
7. Remove the Wi-Fi antenna cables. For details, see “Replacing the Skype board” on page 26.
8. Remove the system cover completely from the chassis.

Replacing the video capture card

Attention: Do not open your meeting console or attempt any repairs before reading the *Important Product Information Guide*.

1. Disconnect the video capture card cable from the video capture card.
2. Replace the video capture card.

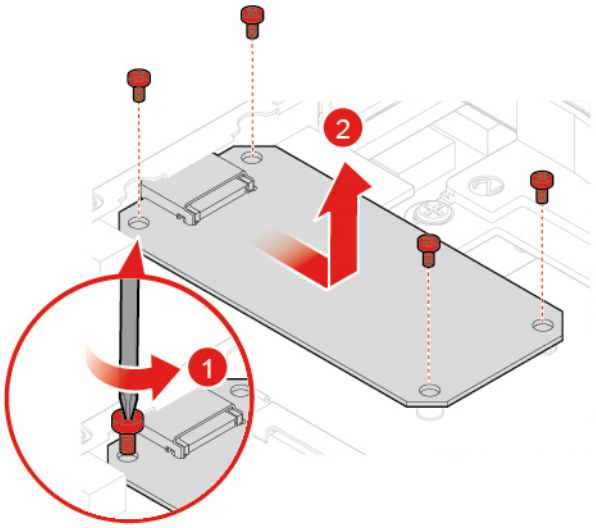

Figure 21. Removing the video capture card

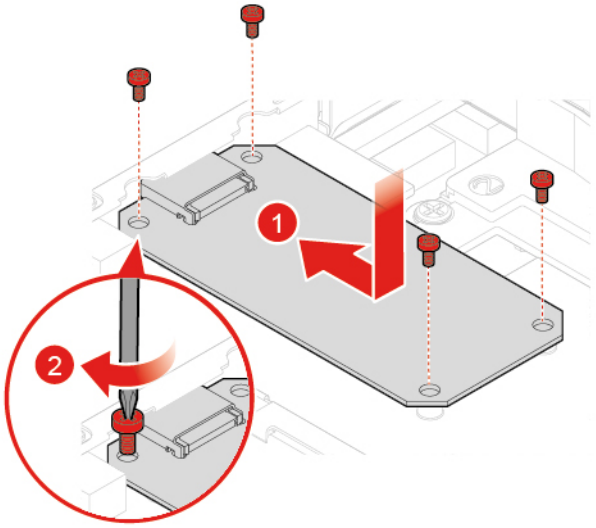

Figure 22. Installing the video capture card

3. Connect the video capture card cable to the new video capture card.
4. Complete the replacement. See “Completing the parts replacement” on page 58.

Replacing the Skype board

Attention: Do not open your meeting console or attempt any repairs before reading the *Important Product Information Guide*.

1. Remove the video capture card. For details, see “Replacing the video capture card” on page 25.
2. Record the cable routing and cable connections, and then disconnect all cables from the Skype board.
3. Replace the Skype board.

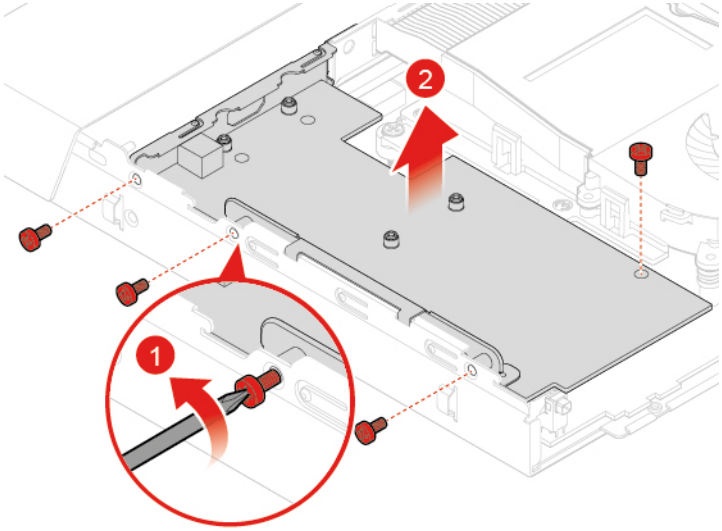

Figure 23. Removing the Skype board with the bracket and holder

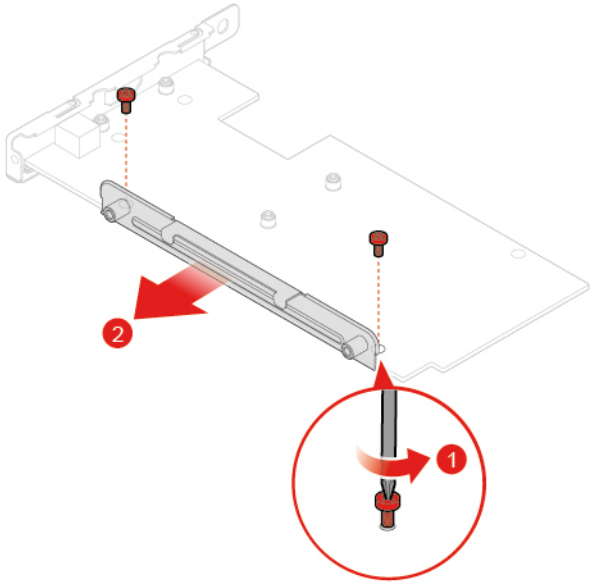

Figure 24. Removing the Skype board bracket

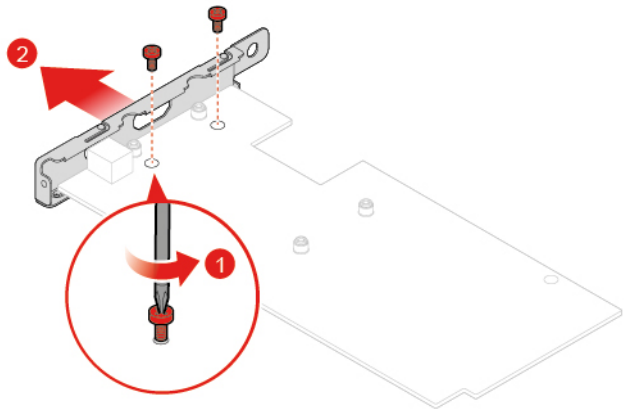

Figure 25. Removing the Skype board holder

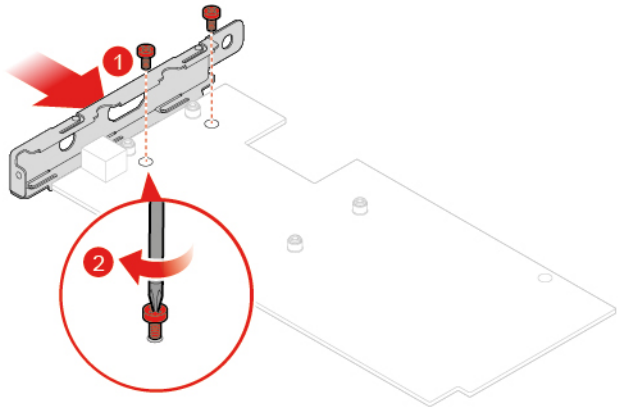

Figure 26. Installing the Skype board holder

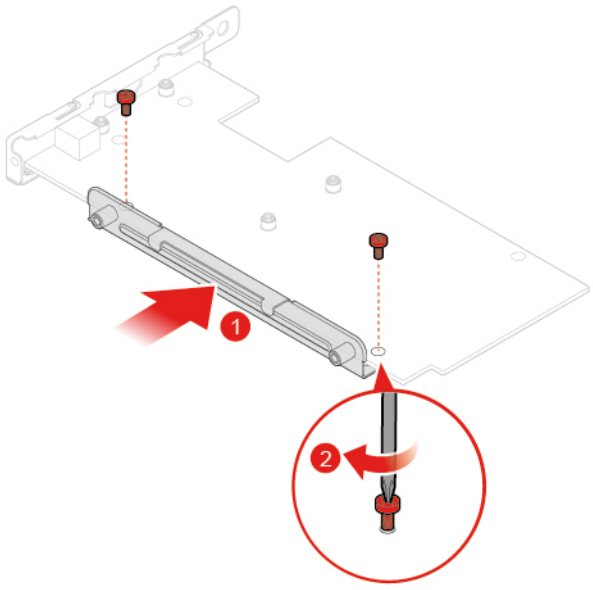

Figure 27. Installing the Skype board bracket

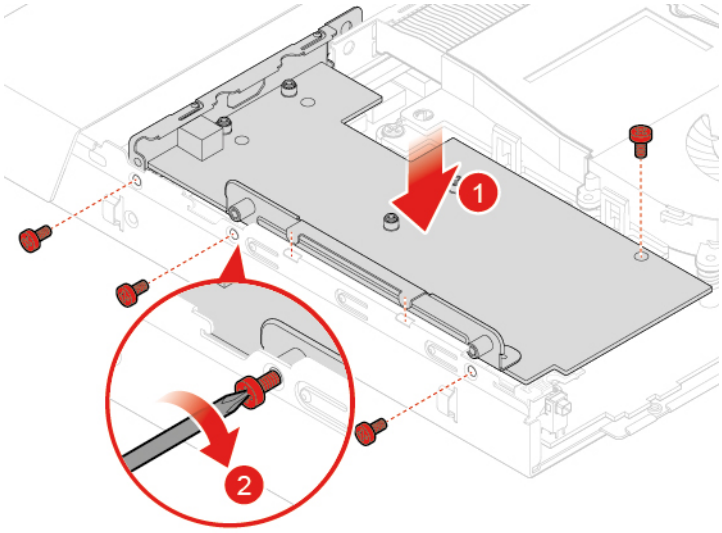

Figure 28. Installing the Skype board with the bracket and holder

4. Route all the cables that you disconnected from the failing Skype board, and then reconnect the cables to the new Skype board.
5. Reinstall the removed parts. To complete the replacement, see “Completing the parts replacement” on page 58.

Replacing the Wi-Fi card

Attention: Do not open your meeting console or attempt any repairs before reading the *Important Product Information Guide*.

1. Remove the system cover. For details, see “Removing the system cover” on page 22.
2. Replace the Wi-Fi card.
   - Type 1

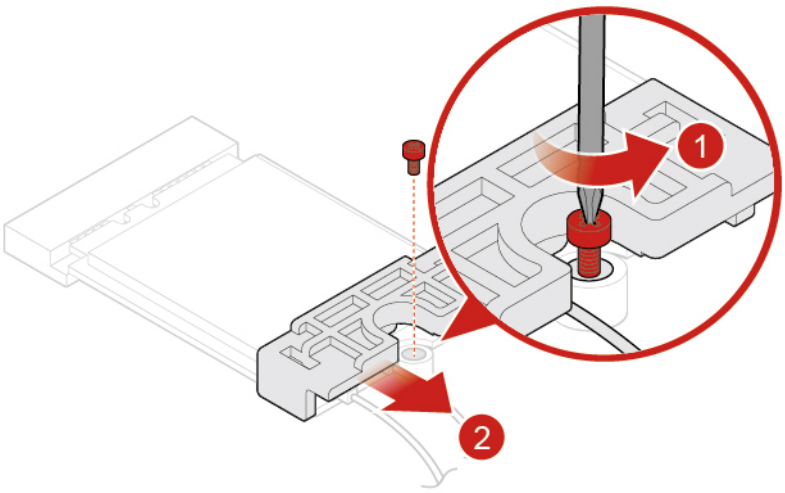

Figure 29. Removing the Wi-Fi card shield

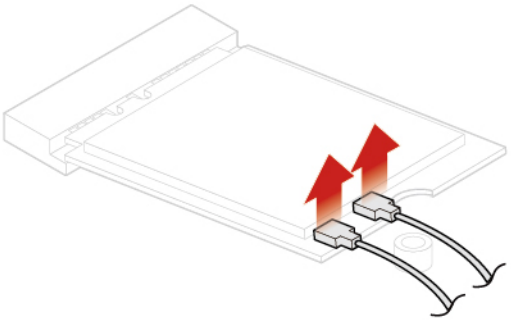

Figure 30. Disconnecting the Wi-Fi antenna cables

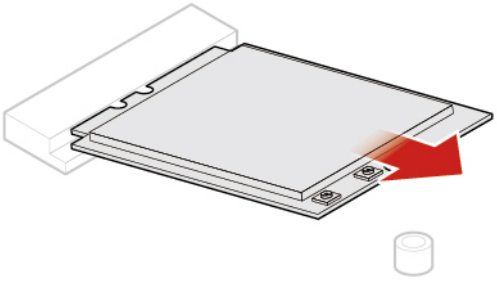

Figure 31. Removing the Wi-Fi card

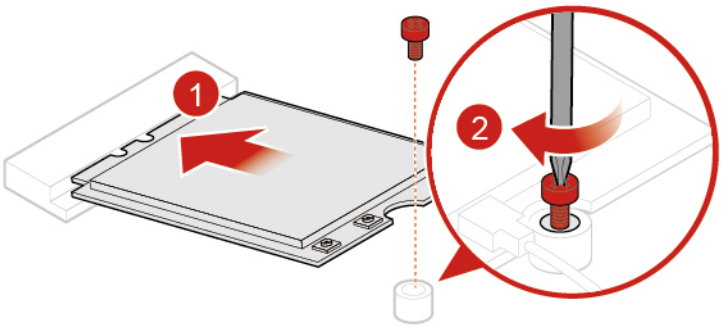

Figure 32. Installing the Wi-Fi card

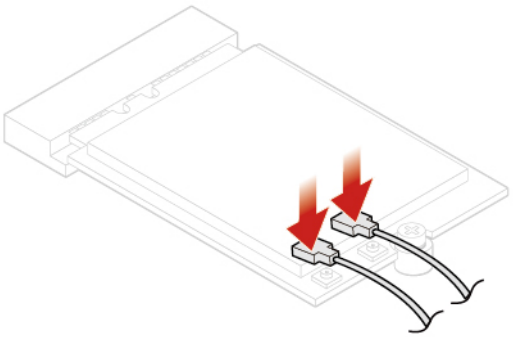

Figure 33. Connecting the Wi-Fi antenna cables

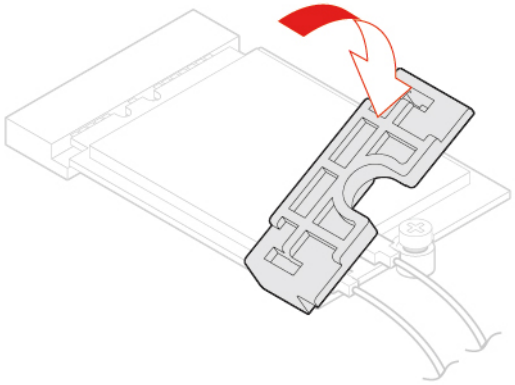

Figure 34. Installing the Wi-Fi card shield

- Type 2

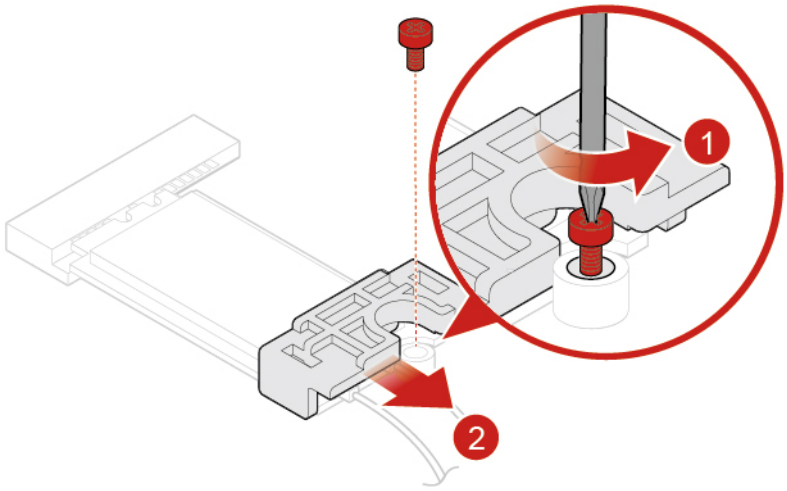

Figure 35. Removing the Wi-Fi card shield

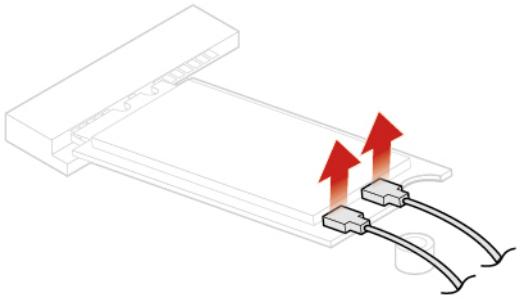

Figure 36. Disconnecting the Wi-Fi antenna cables

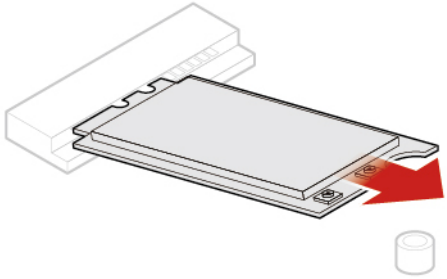

Figure 37. Removing the Wi-Fi card

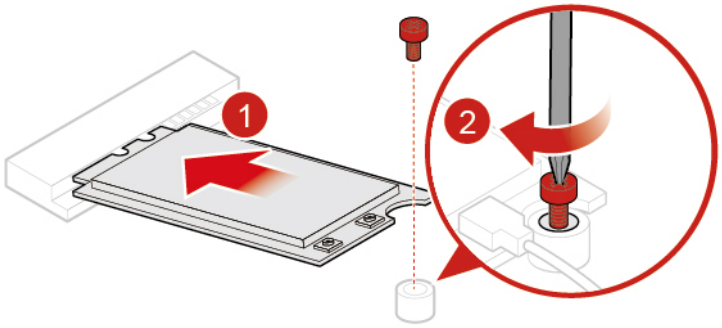

Figure 38. Installing the Wi-Fi card

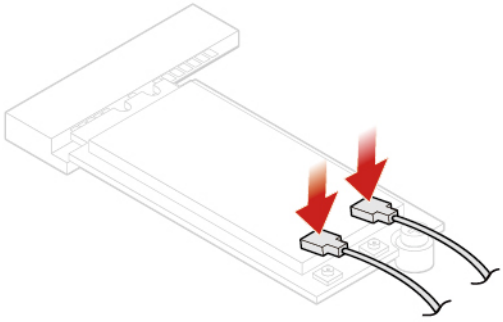

Figure 39. Connecting the Wi-Fi antenna cables

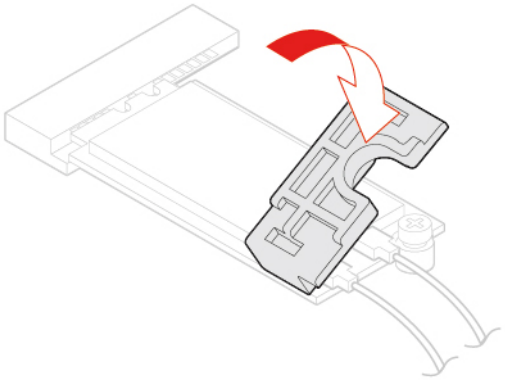

Figure 40. Installing the Wi-Fi card shield

3. Reinstall the removed parts. To complete the replacement, see “Completing the parts replacement” on page 58.

Replacing the system fan

Attention: Do not open your meeting console or attempt any repairs before reading the *Important Product Information Guide*.

1. Remove the system cover. For details, see “Removing the system cover” on page 22.
2. Disconnect the system fan cable from the system board.

3. Replace the system fan.

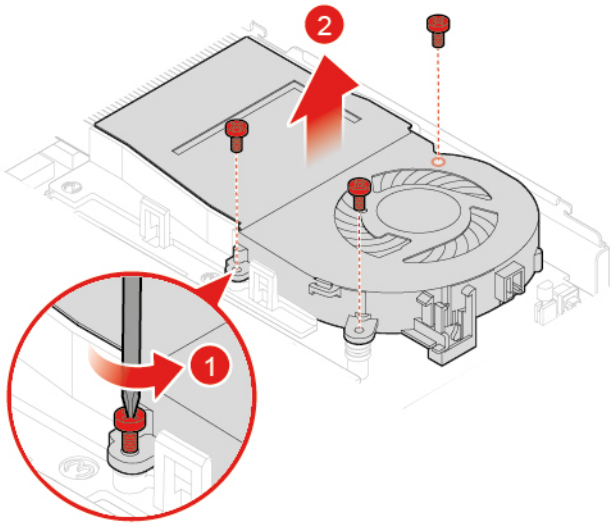

Figure 41. Removing the system fan

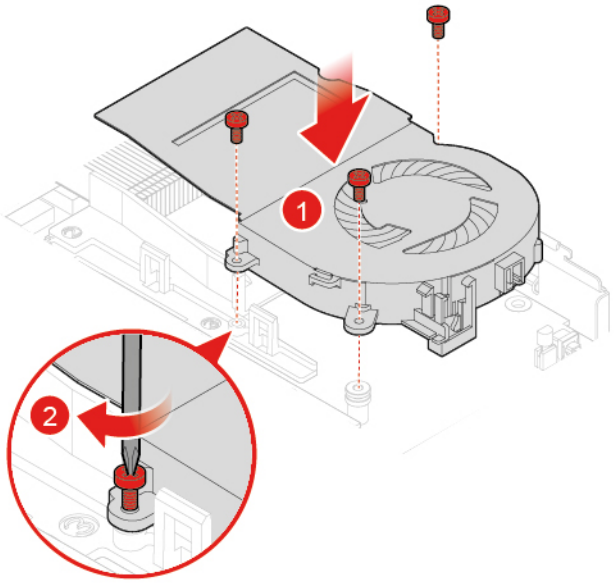

Figure 42. Installing the system fan

4. Connect the new system fan cable to the system board.
5. Complete the replacement. See “Completing the parts replacement” on page 58.

Replacing the heat sink

Attention: Do not open your meeting console or attempt any repairs before reading the *Important Product Information Guide*.

CAUTION:

The heat sink might be very hot. Before you open the system cover, turn off the meeting console and wait several minutes until the meeting console is cool.

1. Remove the system cover. For details, see “Removing the system cover” on page 22.
2. Remove the system fan. For details, see “Replacing the system fan” on page 32.
3. Replace the heat sink.

   Notes:

   - Carefully remove the screws from the system board to avoid any possible damage to the system board. The screws cannot be removed from the heat sink.
   - You might have to gently twist the heat sink to free it from the microprocessor.
   - Do not touch the thermal grease while handling the heat sink.

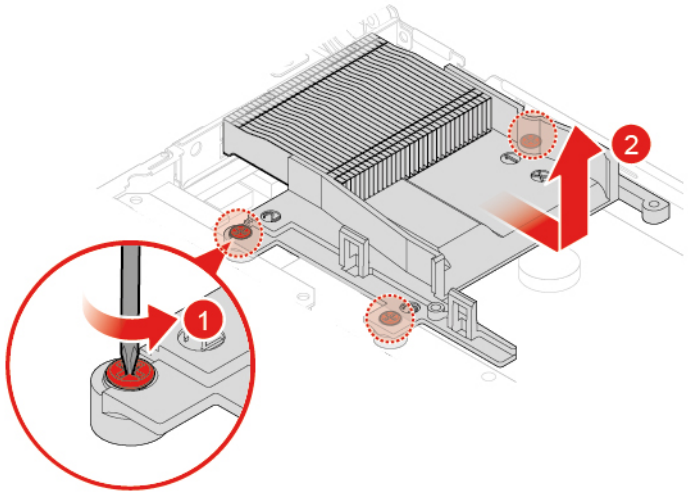

Figure 43. Removing the heat sink

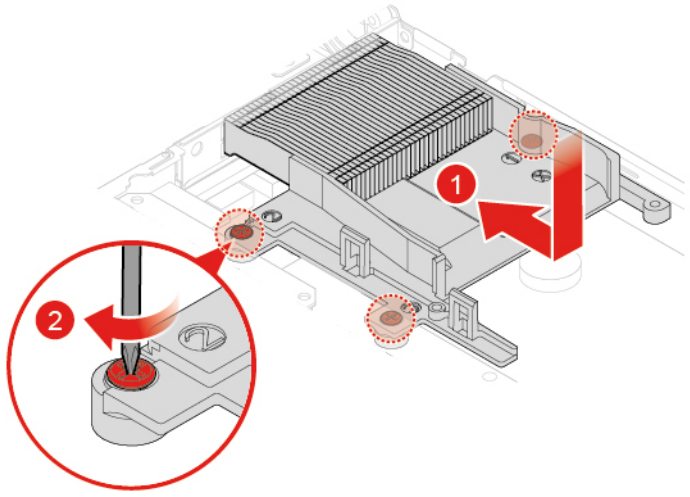

Figure 44. Installing the heat sink

4. Reinstall the removed parts. To complete the replacement, see “Completing the parts replacement” on page 58.

Replacing the coin-cell battery

Attention: Do not open your meeting console or attempt any repairs before reading the *Important Product Information Guide*.

Note: To dispose of the coin-cell battery, refer to “Lithium coin-cell battery notice” in the *Safety, Warranty, and Setup Guide*.

Your meeting console has a special type of memory that maintains the date, time, and settings for built-in features, such as parallel connector assignments (configurations). A coin-cell battery keeps this information active when you turn off the meeting console.

The coin-cell battery normally requires no charging or maintenance throughout its life; however, no coin-cell battery lasts forever. If the coin-cell battery fails, the date, time, and configuration information (including passwords) are lost. An error message is displayed when you turn on the meeting console.

1. Remove the system cover. For details, see “Removing the system cover” on page 22.
2. Remove the system fan. For details, see “Replacing the system fan” on page 32.
3. Remove the heat sink. For details, see “Replacing the heat sink” on page 33.
4. Replace the coin-cell battery.

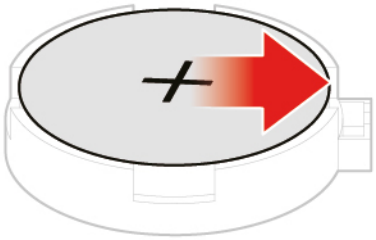

Figure 45. Opening the retainer

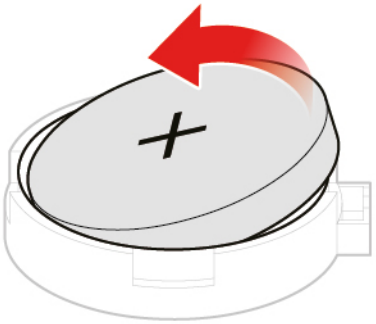

Figure 46. Removing the coin-cell battery

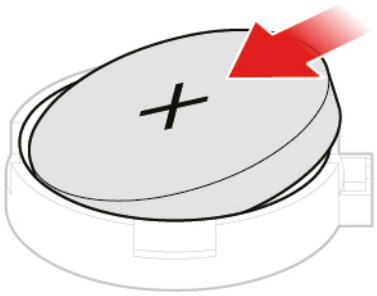

Figure 47. Installing the coin-cell battery

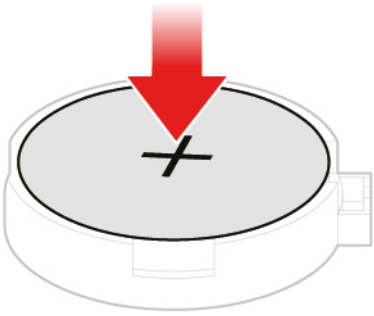

Figure 48. Closing the retainer

5. Reinstall the removed parts. To complete the replacement, see “Completing the parts replacement” on page 58.

Replacing the microprocessor

Attention: Do not open your meeting console or attempt any repairs before reading the *Important Product Information Guide*.

CAUTION:



The heat sink and microprocessor might be very hot. Before you open the system cover, turn off the meeting console and wait several minutes until the meeting console is cool.

1. Remove the system cover. For details, see “Removing the system cover” on page 22.
2. Remove the system fan. For details, see “Replacing the system fan” on page 32.

3. Remove the heat sink. For details, see “Replacing the heat sink” on page 33.
4. Record the cable routing and cable connections, and then disconnect all cables from the system board.
5. Replace the microprocessor.

Notes:

- Your microprocessor and socket might look different from the one illustrated.
- Touch only the edges of the microprocessor. Do not touch the gold contacts on the bottom.
- Do not drop anything onto the microprocessor socket while it is exposed. The socket pins must be kept as clean as possible.

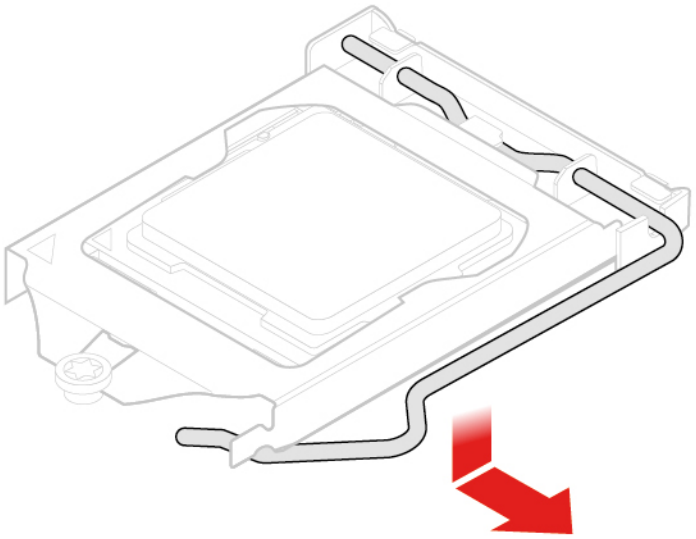

Figure 49. Lifting the handle

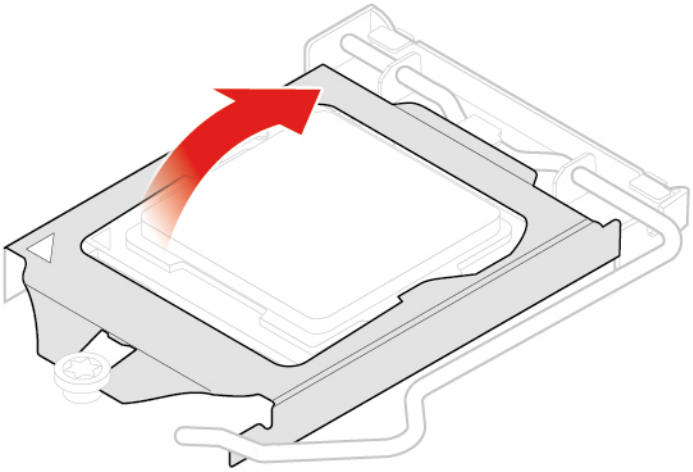

Figure 50. Opening the retainer

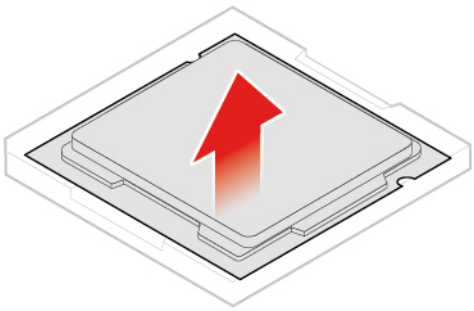

Figure 51. Removing the microprocessor

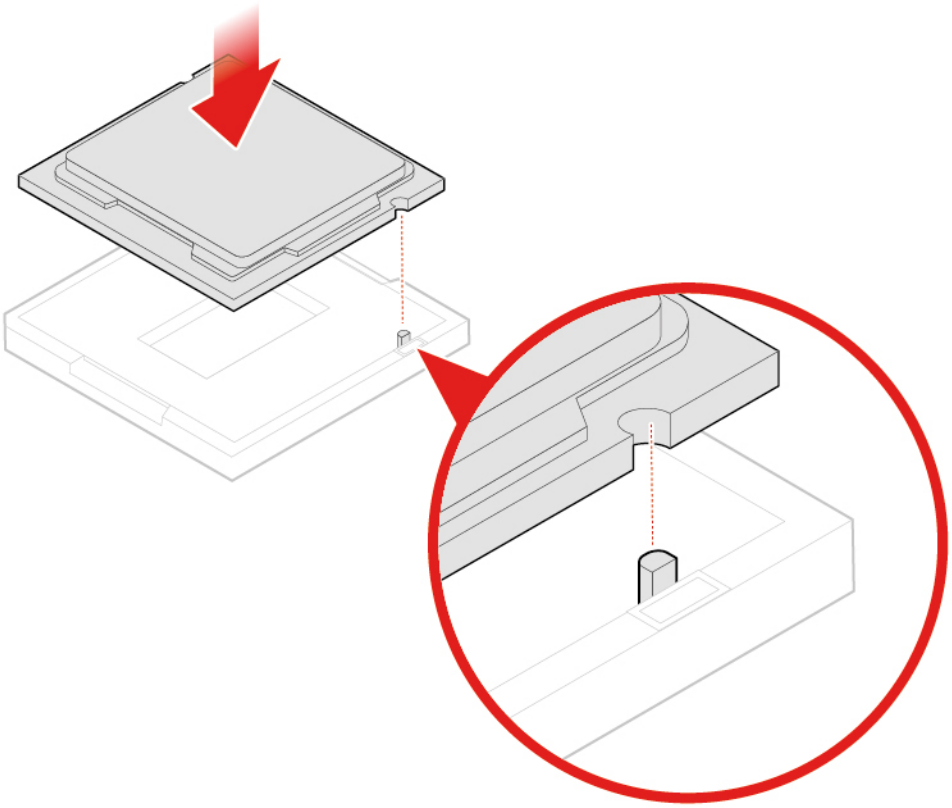

Figure 52. Installing the microprocessor

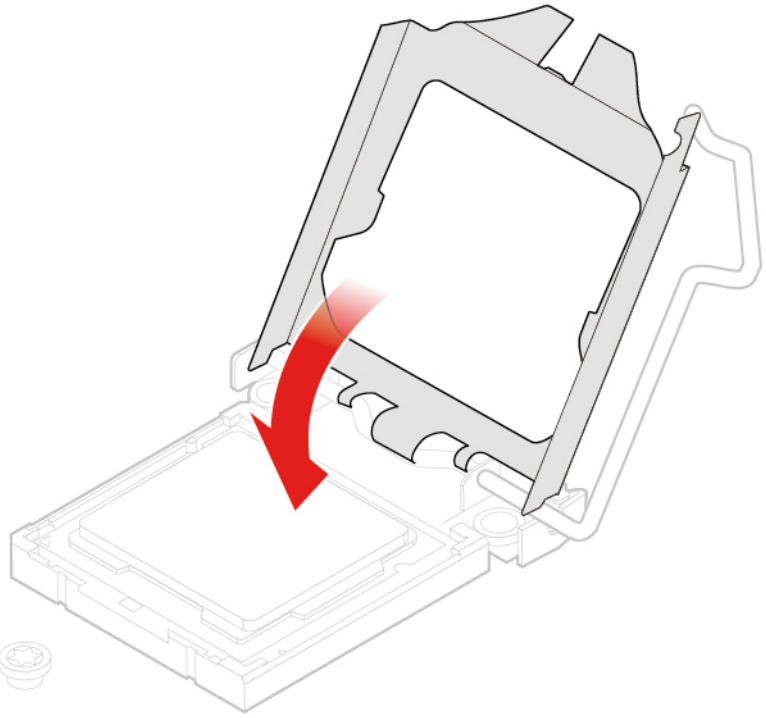

Figure 53. Closing the retainer

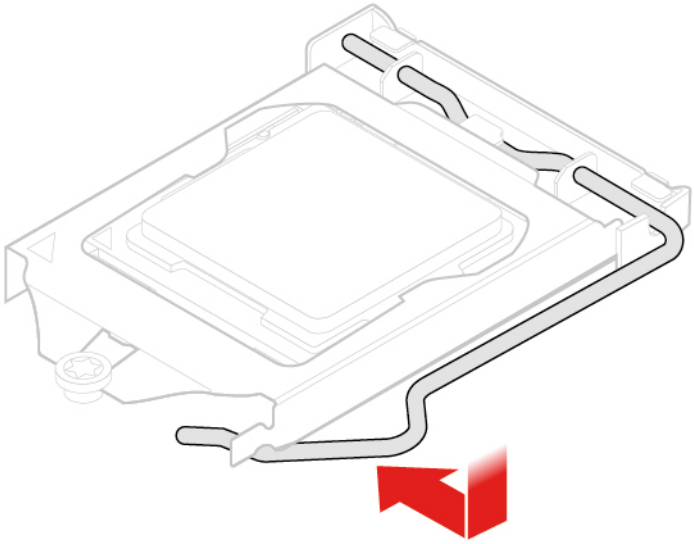

Figure 54. Locking the retainer

6. Route and reconnect all the cables to the system board.
7. Reinstall the removed parts. To complete the replacement, see “Completing the parts replacement” on page 58.

Replacing the system board

Attention: Do not open your meeting console or attempt any repairs before reading the *Important Product Information Guide*.

1. Remove the system cover. For details, see “Removing the system cover” on page 22.
2. Remove the Wi-Fi card. For details, see “Replacing the Wi-Fi card” on page 28.
3. Remove the system fan. For details, see “Replacing the system fan” on page 32.
4. Remove the heat sink. For details, see “Replacing the heat sink” on page 33.
5. Remove the coin-cell battery. For details, see “Replacing the coin-cell battery” on page 35.
6. Remove the microprocessor. For details, see “Replacing the microprocessor” on page 37.
7. Record the cable routing and cable connections, and then disconnect all cables from the system board.
8. Replace the system board.

   Note: Use a six point socket to remove the standoff.

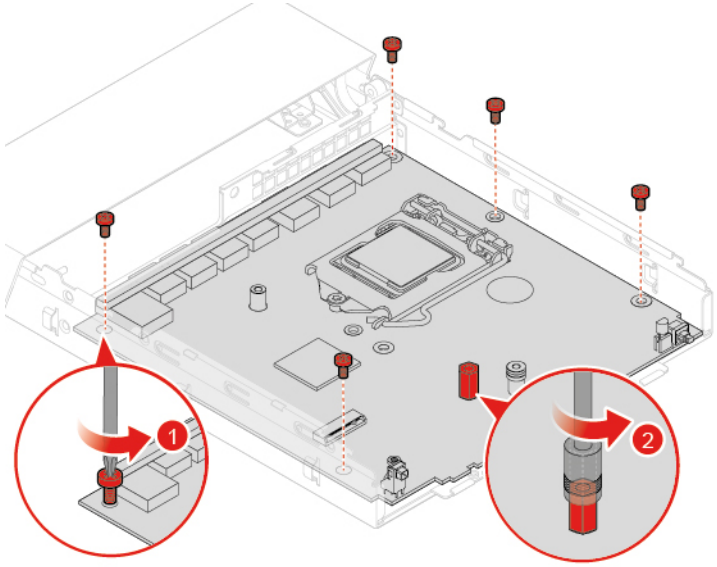

Figure 55. Removing the screws and the standoff

Notes:

- Handle the system board carefully by its edges.
- The failing system board must be returned with a microprocessor socket cover to protect the pins during shipping and handling.

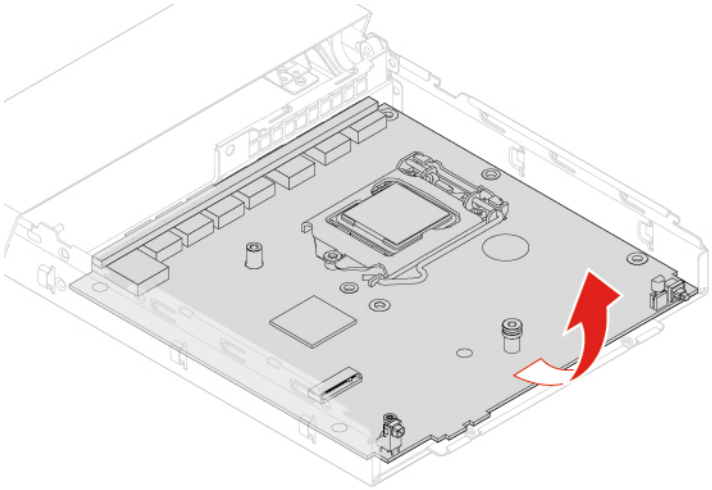

Figure 56. Removing the system board

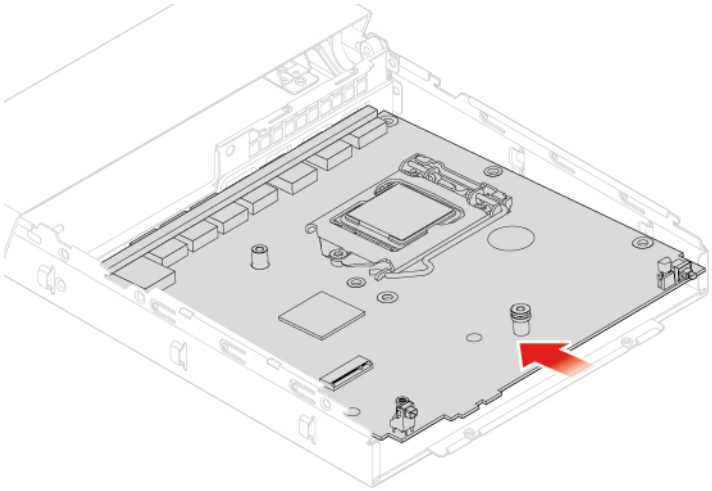

Figure 57. Installing the system board

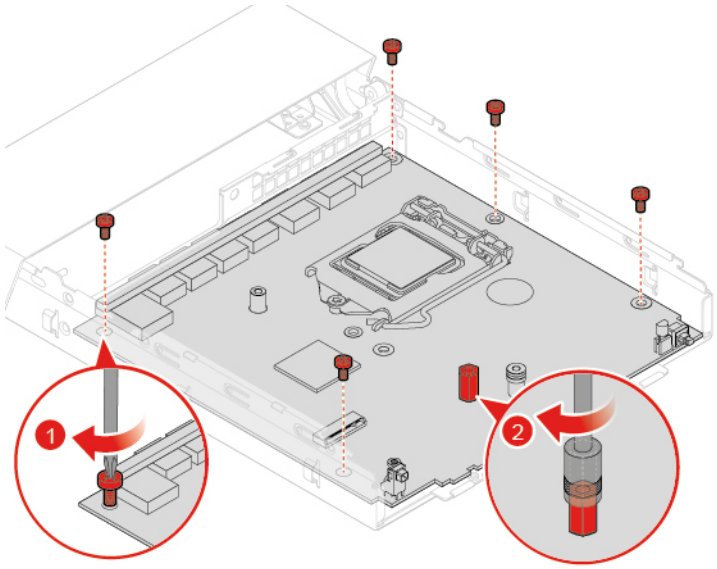

Figure 58. Installing the screws and the standoff

9. Route and connect all the cables to the new system board.
10. Reinstall the removed parts. To complete the replacement, see “Completing the parts replacement” on page 58.

Replacing a memory module

Attention: Do not open your meeting console or attempt any repairs before reading the *Important Product Information Guide*.

1. Remove the system cover. For details, see “Removing the system cover” on page 22.
2. Remove the system fan. For details, see “Replacing the system fan” on page 32.
3. Remove the heat sink. For details, see “Replacing the heat sink” on page 33.
4. Remove the system board. For details, see “Replacing the system board” on page 41.
5. Replace the memory module.

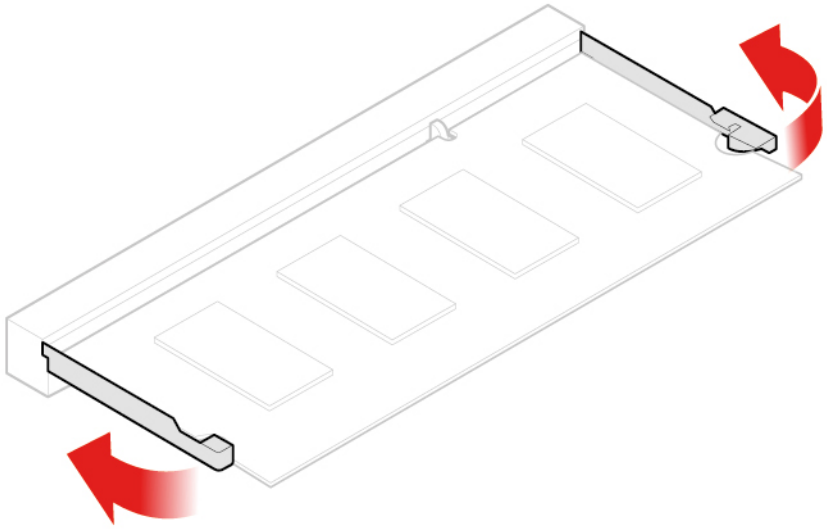

Figure 59. Opening the retainer

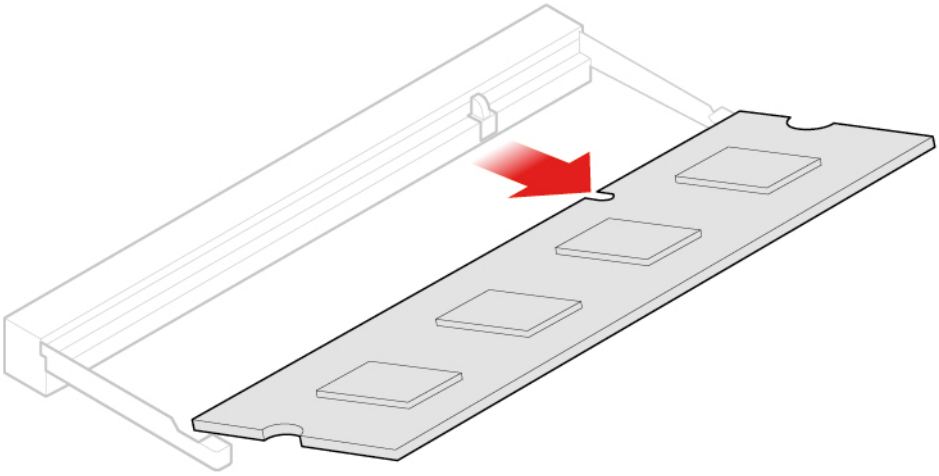

Figure 60. Removing the memory module

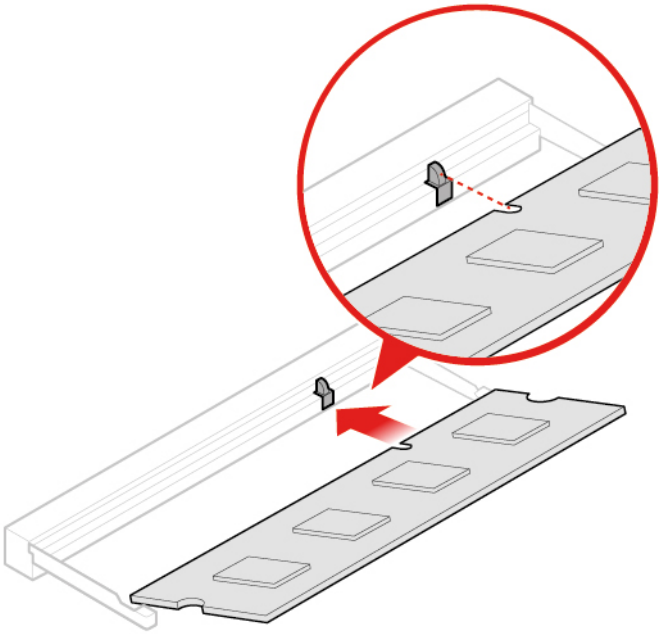

Figure 61. Installing the memory module

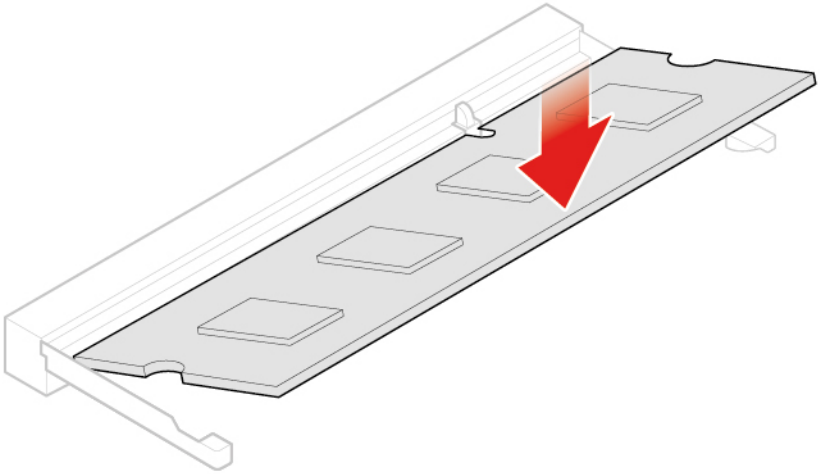

Figure 62. Closing the retainer

6. Reinstall the removed parts. To complete the replacement, see “Completing the parts replacement” on page 58.

Replacing the M.2 solid-state drive

Attention: Do not open your meeting console or attempt any repairs before reading the *Important Product Information Guide*.

1. Remove the system cover. For details, see “Removing the system cover” on page 22.
2. Remove the system fan. For details, see “Replacing the system fan” on page 32.
3. Remove the heat sink. For details, see “Replacing the heat sink” on page 33.
4. Remove the system board. For details, see “Replacing the system board” on page 41.
5. Replace the M.2 solid-state drive.

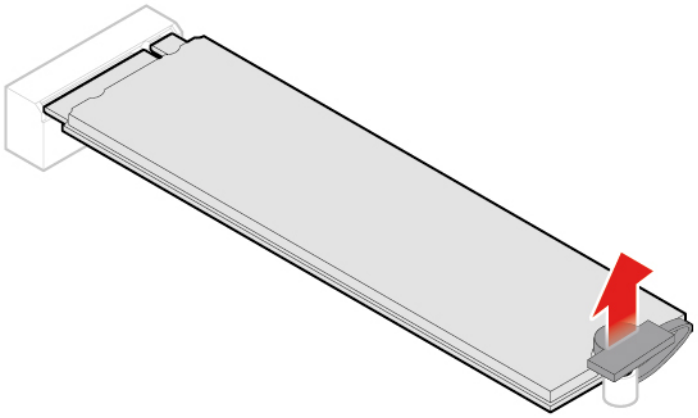

Figure 63. Pulling out the stopper

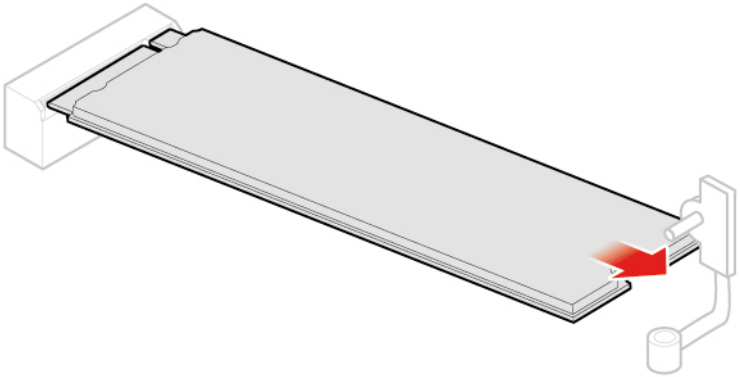

Figure 64. Removing the M.2 solid-state drive

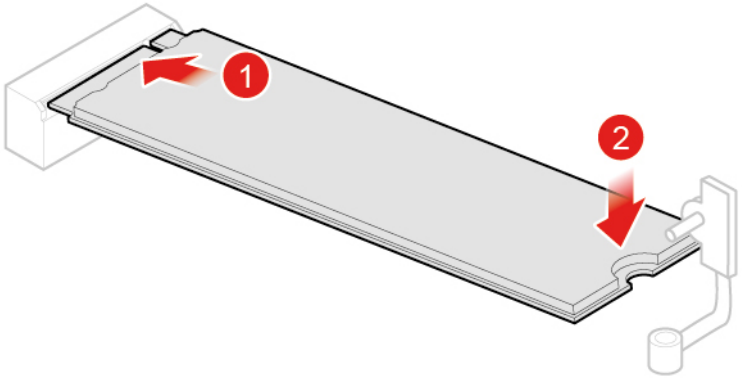

Figure 65. Installing the M.2 solid-state drive

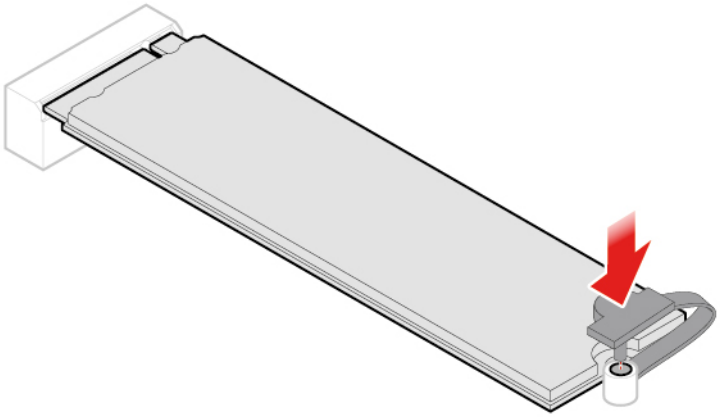

Figure 66. Inserting the stopper

6. Reinstall the removed parts. To complete the replacement, see “Completing the parts replacement” on page 58.

Replacing the LED board

Attention: Do not open your meeting console or attempt any repairs before reading the *Important Product Information Guide*.

1. Remove the system cover. For details, see “Removing the system cover” on page 22.
2. Disconnect the LED board cable from the LED board.
3. Replace the LED board.

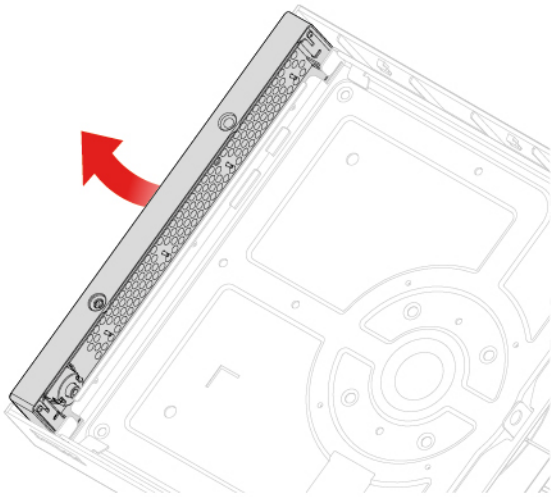

Figure 67. Removing the right cover

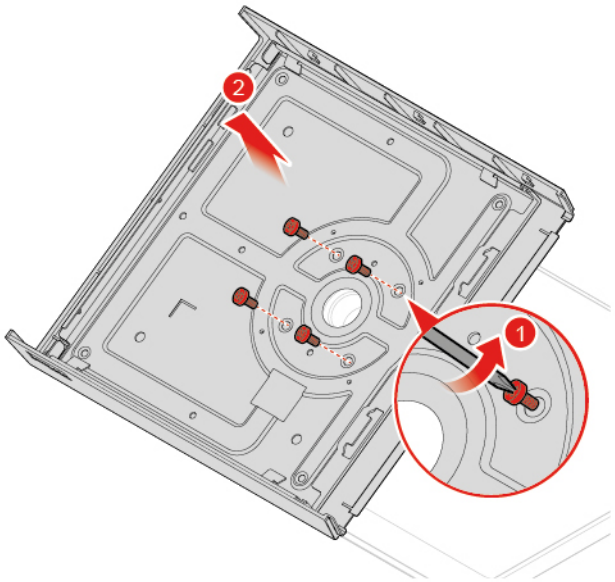

Figure 68. Removing the LED board and the upper cover

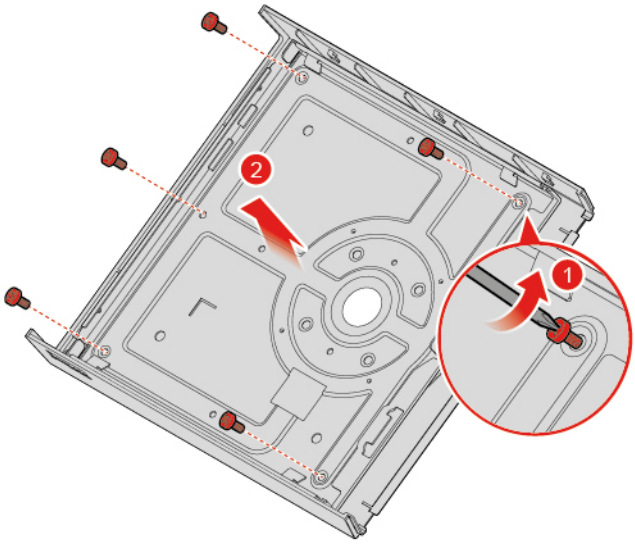

Figure 69. Removing the LED board

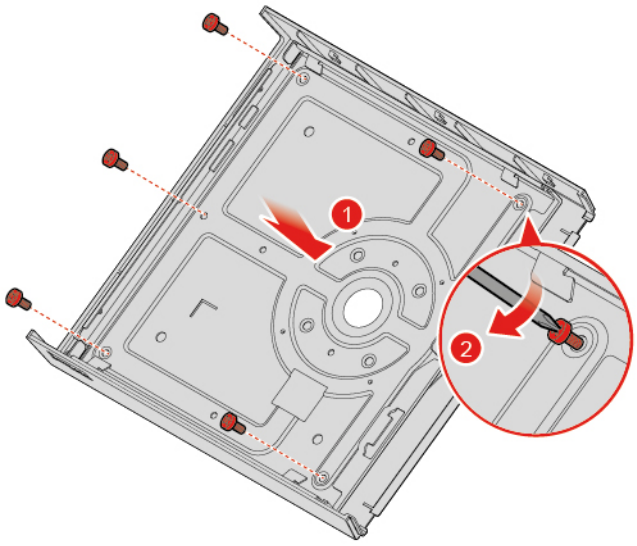

Figure 70. Installing the LED board

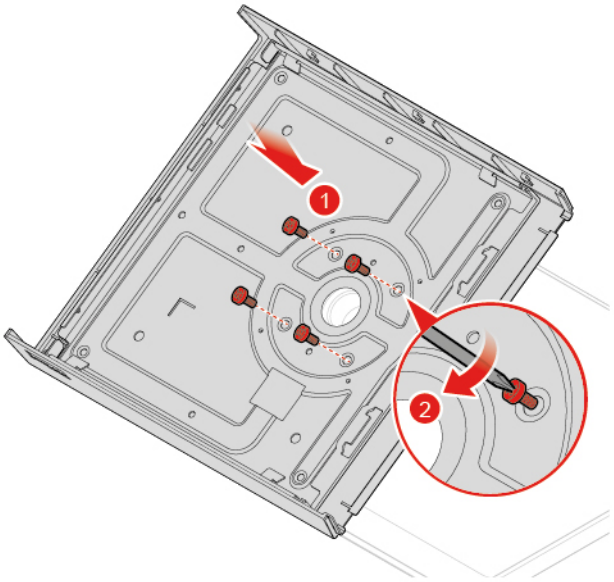

Figure 71. Installing the LED board and the upper cover

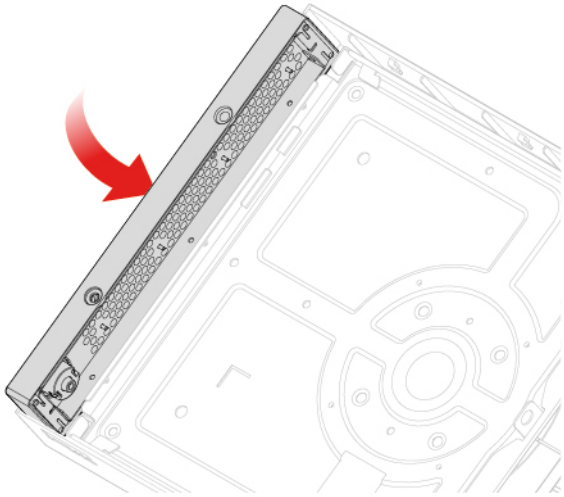

Figure 72. Installing the right cover

4. Connect the LED board cable to the new LED board.
5. Complete the replacement. See “Completing the parts replacement” on page 58.

Replacing the hinge pipe

Attention: Do not open your meeting console or attempt any repairs before reading the *Important Product Information Guide*.

1. Remove the system cover. For details, see “Removing the system cover” on page 22.
2. Replace the hinge pipe.

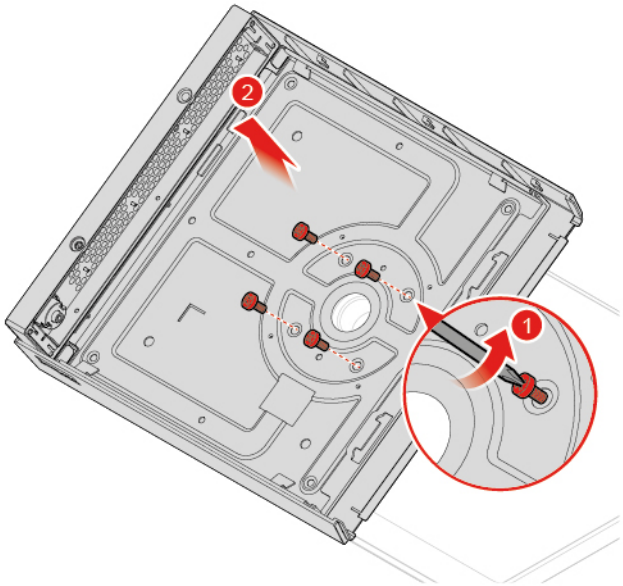

Figure 73. Removing the upper cover and the LED board

CAUTION:

Separate the LCD panel and the back cover without undue force so that the cables connected to the LCD panel will not be broken.

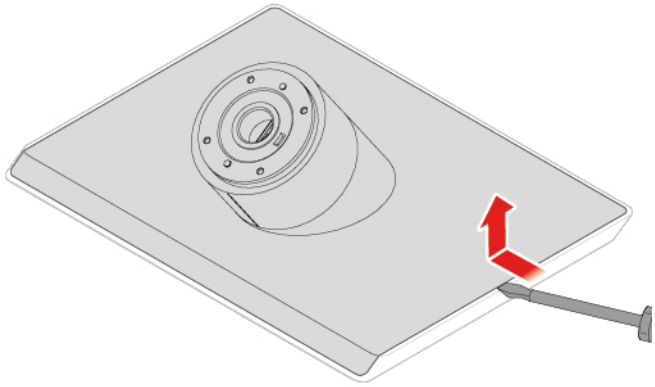

Figure 74. Separating the LCD panel and the back cover

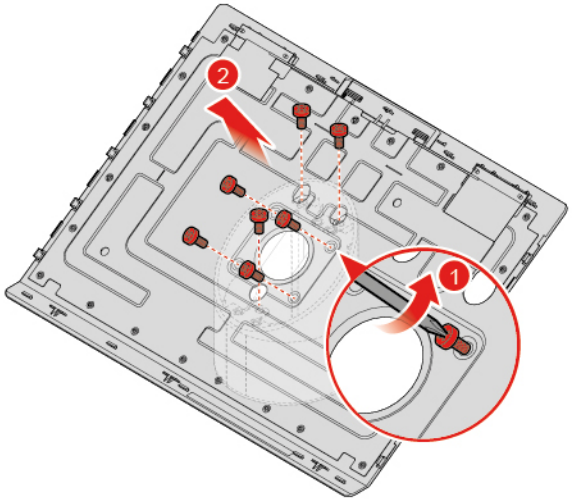

Figure 75. Removing the hinge

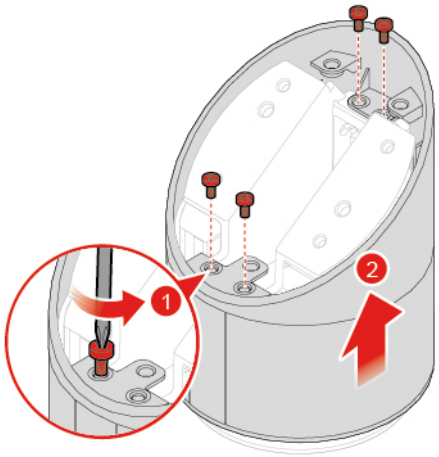

Figure 76. Removing the hinge pipe

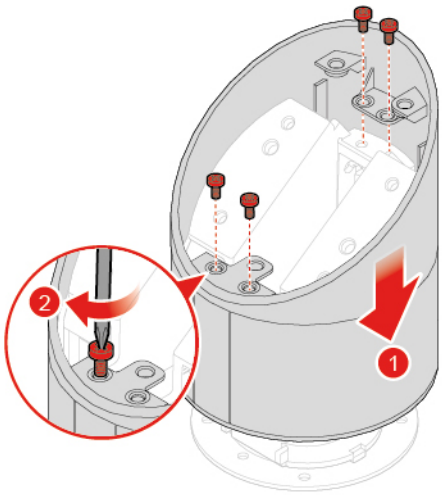

Figure 77. Installing the hinge pipe

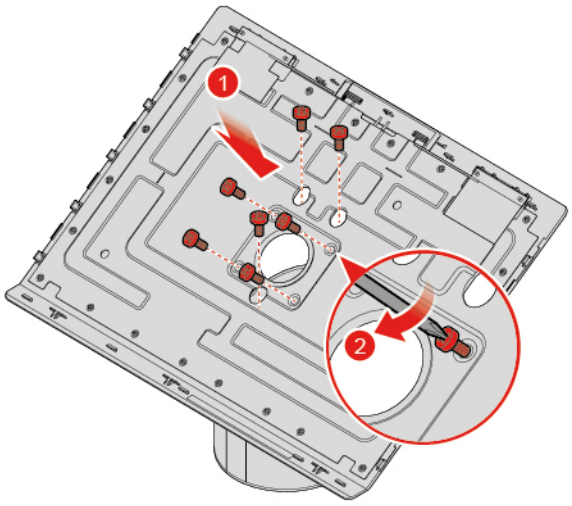

Figure 78. Installing the hinge

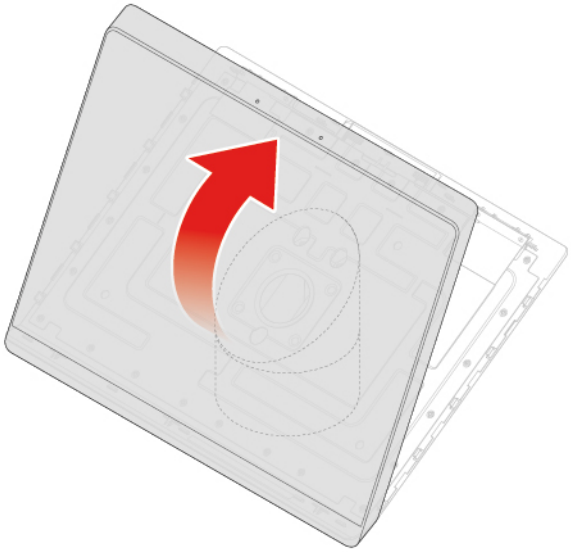

Figure 79. Closing the back cover

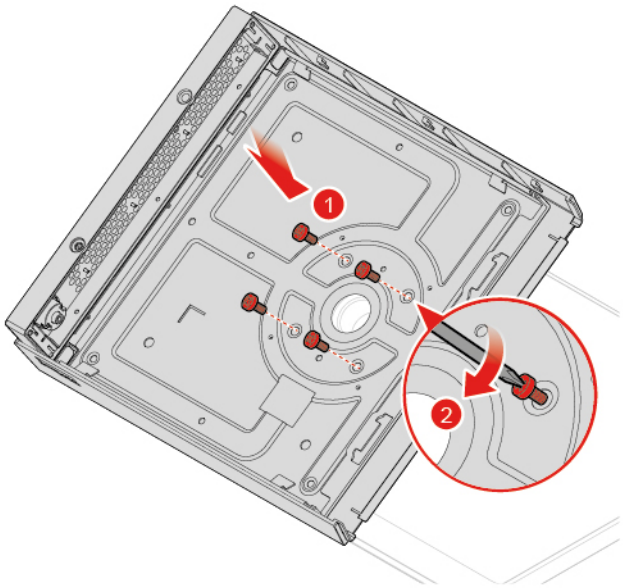

Figure 80. Installing the upper cover and the LED board

3. Reinstall the removed parts. To complete the replacement, see “Completing the parts replacement” on page 58.

Replacing the internal speakers

Attention: Do not open your meeting console or attempt any repairs before reading the *Important Product Information Guide*.

1. Remove the system cover. For details, see “Removing the system cover” on page 22.
2. Remove the hinge pipe. For details, see “Replacing the hinge pipe” on page 50.
3. Record the cable routing and cable connection, and then disconnect the internal speakers cable from the Skype board.
4. Replace the internal speakers.

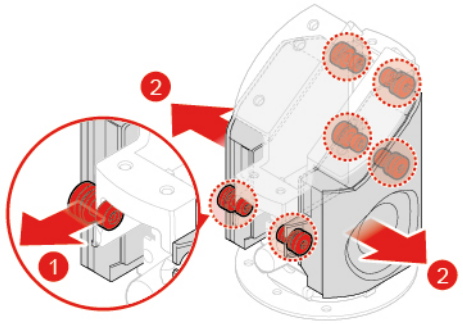

Figure 81. Removing the internal speakers

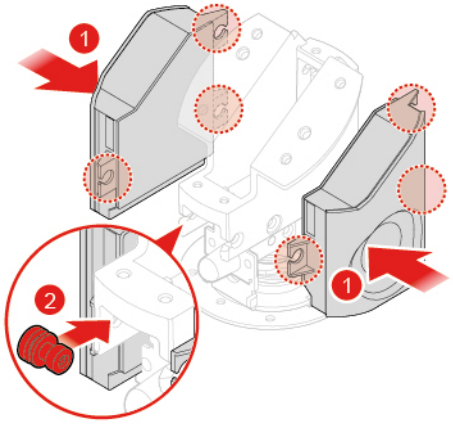

Figure 82. Installing the internal speakers

5. Route the new internal speakers cable, and then connect it to the Skype board.
6. Reinstall the removed parts. To complete the replacement, see “Completing the parts replacement” on page 58.

Replacing the infrared board

Attention: Do not open your meeting console or attempt any repairs before reading the *Important Product Information Guide*.

1. Remove the system cover. For details, see “Removing the system cover” on page 22.
2. Remove the hinge pipe. For details, see “Replacing the hinge pipe” on page 50.
3. Disconnect the infrared board cable from the infrared board.
4. Replace the infrared board.

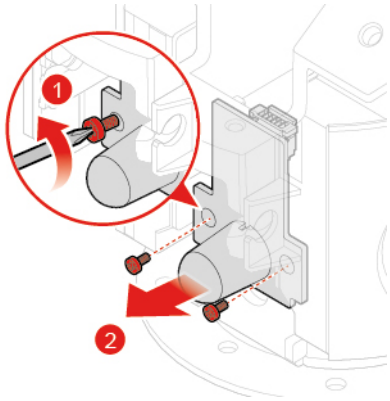

Figure 83. Removing the infrared board

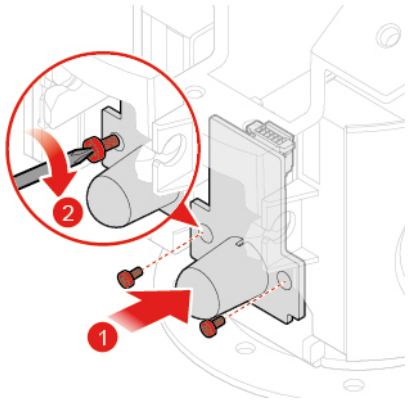

Figure 84. Installing the infrared board

5. Connect the infrared board cable to the new infrared board.
6. Reinstall the removed parts. To complete the replacement, see “Completing the parts replacement” on page 58.

Replacing the Wi-Fi antennas

Attention: Do not open your meeting console or attempt any repairs before reading the *Important Product Information Guide*.

1. Remove the system cover. For details, see “Removing the system cover” on page 22.
2. Replace the Wi-Fi antennas.

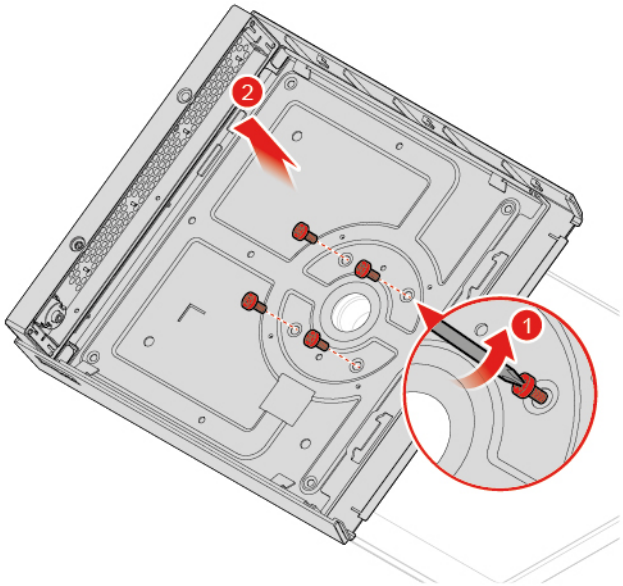

Figure 85. Removing the upper cover and the LED board

CAUTION:

Separate the LCD panel and the back cover without undue force so that the cables connected to the LCD panel will not be broken.

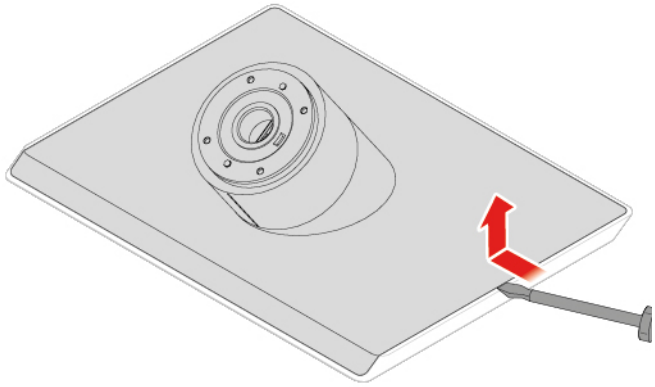

Figure 86. Separating the LCD panel and the back cover

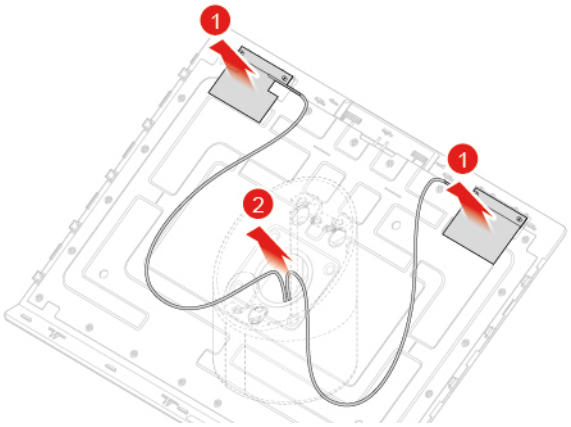

Figure 87. Removing the Wi-Fi antennas

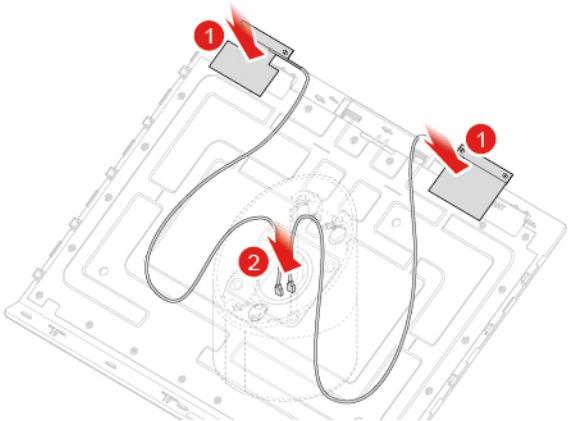

Figure 88. Installing the Wi-Fi antennas

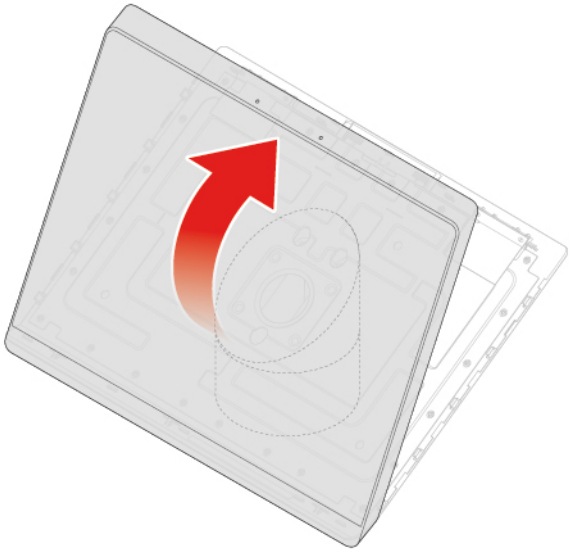

Figure 89. Closing the back cover

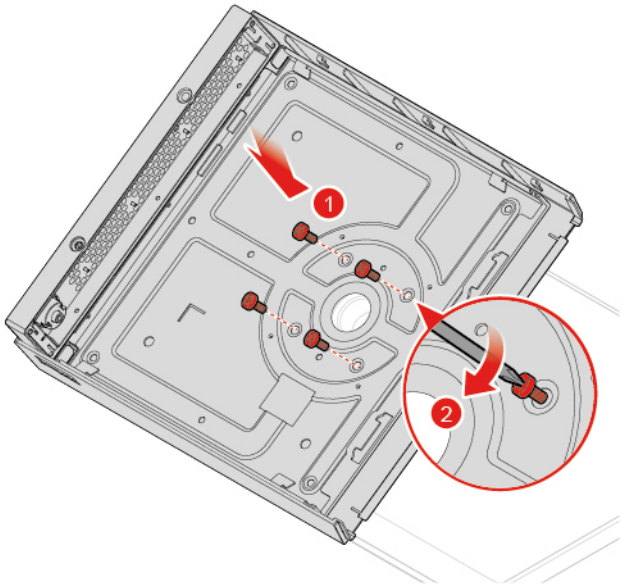

Figure 90. Installing the upper cover and the LED board

3. Reinstall the removed parts. To complete the replacement, see “Completing the parts replacement” on page 58.

Completing the parts replacement

After completing the replacement for all parts, reinstall the system cover and reconnect the cables.

To reinstall the system cover and reconnect the cables to your meeting console, do the following:

1. Ensure that all components have been reassembled correctly and that no tools or loose screws are left inside your meeting console.

2. Ensure that the cables are routed correctly before reinstalling the system cover. Keep cables clear of the hinges and sides of the meeting console chassis to avoid interference when reinstalling the system cover.
3. Reinstall the system cover.

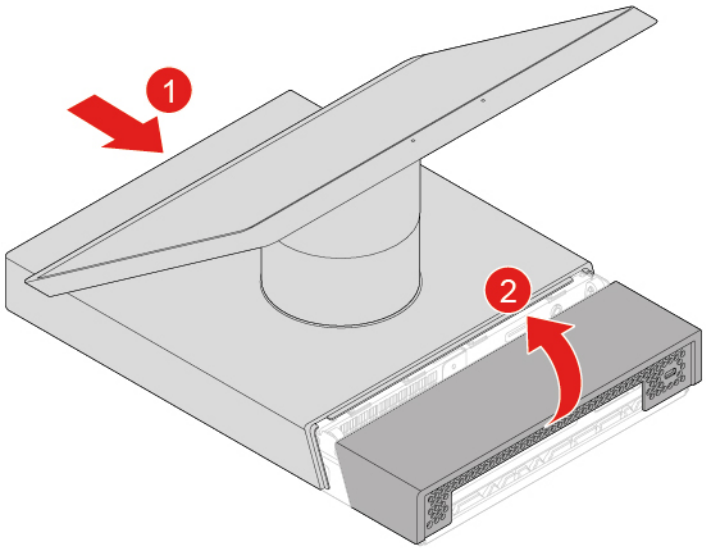

Figure 91. Reinstalling the system cover

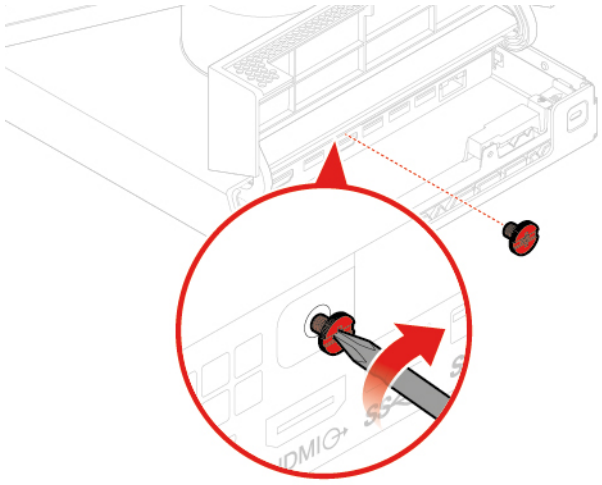

Figure 92. Reinstalling the screw on the side

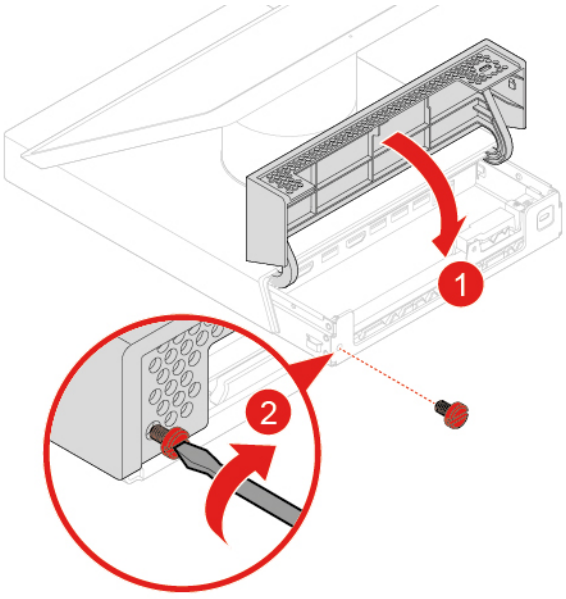

Figure 93. Closing and locking the cable management door

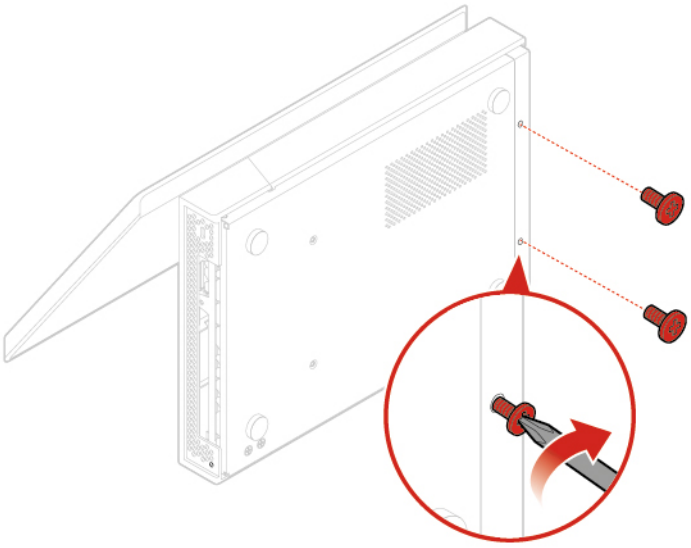

Figure 94. Reinstalling the screws on the bottom

4. Place the meeting console in an upright position.
5. Use the Kensington-style cable lock to lock the meeting console.
6. Reconnect all devices to the meeting console and the power cord to the electrical outlet.

Appendix A. Notices

Lenovo may not offer the products, services, or features discussed in this document in all countries. Consult your local Lenovo representative for information on the products and services currently available in your area. Any reference to a Lenovo product, program, or service is not intended to state or imply that only that Lenovo product, program, or service may be used. Any functionally equivalent product, program, or service that does not infringe any Lenovo intellectual property right may be used instead. However, it is the user's responsibility to evaluate and verify the operation of any other product, program, or service.

Lenovo may have patents or pending patent applications covering subject matter described in this document. The furnishing of this document does not give you any license to these patents. You can send license inquiries, in writing, to:

Lenovo (United States), Inc.
1009 Think Place - Building One
Morrisville, NC 27560
U.S.A.
Attention: Lenovo Director of Licensing

LENOVO PROVIDES THIS PUBLICATION "AS IS" WITHOUT WARRANTY OF ANY KIND, EITHER EXPRESS OR IMPLIED, INCLUDING, BUT NOT LIMITED TO, THE IMPLIED WARRANTIES OF NON-INFRINGEMENT, MERCHANTABILITY OR FITNESS FOR A PARTICULAR PURPOSE. Some jurisdictions do not allow disclaimer of express or implied warranties in certain transactions, therefore, this statement may not apply to you.

This information could include technical inaccuracies or typographical errors. Changes are periodically made to the information herein; these changes will be incorporated in new editions of the publication. Lenovo may make improvements and/or changes in the products and/or the programs described in this publication at any time without notice.

The products described in this document are not intended for use in implantation or other life support applications where malfunction may result in injury or death to persons. The information contained in this document does not affect or change Lenovo product specifications or warranties. Nothing in this document shall operate as an express or implied license or indemnity under the intellectual property rights of Lenovo or third parties. All information contained in this document was obtained in specific environments and is presented as an illustration. The result obtained in other operating environments may vary.

Lenovo may use or distribute any of the information you supply in any way it believes appropriate without incurring any obligation to you.

Any references in this publication to non-Lenovo Web sites are provided for convenience only and do not in any manner serve as an endorsement of those Web sites. The materials at those Web sites are not part of the materials for this Lenovo product, and use of those Web sites is at your own risk.

Any performance data contained herein was determined in a controlled environment. Therefore, the result obtained in other operating environments may vary significantly. Some measurements may have been made on development-level systems and there is no guarantee that these measurements will be the same on generally available systems. Furthermore, some measurements may have been estimated through extrapolation. Actual results may vary. Users of this document should verify the applicable data for their specific environment.

© Copyright Lenovo 2018, 2019

Appendix B. Trademarks

LENOVO and LENOVO logo are trademarks of Lenovo. Mini DisplayPort (mDP) and DisplayPort are trademarks of the Video Electronics Standards Association. The terms HDMI and HDMI High-Definition Multimedia Interface are trademarks or registered trademarks of HDMI Licensing LLC in the United States and other countries. All other trademarks are the property of their respective owners. © 2018 Lenovo.

© Copyright Lenovo 2018, 2019