ThinkPad X12 Detachable Gen 1
Hardware Maintenance Manual



Lenovo

Note: Before using this information and the product it supports, be sure to read the general information under Appendix A “Notices” on page 81.

Second Edition (May 2021)

© Copyright Lenovo 2021.

LIMITED AND RESTRICTED RIGHTS NOTICE: If data or software is delivered pursuant to a General Services Administration “GSA” contract, use, reproduction, or disclosure is subject to restrictions set forth in Contract No. GS-35F-05925.

Contents

About this manual iii

Chapter 1. Safety information 1

General safety 1
Electrical safety 1
Safety inspection guide 2
Handling devices that are sensitive to electrostatic discharge 3
Grounding requirements 4
Safety notices (multilingual translations) 4

Chapter 2. Important service information 21

Strategy for replacing FRUs 21
Strategy for replacing an M.2 solid-state drive 21
Important notice for replacing a system board 22
How to use error message 22
Strategy for replacing FRUs for CTO, special-bid, and standard models. 22
Product definition 22
FRU identification 23

Chapter 3. General checkout 25

What to do first 25
Checkout guide 26
Diagnosing problems 26
Quick test programs 27
UEFI diagnostic program 27
Bootable diagnostic programs 27
Power system checkout 28
Checking the ac power adapter 29
Checking the battery and operational charging 29

Chapter 4. Related service information 31

Reset or restore Windows 31
Passwords. 31
Power-on password 31
Hard disk password 31
Supervisor password 32
System management password. 32
How to remove the power-on password and system management password 32
How to remove the hard disk password. . . . 33
Power management 34
Sleep mode 34
Hibernation mode 34
Symptom-to-FRU index 34
Numeric error codes 35
Error messages 37
Beep symptoms 37
No-beep symptoms 39
LCD-related symptoms 39
Intermittent problems 40
Undetermined problems 40

Chapter 5. Special keys 41

Chapter 6. Locations 43

Locating computer controls, connectors, and indicators 43
Locating FRUs and CRUs 44
Major FRUs 46
Miscellaneous parts and other FRUs 48
Connector and cable guide 48
Looking up FRU information 49

Chapter 7. FRU replacement notices 51

Service tool kit 51
Screw notices 51
Retaining serial numbers 52
Restoring the serial number of the system unit 52
Retaining the UUID. 53
Reading or writing the ECA information 54

Chapter 8. Removing or replacing a FRU. 55

General guidelines. 55
Before servicing the computer 56
Removing external devices 56
Disabling the built-in battery 56
Removing the nano-SIM card and the nano-SIM-card tray (for selected models) 56
Removing a major FRU 57
1010 LCD module 57
1020 Built-in battery 59
1030 Kickstand and hinges 61
1040 LCD cable 62
1050 Pogo pin cable 62
1060 Volume board and cable 63
1070 Hook holder for bezel 64
1080 Security-lock bracket 65

© Copyright Lenovo 2021

1090 USB-C board bracket 65
1100 USB-C board and cable 66
1110 Thermal fan assembly 67
1120 P-sensor cable 68
1130 M.2 solid-state drive 68
1140 Speakers 69
1150 Wireless-WAN card (for selected models) 69
1160 Power board and cable 70
1170 I/O bracket. 71
1180 NFC module, NFC module cable, and NFC antenna (for selected models) 71
1190 Webcam privacy shutter 72
1200 Front camera module 73
1210 Rear camera 73
1220 Microphone assembly 74
1230 Front camera bracket 74
1240 System board 75
1250 Wireless-LAN antenna assembly 76
1260 Wireless-WAN antenna assembly (for selected models) 78

Appendix A. Notices 81

About this manual

This manual contains service and reference information for ThinkPad X12 Detachable Gen 1, machine types (MT): 20UW and 20UV.

Use this manual along with the advanced diagnostic tests to troubleshoot problems.

Important:

- This manual is intended only for trained service technicians who are familiar with ThinkPad products. Use this manual along with the advanced diagnostic tests to troubleshoot problems effectively.
- Depending on the model, some hardware configuration and software programs might not be available on the computer. Some statements in this manual might not be applicable to the computer.
- Before servicing a ThinkPad product, be sure to read all the information under Chapter 1 “Safety information” on page 1 and Chapter 2 “Important service information” on page 21.

© Copyright Lenovo 2021

Chapter 1. Safety information

This chapter presents following safety information that you must be familiar with before you service a ThinkPad notebook computer.

- “General safety” on page 1
- “Electrical safety” on page 1
- “Safety inspection guide” on page 2
- “Handling devices that are sensitive to electrostatic discharge” on page 3
- “Grounding requirements” on page 4
- “Safety notices (multilingual translations)” on page 4

General safety

Follow these rules to ensure general safety:

- Observe good housekeeping in the area of the machines during and after maintenance.
- When lifting any heavy object:
  1. Make sure that you can stand safely without slipping.
  2. Distribute the weight of the object equally between your feet.
  3. Use a slow lifting force. Never move suddenly or twist when you attempt to lift.
  4. Lift by standing or by pushing up with your leg muscles; this action removes the strain from the muscles in your back. *Do not attempt to lift any object that weighs more than 16 kg (35 lb) or that you think is too heavy for you.*
- Do not perform any action that causes hazards to the customer, or that makes the equipment unsafe.
- Before you start the machine, make sure that other service technicians and the customer's personnel are not in a hazardous position.
- Place removed covers and other parts in a safe place, away from all personnel, while you are servicing the machine.
- Keep your toolcase away from walk areas so that other people will not trip over it.
- Do not wear loose clothing that can be trapped in the moving parts of a machine. Make sure that your sleeves are fastened or rolled up above your elbows. If your hair is long, fasten it.
- Insert the ends of your necktie or scarf inside clothing or fasten it with a nonconductive clip, about 8 centimeters (3 inches) from the end.
- Do not wear jewelry, chains, metal-frame eyeglasses, or metal fasteners for your clothing.

  Attention: Metal objects are good electrical conductors.
- Wear safety glasses when you are hammering, drilling, soldering, cutting wire, attaching springs, using solvents, or working in any other conditions that might be hazardous to your eyes.
- After service, reinstall all safety shields, guards, labels, and ground wires. Replace any safety device that is worn or defective.
- Reinstall all covers correctly before returning the machine to the customer.
- Fan louvers on the machine help to prevent overheating of internal components. Do not obstruct fan louvers or cover them with labels or stickers.

Electrical safety

Observe the following rules when working on electrical equipment.

Important: Use only approved tools and test equipment. Some hand tools have handles covered with a soft material that does not insulate you when working with live electrical currents.Many customers have, near their equipment, rubber floor mats that contain small conductive fibers to decrease electrostatic discharges. Do not use this type of mat to protect yourself from electrical shock.

© Copyright Lenovo 2021

- Find the room emergency power-off (EPO) switch, disconnecting switch, or electrical outlet. If an electrical accident occurs, you can then operate the switch or unplug the power cord quickly.
- Do not work alone under hazardous conditions or near equipment that has hazardous voltages.
- Disconnect all power before:
  - Performing a mechanical inspection
  - Working near power supplies
  - Removing or installing main units
- Before you start to work on the machine, unplug the power cord. If you cannot unplug it, ask the customer to power-off the wall box that supplies power to the machine, and to lock the wall box in the off position.
- If you have to work on a machine that has *exposed* electrical circuits, observe the following precautions:
  - Ensure that another person, familiar with the power-off controls, is near you.

    Attention: Another person must be there to switch off the power, if necessary.
  - Use only one hand when working with powered-on electrical equipment; keep the other hand in your pocket or behind your back.

    Attention: An electrical shock can occur only when there is a complete circuit. By observing the above rule, you may prevent a current from passing through your body.
  - When using testers, set the controls correctly and use the approved probe leads and accessories for that tester.
  - Stand on suitable rubber mats (obtained locally, if necessary) to insulate you from grounds such as metal floor strips and machine frames.

  Observe the special safety precautions when you work with very high voltages; Instructions for these precautions are in the safety sections of maintenance information. Use extreme care when measuring high voltages.
- Regularly inspect and maintain your electrical hand tools for safe operational condition.
- Do not use worn or broken tools and testers.
- *Never assume* that power has been disconnected from a circuit. First, *check* that it has been powered off.
- Always look carefully for possible hazards in your work area. Examples of these hazards are moist floors, nongrounded power extension cables, power surges, and missing safety grounds.
- Do not touch live electrical circuits with the reflective surface of a plastic dental mirror. The surface is conductive; such touching can cause personal injury and machine damage.
- Do not service the following parts *with the power on* when they are removed from their normal operating places in a machine:
  - Power supply units
  - Pumps
  - Blowers and fans
  - Motor generators
  - Similar units as listed above

  This practice ensures correct grounding of the units.
- If an electrical accident occurs:
  - Use caution; do not become a victim yourself.
  - Switch off power.
  - Send another person to get medical aid.

Safety inspection guide

The purpose of this inspection guide is to assist you in identifying potentially unsafe conditions. As each machine was designed and built, required safety items were installed to protect users and service technicians from injury. This guide addresses only those items. You should use good judgment to identify potential safety hazards due to attachment of non-ThinkPad features or options not covered by this inspection guide.

If any unsafe conditions are present, you must determine how serious the apparent hazard could be and whether you can continue without first correcting the problem.

Consider these conditions and the safety hazards they present:
- Electrical hazards, especially primary power (primary voltage on the frame can cause serious or fatal electrical shock)
- Explosive hazards, such as a damaged CRT face or a bulging capacitor
- Mechanical hazards, such as loose or missing hardware

To determine whether there are any potentially unsafe conditions, use the following checklist at the beginning of every service task. Begin the checks with the power off, and the power cord disconnected.

Checklist:

1. Check exterior covers for damage (loose, broken, or sharp edges).
2. Power off the computer. Disconnect the power cord.
3. Check the power cord for:
   a. A third-wire ground connector in good condition. Use a meter to measure third-wire ground continuity for 0.1 ohm or less between the external ground pin and the frame ground.
   b. The power cord should be the authorized type specified for your computer. Go to: https://support.lenovo.com/partslookup
   c. Insulation must not be frayed or worn.
4. Check for cracked or bulging batteries.
5. Remove the cover.
6. Check for any obvious non-ThinkPad alterations. Use good judgment as to the safety of any non-ThinkPad alterations.
7. Check inside the unit for any obvious unsafe conditions, such as metal filings, contamination, water or other liquids, or signs of fire or smoke damage.
8. Check for worn, frayed, or pinched cables.
9. Check that the power-supply cover fasteners (screws or rivets) have not been removed or tampered with.

Handling devices that are sensitive to electrostatic discharge

Any computer part containing transistors or integrated circuits (ICs) should be considered sensitive to electrostatic discharge (ESD.) ESD damage can occur when there is a difference in charge between objects. Protect against ESD damage by equalizing the charge so that the machine, the part, the work mat, and the person handling the part are all at the same charge.

Notes:

1. Use product-specific ESD procedures when they exceed the requirements noted here.
2. Make sure that the ESD protective devices you use have been certified (ISO 9000) as fully effective.

When handling ESD-sensitive parts:
- Keep the parts in protective packages until they are inserted into the product.
- Avoid contact with other people.
- Wear a grounded wrist strap against your skin to eliminate static on your body.
- Prevent the part from touching your clothing. Most clothing is insulative and retains a charge even when you are wearing a wrist strap.
- Use a grounded work mat to provide a static-free work surface. The mat is especially useful when handling ESD-sensitive devices.
- Select a grounding system, such as those listed below, to provide protection that meets the specific service requirement.

  Note: The use of a grounding system to guard against ESD damage is desirable but not necessary.
  – Attach the ESD ground clip to any frame ground, ground braid, or green-wire ground.

- When working on a double-insulated or battery-operated system, use an ESD common ground or reference point. You can use coax or connector-outside shells on these systems.
- Use the round ground prong of the ac plug on ac-operated computers.

Grounding requirements

Electrical grounding of the computer is required for operator safety and correct system function. Proper grounding of the electrical outlet can be verified by a certified electrician.

Safety notices (multilingual translations)

The safety notices in this section are provided in the following languages:

- English
- Arabic
- Brazilian Portuguese
- French
- German
- Hebrew
- Japanese
- Korean
- Spanish
- Traditional Chinese



DANGER

Before the computer is powered on after FRU replacement, make sure that all screws, springs, and other small parts are in place and are not left loose inside the computer. Verify this by shaking the computer and listening for rattling sounds. Metallic parts or metal flakes can cause electrical short circuits.



DANGER

Some standby batteries contain a small amount of nickel and cadmium. Do not disassemble a standby battery, recharge it, throw it into fire or water, or short-circuit it. Dispose of the battery as required by local ordinances or regulations. Use only the battery in the appropriate parts listing. Use of an incorrect battery can result in ignition or explosion of the battery.



DANGER

The battery pack contains small amounts of nickel. Do not disassemble it, throw it into fire or water, or short-circuit it. Dispose of the battery pack as required by local ordinances or regulations. Use only the battery in the appropriate parts listing when replacing the battery pack. Use of an incorrect battery can result in ignition or explosion of the battery.



DANGER

The lithium battery can cause a fire, an explosion, or a severe burn. Do not recharge it, remove its polarized connector, disassemble it, heat it above 100°C (212°F), incinerate it, or expose its cell contents to water. Dispose of the battery as required by local ordinances or regulations. Use only the battery in the appropriate parts listing. Use of an incorrect battery can result in ignition or explosion of the battery.



DANGER

If the LCD breaks and the fluid from inside the LCD gets into your eyes or on your hands, immediately wash the affected areas with water for at least 15 minutes. Seek medical care if any symptoms from the fluid are present after washing.



DANGER

To avoid shock, do not remove the plastic cover that protects the lower part of the inverter card.



DANGER

Though the main batteries have low voltage, a short-circuited or grounded battery can produce enough current to burn personnel or combustible materials.



DANGER

Unless hot swap is allowed for the FRU being replaced, do as follows before removing it: power off the computer, unplug all power cords from electrical outlets, remove the battery pack, and disconnect any interconnecting cables.



خطر

قبل اعادة تشغيل الحاسب بعد الانتهاء من استبدال FRU، تأكد من أنه قد تم اعادة كل من المسامير و السوست وكل الأجزاء الصغيرة الأخرى في أماكنهم ولم يتم فقدهم داخل الحاسب. ويمكن التحقق من ذلك عن طريق هز الحاسب والاستماع لأي صوت صاخب يصدر منه. قد تؤدي الأجزاء أو الرقائق المعدنية الى حدوث دائرة قصر.



خطر

تحتوي بعض البطاريات الاحتياطية على كمية صغيرة من مادتي النيكل والكادميوم. لا تقم بفك أو اعادة شحن البطارية الاحتياطية ولا تقم أيضا بالقاءها في النار أو الماء ولا تتسبب في احداث دائرة قصر بها. قم بالتخلص من البطارية كما هو موضح في القوانين المحلية. استخدم نوع البطارية المحدد والذي يوصى باستخدامه. حيث أنه قد يؤدي استخدام نوع بطارية غير صحيح الى اشتعالها أو انفجارها.



خطر

تحتوي حزمة البطارية على كمية صغيرة من مادة النيكل. لا تقم بفكها أو القاءها في النار أو الماء ولا تتسبب في احداث دائرة قصر بها. تخلص من حزمة البطارية وفقا لما هو موضح في القوانين المحلية. قم، عند استبدال حزمة البطارية، باستخدام الأنواع المحددة فقط والتي يوصى باستخدامها. حيث أنه قد يؤدي استخدام نوع بطارية غير صحيح الى اشتعالها أو انفجارها.



خطر

قد تتسبب بطارية الليثيوم في حدوث حريق أو انفجار أو حدوث حروق شديدة. لا تقم باعادة شحن البطارية أو ازالة موصل الاستقطاب الخاص بها ولا تحاول أيضا فكها أو تسخينها لأكثر من ١٠٠ درجة منوية (٢١٢ فهرنهايت) أو حرقها أو تعريض محتويات الخانة الخاصة بها للماء. قم بالتخلص من البطارية وفقا لما هو موضح في القوانين المحلية. استخدم نوع البطارية المحدد والذي يوصى باستخدامه. حيث أنه قد يؤدي استخدام نوع بطارية غير صحيح الى اشتعالها أو انفجارها.



خطر

اذا ما انكسرت شاشة LCD ولامس السائل الداخلي عينيك أو يديك، قم في الحال بغسلهما بالماء لمدة لا تقل عن ١٥ دقيقة. اذا ما وجدت أي أعراض بعد الغسل اطلب عندئذ المساعدة الطبية.



خطر

لتجنب التعرض لأي صدمات، لا تقم بازالة الغطاء البلاستيكي الذي يحمي الجزء الأسفل من بطاقة العاكس.



خطر

على الرغم من أن البطاريات الرئيسية يكون لها جهد منخفض، الا أنه قد تقوم البطاريات التي حدث قصور بها أو التي تم توصيلها أرضيا باصدار تيار يكفي لحدوث حروق للأفراد أو تعرض المواد القابلة للاشتعال للحريق.



خطر

ما لم يتم السماح بالتبديل الفوري لأي FRU الجاري استبداله بدون ضرورة اغلاق النظام، قم بتنفيذ ما يلي قبل ازالته: قم بايقاف تشغيل الحاسب ونزع كل أسلاك الطاقة من المخارج الكهربائية وقم أيضا بازالة حزمة البطارية ثم قم بفصل أي كابلات متصلة.



PERIGO

Antes de ligar o computador após a substituição da FRU, certifique-se de que todos os parafusos, molas e outras peças pequenas estejam no lugar e não estejam soltos dentro do computador. Verifique isso sacudindo o computador e procurando ouvir sons de peças soltas. Peças metálicas ou lascas de metal podem causar curto-circuito.



PERIGO

Algumas baterias reserva contêm uma pequena quantidade de níquel e cádmio. Não desmonte uma bateria reserva, recarregue-a, jogue-a no fogo ou na água, ou deixe-a entrar em curto-circuito. Descarte a bateria conforme requerido pelas leis ou regulamentos locais. Use somente a bateria nas partes listadas apropriadas. O uso de uma bateria incorreta pode resultar em combustão ou explosão da bateria.



PERIGO

O pacote da bateria contém uma pequena quantidade de níquel. Não o desmonte, jogue-o no fogo ou na água, ou deixe-o entrar em curto-circuito. Descarte o pacote da bateria conforme requerido pelas leis ou regulamentos locais. Use somente a bateria nas partes listadas apropriadas ao substituir o pacote da bateria. O uso de uma bateria incorreta pode resultar em combustão ou explosão da bateria.



PERIGO

A bateria de lítio pode causar incêndio, explosão ou graves queimaduras. Não a recarregue, remova seu conector polarizado, desmonte-a, aqueça-a acima de 100°C (212°F), incinere-a, ou exponha o conteúdo de sua célula à água. Descarte a bateria conforme requerido pelas leis ou regulamentos locais. Use somente a bateria nas partes listadas apropriadas. O uso de uma bateria incorreta pode resultar em combustão ou explosão da bateria.



PERIGO

Se o LCD quebrar e o fluido de dentro dele entrar em contato com seus olhos ou com suas mãos, lave as áreas afetadas imediatamente com água durante pelo menos 15 minutos. Procure cuidados médicos se algum sintoma causado pelo fluido surgir após a lavagem.



PERIGO

Para evitar choque elétrico, não remova a capa plástica que protege a parte inferior da placa inversora.



PERIGO

Embora as principais baterias possuam baixa voltagem, uma bateria em curto-circuito ou aterrada pode produzir corrente o bastante para queimar materiais de pessoal ou inflamáveis.



PERIGO

A menos que uma hot swap seja permitida para a FRU que está sendo substituída, faça o seguinte antes de removê-la: desligue o computador, desconecte todos os cabos de energia das tomadas, remova o pacote de baterias e desconecte quaisquer cabos de interconexão.



DANGER

Avant de remettre l'ordinateur sous tension après remplacement d'une unité en clientèle, vérifiez que tous les ressorts, vis et autres pièces sont bien en place et bien fixées. Pour ce faire, secouez l'unité et assurez-vous qu'aucun bruit suspect ne se produit. Des pièces métalliques ou des copeaux de métal pourraient causer un court-circuit.



DANGER

Certaines batteries de secours contiennent du nickel et du cadmium. Ne les démontez pas, ne les rechargez pas, ne les exposez ni au feu ni à l'eau. Ne les mettez pas en court-circuit. Pour les mettre au rebut, conformez-vous à la réglementation en vigueur. Lorsque vous remplacez la pile de sauvegarde ou celle de l'horloge temps réel, veillez à n'utiliser que les modèles cités dans la liste de pièces détachées adéquate. Une batterie ou une pile inappropriée risque de prendre feu ou d'exploser.



DANGER

La batterie contient du nickel. Ne la démontez pas, ne l'exposez ni au feu ni à l'eau. Ne la mettez pas en court-circuit. Pour la mettre au rebut, conformez-vous à la réglementation en vigueur. Lorsque vous remplacez la batterie, veillez à n'utiliser que les modèles cités dans la liste de pièces détachées adéquate. En effet, une batterie inappropriée risque de prendre feu ou d'exploser.



DANGER

La pile de sauvegarde contient du lithium. Elle présente des risques d'incendie, d'explosion ou de brûlures graves. Ne la rechargez pas, ne retirez pas son connecteur polarisé et ne la démontez pas. Ne l'exposez pas à une temperature supérieure à 100°C, ne la faites pas brûler et n'en exposez pas le contenu à l'eau. Mettez la pile au rebut conformément à la réglementation en vigueur. Une pile inappropriée risque de prendre feu ou d'exploser.



DANGER

Si le panneau d'affichage à cristaux liquides se brise et que vous recevez dans les yeux ou sur les mains une partie du fluide, rincez-les abondamment pendant au moins quinze minutes. Consultez un médecin si des symptômes persistent après le lavage.



DANGER

Afin d'éviter tout risque de choc électrique, ne retirez pas le cache en plastique protégeant la partie inférieure de la carte d'alimentation.



DANGER

Bien que le voltage des batteries principales soit peu élevé, le court-circuit ou la mise à la masse d'une batterie peut produire suffisamment de courant pour brûler des matériaux combustibles ou causer des brûlures corporelles graves.



DANGER

Si le remplacement à chaud n'est pas autorisé pour l'unité remplaçable sur site que vous remplacez, procédez comme suit avant de retirer l'unité : mettez l'ordinateur hors tension, débranchez tous les cordons d'alimentation des prises de courant, retirez le bloc de batterie et déconnectez tous les câbles d'interconnexion.



VORSICHT

Bevor nach einem FRU-Austausch der Computer wieder angeschlossen wird, muß sichergestellt werden, daß keine Schrauben, Federn oder andere Kleinteile fehlen oder im Gehäuse vergessen wurden. Der Computer muß geschüttelt und auf Klappergeräusche geprüft werden. Metallteile oder-splitter können Kurzschlüsse erzeugen.



VORSICHT

Die Bereitschaftsbatterie, die sich unter dem Diskettenlaufwerk befindet, kann geringe Mengen Nickel und Cadmium enthalten. Sie darf nur durch die Verkaufsstelle oder den IBM Kundendienst ausgetauscht werden. Sie darf nicht zerlegt, wiederaufgeladen, kurzgeschlossen, oder Feuer oder Wasser ausgesetzt werden. Die Batterie kann schwere Verbrennungen oder Verätzungen verursachen. Bei der Entsorgung die örtlichen Bestimmungen für Sondermüll beachten. Beim Ersetzen der Bereitschafts-oder Systembatterie nur Batterien des Typs verwenden, der in der Ersatzteilliste aufgeführt ist. Der Einsatz falscher Batterien kann zu Entzündung oder Explosion führen.



VORSICHT

Akkus enthalten geringe Mengen von Nickel. Sie dürfen nicht zerlegt, wiederaufgeladen, kurzgeschlossen, oder Feuer oder Wasser ausgesetzt werden. Bei der Entsorgung die örtlichen Bestimmungen für Sondermüll beachten. Beim Ersetzen der Batterie nur Batterien des Typs verwenden, der in der Ersatzteilliste aufgeführt ist. Der Einsatz falscher Batterien kann zu Entzündung oder Explosion führen.



VORSICHT

Die Systembatterie ist eine Lithiumbatterie. Sie kann sich entzünden, explodieren oder schwere Verbrennungen hervorrufen. Batterien dieses Typs dürfen nicht aufgeladen, zerlegt, über 100°C erhitzt oder verbrannt werden. Auch darf ihr Inhalt nicht mit Wasser in Verbindung gebracht oder der zur richtigen Polung angebrachte Verbindungsstecker entfernt werden. Bei der Entsorgung die örtlichen Bestimmungen für Sondermüll beachten. Beim Ersetzen der Batterie nur Batterien des Typs verwenden, der in der Ersatzteilliste aufgeführt ist. Der Einsatz falscher Batterien kann zu Entzündung oder Explosion führen.



VORSICHT

Die Leuchtstoffröhre im LCD-Bildschirm enthält Quecksilber. Bei der Entsorgung die örtlichen Bestimmungen für Sondermüll beachten. Der LCD-Bildschirm besteht aus Glas und kann zerbrechen, wenn er unsachgemäß behandelt wird oder der Computer auf den Boden fällt. Wenn der Bildschirm beschädigt ist und die darin befindliche Flüssigkeit in Kontakt mit Haut und Augen gerät, sollten die betroffenen Stellen mindestens 15 Minuten mit Wasser abgespült und bei Beschwerden anschließend ein Arzt aufgesucht werden.



VORSICHT

Aus Sicherheitsgründen die Kunststoffabdeckung, die den unteren Teil der Spannungswandlerplatine umgibt, nicht entfernen.



VORSICHT

Obwohl Hauptbatterien eine niedrige Spannung haben, können sie doch bei Kurzschluß oder Erdung genug Strom abgeben, um brennbare Materialien zu entzünden oder Verletzungen bei Personen hervorzurufen.



VORSICHT

Wenn ein Austausch der FRU bei laufendem Betrieb nicht erlaubt ist, gehen Sie beim Austausch der FRU wie folgt vor: Schalten Sie den Computer aus, ziehen Sie alle Netzkabel von den Netzsteckdosen ab, entfernen Sie den Akku und ziehen Sie alle miteinander verbundenen Kabel ab.



סכנה

לפני הפעלת המחשב לאחר החלפת FRU יש לוודא שכל הברגים, הקפיצים, וחלקים קטנים אחרים נמצאים במקומם ואינם חופשיים לזוז בתוך המחשב. כדי לוודא זאת, יש לטלטל את המחשב ולחקשיב לגילוי קולות שקשוק. חלקי או שבבי מתכת עלולים לגרום לקצרים חשמליים.



סכנה

סוללות המתנה מסוימות מכילות כמות קטנה של ניקל וקדמיום. אין לפרק סוללת המתנה, לטעון אותה מחדש, להשליך אותה לאש או למים או לקצר אותה. יש לסלק את הסוללה כנדרש על ידי התקנות והחוקים המקומיים. יש להשתמש רק בסוללה המופיעה ברשימת החלקים המתאימה. שימוש בסוללה לא מתאימה עלול לגרום להצתה או התפוצצות של הסוללה.



סכנה

מארז הסוללה מכיל כמות קטנה של ניקל וקדמיום. אין לפרק את מארז הסוללה, להשליך אותו לאש או למים או לקצר אותו. יש לטפל את מארז הסוללה הסוללה כנדרש על ידי התקנות והחוקים המקומיים. יש להשתמש רק בסוללה המופיעה ברשימת החלקים המתאימה בזמן החלפת מארז הסוללה. שימוש בסוללה לא מתאימה עלול לגרום להצתה או התפוצצות של הסוללה.



סכנה

סוללת הליתיום עלולה לגרום לשריפה, להתפוצצות או לכוויות קשות. אין לטעון אותה מחדש, לפרק את המחבר המקוטב שלה, לפרק אותה או לחמם אותה לטמפרטורה העולה על 100 מעלות צלזיוס. אין לשרוף את הסוללה ואין לחשוף את תוכן התא למים. יש לטפל את הסוללה כנדרש בתקנות ובחוקים המקומיים. יש להשתמש רק בסוללה המופיעה ברשימת החלקים המתאימים. שימוש בסוללה אחרת עלול לגרום לסכנת שריפה או התפוצצות.



סכנה

אם מסך הגביש הנוזלי (LCD) נשבר והנוזל מתוך המסך בא במגע עם עיניכם או ידיכם, שטפו את האזורים הנגועים מיד במים במשך 15 דקות לפחות. פנו לקבלת עזרה רפואית אם תסמינים הנובעים מהמגע עם הנוזל נמשכים לאחר השטיפה.



סכנה

כדי למנוע התחשמלות, אין להסיר את מכסה הפלסטיק המגן על חלקו התחתון של הכרטיס ההפוך.



סכנה

אף שסוללות הראשיות הן בעלות מתח נמוך, סוללה מקוצרת או מוארקת עלולה להפיק זרם מספיק לגרימת כוויות או להצתת חומרים דליקים.



סכנה

אלא אם כן מותרת 'החלפה חמה' של ה-FRU המוחלף, פעלו כדלהלן לפני הסרתו:
כבו את המחשב, נתקו את כל כבלי החשמל מהשקעים, הוציאו את מארז הסוללות ונתקו את כל הכבלים המחוברים.



危險

FRU の交換後、 ThinkPad の電源を入れる前に、ねじ、バネ、その他の小さな部品がすべて正しい位置にあり、また ThinkPad の内部で緩んでいないことを確認してください。
これを確認するには、 ThinkPad を振って、カチャカチャと音がしないか確かめます。金属部品や金属破片はショートの原因になることがあります。



危険

予備バッテリーの中には少量のニッケルとカドミウムが含まれているものがあります。したがって、予備バッテリーの分解、再充電、火または水の中への投棄、またはショートさせることは決して行わないでください。バッテリーを廃棄する場合は地方自治体の条例に従ってください。適切なパーツ・リストにあるバッテリーだけを使用してください。誤ったバッテリーを使用すると、バッテリーが発火したり、爆発したりすることがあります。



危険

バッテリー・パックには少量のニッケルが含まれています。バッテリー・パックを分解したり、火または水の中に投げ込んだり、ショートさせないでください。バッテリー・パックの廃棄にあたっては、地方自治体の条例または規則に従ってください。バッテリー・パックを交換するときは、適切なパーツ・リストにあるバッテリーだけを使用してください。誤ったバッテリーを使用すると、バッテリーが発火したり、爆発したりすることがあります。



危険

リチウム・バッテリーは、火災、爆発、または重症のやけどを引き起こすことがあります。バックアップ・バッテリーの充電、その極性コネクターの取り外し、バッテリー本体の分解、
100 ℃ (212 ˚F) 以上への加熱、焼却、電池の中身を水に浸すことはしないでください。バッテリーを廃棄する場合は地方自治体の条例に従ってください。適切なパーツ・リストにあるバッテリーだけを使用してください。誤ったバッテリーを使用すると、バッテリーが発火したり、爆発したりすることがあります。



危険

LCD が破損し、 LCD の中の液体が目に入ったり、手に触れたりした場合は、液体が触れた部分を少なくとも 15 分間洗い流してください。洗い流した後に、液体によって何らかの症状が現れた場合は、医師の治療を受けてください。



危険

感電を防ぐため、インバーター・カードの下部を保護しているプラスチック・カバーを外さないでください。



危険

メイン・バッテリーの電圧は低くても、ショートしたり、接地したバッテリーが、作業者にやけどを負わせたり、可燃物を燃やすだけの電流を発生させる場合があります。



危険

交換しようとしている FRU がホット・スワップに対応していない場合、それを取り外す前に、コンピューターの電源をオフにし、すべての電源コードをコンセントから抜き、バッテリー・パックを取り外して、相互接続しているケーブルをすべて切り離してください。



위험

FRU를 교체하고 나서 컴퓨터 전원을 켜기 전에 모든 나사, 스프링 및 기타 작은 부품들이 올바른 위치에 있는지, 컴퓨터 내부에 단단하게 연결되어 있는지 확인하십시오. 컴퓨터를 흔들어 달깍거리는 소리가 나지 않는지 확인하십시오. 금속 부품 또는 금속 조각은 누전을 일으킬 수 있습니다.



위험

일부 보조 배터리에는 소량의 니켈 및 카트뮴이 포함되어 있습니다. 보조 배터리를 분해하거나, 다시 충전하거나, 불 또는 물에 던지거나, 단락시키지 마십시오. 배터리 팩을 폐기할 때에는 해당 지역의 법률 규정을 따르십시오. 배터리 팩을 교체할 때에는 올바른 배터리만 사용하십시오. 올바르지 않은 배터리를 사용하면 배터리가 발화되거나 폭발할 수 있습니다.



위험

배터리 팩에는 소량의 니켈이 포함되어 있습니다. 배터리 팩을 분해하거나, 불 또는 물에 던지거나, 단락시키지 마십시오. 배터리 팩을 폐기할 때에는 해당 지역의 법률 규정을 따르십시오. 배터리 팩을 교체할 때에는 올바른 배터리만 사용하십시오. 올바르지 않은 배터리를 사용하면 배터리가 발화되거나 폭발할 수 있습니다.



위험

리튬 배터리는 화재, 폭발 또는 심각한 화상을 일으킬 수 있습니다. 리튬 배터리를 다시 충전하거나, 극성 커넥터를 제거하거나, 분해하거나, 100C(212F) 이상으로 가열하거나, 소각하거나, 전지 내용물을 물에 노출시키지 마십시오. 배터리를 폐기할 때에는 해당 지역을 법률 규정을 따르십시오. 올바른 배터리만 사용하십시오. 올바르지 않은 배터리를 사용하면 배터리가 발화되거나 폭발할 수 있습니다.



위험

LCD가 파손되어 LCD 내부의 액체가 눈에 들어가거나 손에 묻으면 즉시 깨끗한 물로 15분 이상 닦아 내십시오. 씻은 후에 조금이라도 이상을 느끼면 즉시 병원에 가서 의사의 진찰을 받아야 합니다.



위험

전기적 위험을 방지하려면 인버터 카드의 아래 부분을 보호하는 플라스틱 덮개를 제거하지 마십시오.



위험

기본 배터리의 전압은 낮지만, 단락되거나 접지된 배터리는 화상을 입히기에 충분한 전류와 가연성 물질을 발생시킬 수 있습니다.



위험

FRU 교체 시 Hot Swap이 지원되지 않는 경우, FRU를 제거하기 전에 컴퓨터의 전원을 끄고, 전기 콘센트에서 전원 코드를 분리하고, 배터리를 제거한 후, 연결된 모든 케이블을 분리하십시오.



PELIGRO

Antes de encender el sistema despues de sustituir una FRU, compruebe que todos los tornillos, muelles y demás piezas pequeñas se encuentran en su sitio y no se encuentran sueltas dentro del sistema. Compruébelo agitando el sistema y escuchando los posibles ruidos que provocarían. Las piezas metálicas pueden causar cortocircuitos eléctricos.



PELIGRO

Algunas baterías de reserva contienen una pequeña cantidad de níquel y cadmio. No las desmonte, ni recargue, ni las eche al fuego o al agua ni las cortocircuite. Deséchelas tal como dispone la normativa local. Utilice sólo baterías que se encuentren en la lista de piezas. La utilización de una batería no apropiada puede provocar la ignición o explosión de la misma.



PELIGRO

Las baterías contienen pequeñas cantidades de níquel. No las desmonte, ni recargue, ni las eche al fuego o al agua ni las cortocircuite. Deséchelas tal como dispone la normativa local. Utilice sólo baterías que se encuentren en la lista de piezas al sustituir la batería. La utilización de una batería no apropiada puede provocar la ignición o explosión de la misma.



PELIGRO

La batería de repuesto es una batería de litio y puede provocar incendios, explosiones o quemaduras graves. No la recargue, ni quite el conector polarizado, ni la desmonte, ni caliente por encima de los 100°C (212°F), ni la incinere ni exponga el contenido de sus celdas al agua. Deséchela tal como dispone la normativa local.



PELIGRO

Si la LCD se rompe y el fluido de su interior entra en contacto con sus ojos o sus manos, lave inmediatamente las áreas afectadas con agua durante 15 minutos como mínimo. Obtenga atención medica si se presenta algún síntoma del fluido despues de lavarse.



PELIGRO

Para evitar descargas, no quite la cubierta de plástico que rodea la parte baja de la tarjeta invertida.



PELIGRO

Aunque las baterías principales tienen un voltaje bajo, una batería cortocircuitada o con contacto a tierra puede producir la corriente suficiente como para quemar material combustible o provocar quemaduras en el personal.



PELIGRO

Salvo que se permita el intercambio en caliente para la unidad sustituible localmente, realice lo siguiente antes de extraerla: apague el sistema, desconecte todos los cables de alimentación de las tomas de alimentación eléctrica, extraiga la batería y desconecte los cables de interconexión.



危險

完成 FRU 更換之後，在開啟電腦的電源之前，請確定所有螺絲、彈簧及其他小零件都已歸位，沒有遺留在電腦內部。
若要確認這一點，請搖晃電腦，聽聽看是否有卡嗒的聲響。
金屬零件或儀錶的火花會造成電線短路。



危險

部分備用電池含有微量的鋰和鎘。請勿拆開備用電池、再充電、丟入火或水中，或使其形成短路。請按照當地法令或規定來棄置電池。

僅限使用零件清單中的電池。使用不適當的電池會導致電池起火或爆炸。



危險

電池套件含有微量的鋰。請勿拆開電池套件、丟入火或水中，或使其形成短路。請按照當地法令或規定來棄置電池套件。

更換電池套件時，僅限使用零件清單中的電池。使用不適當的電池會導致電池起火或爆炸。



危險

鋰電池會導致起火、爆炸或嚴重燒傷。請勿再充電、拔除其電極接頭、拆開、加熱超過 100°C (212°F) 、焚燒，或讓電池組成物浸到水。請按照當地法令或規定來棄置電池。
僅限使用零件清單中的電池。使用不適當的電池會導致電池起火或爆炸。



危險

如果 LCD 破裂導致 LCD 流出的液體沾到您的眼睛或手，請立即以清水沖洗沾染部位至少 15 分鐘。如果在清洗後出現該液體所造成的任何症狀，請就醫治療。



危險

為避免電擊，請勿拆下轉換卡下面的塑膠護蓋。



危險

雖然主電池的電壓很低，但短路或接地電池所產生的電流，仍足以使人燒傷或使可燃物質起火。



危險

除非 FRU 允許以熱抽換來替換，否則請依下列方式將其移除：將電腦關機，拔除插座上所有電源線，移除電池包，並拔開任何交互連接的線材。

Chapter 2. Important service information

This chapter introduces following important service information that applies to all machine types supported by this manual:

- "Strategy for replacing FRUs" on page 21
  - "Strategy for replacing an M.2 solid-state drive" on page 21
  - "Important notice for replacing a system board" on page 22
  - "How to use error message" on page 22
- "Strategy for replacing FRUs for CTO, special-bid, and standard models" on page 22
  - "Product definition" on page 22
  - "FRU identification" on page 23

Important:

- Advise customers to contact the Lenovo Support Web site at https://support.lenovo.com to view the software fixes, download the drivers, and follow the on-screen instructions to install the drivers. For additional assistance, customers might call the Lenovo Customer Support Center. Telephone numbers for the Lenovo Support Center are available at: https://pcsupport.lenovo.com/supportphonelist
- Service training documents for Lenovo authorized service technicians are available at the following Web site. The disassembly and reassembly videos that show the FRU removal and replacement procedures are contained in the documents. https://www.lenovoservicetraining.com/ion/

Strategy for replacing FRUs

Before replacing parts:

Ensure that all software fixes, drivers, and UEFI BIOS downloads are installed before replacing any FRUs listed in this manual.

After a system board is replaced, ensure that the latest UEFI BIOS is loaded to the system board before completing the service action.

To download software fixes, drivers, and UEFI BIOS, go to https://support.lenovo.com and follow the instructions on the screen.

Use the following strategy to prevent unnecessary expense for replacing and servicing FRUs:

- If you are instructed to replace a FRU but the replacement does not correct the problem, reinstall the original FRU before you continue.
- Some computers have both a processor board and a system board. If you are instructed to replace either the processor board or the system board, and replacing one of them does not correct the problem, reinstall that board, and then replace the other one.
- If an adapter or a device consists of more than one FRU, any of the FRUs may be the cause of the error. Before replacing the adapter or device, remove the FRUs, one by one, to see if the symptoms change. Replace only the FRU that changed the symptoms.

Strategy for replacing an M.2 solid-state drive

Always try to run a low-level format before replacing an M.2 solid-state drive (SSD). This will cause all customer data on the M.2 SSD to be lost. Be sure that the customer has a current backup of the data before doing this task.

© Copyright Lenovo 2021

Attention: The drive startup sequence in the computer you are servicing may have been changed. Be extremely careful during write operations such as copying, saving, or formatting. If you select an incorrect drive, data or programs can be overwritten.

Important notice for replacing a system board

Some components mounted on a system board are very sensitive. Improper handling of a system board can cause damage to those components, and may cause a system malfunction.

After replacing the system board, use the Maintenance Utility to bind the model type, serial number, and Brand ID of the computer with the new system board. Refer to https://support.lenovo.com/us/en/solutions/HT506954 for instructions on how to do that. As an alternative, you also can use the Golden Key U1 tool for that purpose. Refer to https://support.lenovo.com/us/en/solutions/ht507251 for instructions.

Attention: When handling a system board:
- Do not drop a system board or apply any excessive force to it.
- Avoid rough handling of any kind.
- Avoid bending a system board and hard pushing to prevent cracking at each BGA (Ball Grid Array) chipset.

How to use error message

Use the error codes displayed on the screen to diagnose failures. If more than one error code is displayed, begin the diagnosis with the first error code. Whatever causes the first error code may also cause false error codes. If no error code is displayed, see whether the error symptom is listed in the Symptom-to-FRU Index for the computer you are servicing.

Strategy for replacing FRUs for CTO, special-bid, and standard models

This topic provides information about the model types and FRU identification.

Product definition

This topic introduces different model types and how to identify each type.

Dynamic configure-to-order (CTO) model

This model provides the ability for a customer to configure a Lenovo solution from a Web Site, and have this configuration sent to fulfillment, where it is built and shipped directly to the customer. The machine label and eSupport will load these products as the 4-character MT, 4-character model, and 2-character country code. The model is “CTO1” and the default country code is “WW” (example: 20A7CTO1WW).

Special-bid model

This is a unique configuration that has been negotiated between Lenovo and the customer. A unique machine type model (MTM) consists of a 4-character MT, a 4-character model, and a numeric 2-character country code is provided to the customer to place orders (example: 20A7000955). The country code assigned is numeric and does not designate a specific country or region. The custom model factsheet for the MTM indicates which country the special bid MTM is set up for. Special-bid offering is not generally announced.

Standard model

Standard models (fixed configuration) are announced and offered to all customers. The MTM portion of the machine label consists of a 4-character MT, a 4-character model, and an alphabetic 2-character country code. The country code assigned is alphabetic and represents a designated country or region (example: 20A70009UK).

FRU identification

To identify FRUs for a product, do the following:

1. Go to: https://support.lenovo.com/partslookup
2. Type the Machine Type in the corresponding field to get a general FRU list, or type the Serial Number for more detailed FRU information.

Chapter 3. General checkout

This chapter introduces following information:

- “What to do first” on page 25
- “Checkout guide” on page 26
  - “Diagnosing problems” on page 26
  - “Quick test programs” on page 27
  - “UEFI diagnostic program” on page 27
  - “Bootable diagnostic programs” on page 27
- “Power system checkout” on page 28

Before you go to the checkout guide, be sure to read the following important notes.

Important notes:
- **Only certified trained personnel should service the computer.**
- **Before replacing any FRU, read the entire page on removing and replacing FRUs.**
- **When you replace FRUs, it is recommended use new nylon-coated screws.**
- **Be extremely careful during such write operations as copying, saving, or formatting.** The sequence of the drives in the computer that you are servicing might have been altered. If you select an incorrect drive, data or programs might be overwritten.
- **Replace a FRU only with another FRU of the correct model.** When you replace a FRU, ensure that the model of the machine and the FRU part number are correct by referring to the Web site: https://support.lenovo.com/partslookup
- **A FRU should not be replaced because of a single, unreproducible failure.** Single failures can occur for various reasons that have nothing to do with a hardware defect, such as cosmic radiation, electrostatic discharge, or software errors. Consider replacing a FRU only when a problem recurs. If you suspect that a FRU is defective, clear the error log and run the test again. If the error does not recur, do not replace the FRU.
- **Be careful not to replace a nondefective FRU.**

What to do first

When you return a FRU, you must include the following information in the parts exchange form or parts return form that you attach to it:

1. Name and phone number of service technician
2. Date of service
3. Date on which the machine failed
4. Date of purchase
5. Failure symptoms, error codes appearing on the display, and beep symptoms
6. Procedure index and page number in which the failing FRU was detected
7. Failing FRU name and part number
8. Machine type, model number, and serial number
9. Customer's name and address

Note: During the warranty period, the customer may be responsible for repair costs if the computer damage was caused by misuse, accident, modification, unsuitable physical or operating environment, or improper maintenance by the customer. Following is a list of some common items that are not covered under warranty and some symptoms that might indicate that the system was subjected to stress beyond normal use.

© Copyright Lenovo 2021

Before checking problems with the computer, determine whether the damage is covered under the warranty by referring to the following list:

The following are not covered under warranty:
- LCD panel cracked from the application of excessive force or from being dropped
- Scratched (cosmetic) parts
- Distortion, deformation, or discoloration of the cosmetic parts
- Plastic parts, latches, pins, or connectors that have been cracked or broken by excessive force
- Damage caused by liquid spilled into the system
- Damage caused by the improper insertion of a PC card or the installation of an incompatible card
- Improper disc insertion or use of an optical drive
- Fuses blown by attachment of a nonsupported device
- Forgotten computer password (making the computer unusable)
- Sticky keys caused by spilling a liquid onto the keyboard
- Use of an incorrect ac power adapter on laptop products

The following symptoms might indicate damage caused by nonwarranted activities:
- Missing parts might be a symptom of unauthorized service or modification.
- Check for obvious damage to a hard disk drive. If the spindle of a hard disk drive becomes noisy, the hard disk drive might have been dropped or subject to excessive force.

Checkout guide

Use the following procedures as a guide in identifying and correcting problems with the ThinkPad notebook computers.

Note: The diagnostic tests are intended to test only ThinkPad products. The use of non-ThinkPad products, prototype cards, or modified options can lead to false indications of errors and invalid system responses.

1. Identify the failing symptoms in as much detail as possible.
2. Verify the symptoms. Try to re-create the failure by running the diagnostic test or by repeating the operation.

Diagnosing problems

Many computer problems can be solved without outside assistance. If you experience a problem with your computer, the first place to start is the troubleshooting information in your computer documentation. If you suspect a software problem, see the documentation, including readme files and help information systems, that come with the operating system or program.

The Vantage app is preinstalled on your computer. It combines system information collection, security status, and support information.

Note: If you are unable to isolate and repair the problem yourself after running the program, save and print the log files created by the program. You need the log files when you speak to a Lenovo technical support representative.

The troubleshooting information or the diagnostic programs might tell you that you need additional or updated device drivers or other software. You can get the latest technical information and download device drivers and updates from the Lenovo Support Web site at:

https://support.lenovo.com

For additional information, see the help system of the program.

Quick test programs

Run quick test programs to troubleshoot and resolve computer problems, especially when the computer does not have the Vantage app installed.

To download and install a quick test program, go to https://www.lenovo.com/diags, and follow the instructions on the Web site.

To run a test using quick test program, do the following:

1. Go to the C:\SWTOOLS\ldiag directory.
2. Double-click the lsc_lite.exe file.
3. When the **User Account Control** window opens, click **Yes**.
4. Select the device class to be tested.
5. Select the devices to be tested.
6. Select the test to be performed.
7. Follow the instructions on the screen to start the test. When a problem is detected, information messages are displayed. Refer to the messages to troubleshoot the problem.

UEFI diagnostic program

A UEFI diagnostic program is preinstalled on the computer. It enables you to test internal storage devices, view system information, and check and recover bad sectors on internal storage devices.

To run the UEFI diagnostic program, do the following:

1. Turn on the computer. If the computer cannot be turned on, go to “Power system checkout” on page 28, and check the power sources. If an error code is displayed, go to “Symptom-to-FRU index” on page 34 for error code descriptions and troubleshooting hints.
2. When the ThinkPad logo is displayed, repeatedly press and release the F10 key. The main screen of the UEFI diagnostic program is displayed.
3. Follow the instructions on the screen to use the diagnostic program.

The following table displays the main items of the UEFI diagnostic program. Depending on the model, the items might differ slightly.

Table 1. Items on the main screen of the UEFI diagnostic program

Tests	Tools
• Memory quick test • Memory extended test • Memory bit fade test (180 min) • Quick storage device test • LCD test • PCI-e test • Motherboard buses test • Exit application	• System information • Generate configuration file • Execute from configuration file • Recover bad sectors tool

Note: The recover bad sectors tool is only available on computers that have hard disk drives installed.

Bootable diagnostic programs

If the computer you are servicing is not installed with the UEFI diagnostic program, you can download a bootable diagnostic program from the Lenovo Support Web site. The bootable diagnostic programs enable

you to test computer memory and internal storage devices, view system information, and check and recover the internal storage devices. To use the bootable diagnostic programs, you can create a bootable diagnostic medium on a USB device or CD.

To create a bootable diagnostic medium, do the following:

1. Go to https://www.lenovo.com/diags.
2. Click **Lenovo Bootable Diagnostics**.
3. Follow the instructions on the Web site to create a bootable diagnostic medium on a USB device or CD.

To use the diagnostic medium you have created, do one of the following:

- If you have created the bootable diagnostic medium on a USB device, do the following:
  1. Attach the USB device to the computer.
  2. Turn on the computer. If the computer cannot be turned on, go to “Power system checkout” on page 28, and check the power sources. If an error code is displayed, go to “Symptom-to-FRU index” on page 34 for error code descriptions and troubleshooting hints.
  3. When the ThinkPad logo is displayed, repeatedly press and release the F12 key. When the Boot Menu window opens, release the F12 key.
  4. Use the arrow keys to select **USB HDD** and then press Enter. The diagnostic program will be launched automatically.
  5. Follow the instructions on the screen to use the diagnostic program.
- If you have created the bootable diagnostic medium on a CD, do the following:
  1. Turn on the computer. If the computer cannot be turned on, go to “Power system checkout” on page 28, and check the power sources. If an error code is displayed, go to “Symptom-to-FRU index” on page 34 for error code descriptions and troubleshooting hints.
  2. Insert the CD into the external optical drive.
  3. Restart the computer.
  4. When the ThinkPad logo is displayed, repeatedly press and release the F12 key. When the Boot Menu window opens, release the F12 key.
  5. Use the arrow keys to select **ATAPI CDx** (x: 0, 1, ...) and then press Enter. The diagnostic program will be launched automatically.
  6. Follow the instructions on the screen to use the diagnostic program.

Power system checkout

To verify if a battery and an ac power adapter are functional, do the following:

1. Turn off the computer.
2. Connect the ac power adapter.
3. Turn on the computer. If the computer can be turned on, it means that either the battery or the ac power adapter is functional.
4. Insert a straightened paper clip into the emergency reset hole to reset the computer. If the computer is still powered on, it means that the ac power adapter is functional.
5. Turn off the computer.
6. Disconnect the ac power adapter and turn on the computer. If the computer can be turned on, it means the battery is functional.

If you suspect a power problem, see the appropriate one of the following power supply checkouts:

- “Checking the ac power adapter” on page 29
- “Checking the battery and operational charging” on page 29

Checking the ac power adapter

You are here because the computer fails only when the ac power adapter is used.

- If the power problem occurs only when the docking station or the port replicator is used, replace the docking station or the port replicator.
- If the system status indicator does not blink three times when an ac power source is connected, check the power cord of the ac power adapter for correct continuity and installation.
- If the computer does not charge during operation, go to “Checking the battery and operational charging” on page 29.

Note: Noise from the ac power adapter does not always indicate a defect.

Checking the USB-C type ac power adapter

To check the USB-C type ac power adapter, do the following:

1. Connect the computer to a power outlet and turn on the computer.
2. Start the Vantage app, and then click **Hardware Settings → Power**. The ac power adapter information is displayed.

Ensure that you use the USB-C type ac power adapter that is shipped with the computer to provide enough power to the computer. Otherwise, a message will be displayed, prompting you that the computer will not be charged or will be charged slowly.

Checking the battery and operational charging

Checking the battery

This system supports only batteries specially designed for this specific system and manufactured by Lenovo or an authorized builder. The system does not support unauthorized batteries or batteries designed for other systems. If an unauthorized battery or a battery designed for another systems is installed, the system will not charge.

Attention: Lenovo has no responsibility for the performance or safety of unauthorized batteries, and provides no warranties for failures or damage arising out of their use.

Move your pointer to the battery-status icon in the Windows® notification area to check the battery status. The battery-status icon displays the percentage of battery power remaining and how long you can use your computer before you must charge the battery.

Checking the operational charging

To check whether the battery charges properly during operation, do the following:

1. Discharge the battery until the remained battery power is less than 50%.
2. Perform operational charging. Click the battery status icon in the Windows notification area to display detailed battery information. If it indicates that the battery is not charging, replace the battery.
3. Check the battery status again. If the same error still exists, replace the system board.

Chapter 4. Related service information

This chapter presents following information:

- “Reset or restore Windows” on page 31
- “Passwords” on page 31
- “Power management” on page 34
- “Symptom-to-FRU index” on page 34

Service Web site: When the latest maintenance diskette and the system program service diskette become available, they will be posted on https://support.lenovo.com

Reset or restore Windows

To reset or restore Windows, refer to the information below：

- Use Lenovo recovery options.
  1. Go to https://support.lenovo.com/HowToCreateLenovoRecovery.
  2. Follow the on-screen instructions.
- Use Window recovery options.
  1. Go to https://pcsupport.lenovo.com.
  2. Detect your computer or manually select your computer model.
  3. Click **Diagnostics → Operating system Diagnostics** and then follow the on-screen instructions.

Passwords

As many as four passwords may be needed for any ThinkPad notebook computer: the power-on password, the hard disk password, the supervisor password, and the system management password.

If any of these passwords has been set, a prompt for it will be displayed on the screen whenever the computer is turned on. The computer does not start until the password is entered.

Note: If only a supervisor password is set, the password prompt will not be displayed when the operating system is started.

Power-on password

A power-on password protects the system from being powered on by an unauthorized person. The password must be entered before an operating system can be started. For instructions on how to remove the power-on password, see “How to remove the power-on password and system management password” on page 32.

Hard disk password

There are two kinds of hard disk passwords:
- User hard disk password - for the user
- Master hard disk password - for the system administrator, who can use it to get access to the hard disk even if the user has changed the user hard disk password

Note: There are two modes for the hard disk password: **User only** and **Master + User**. The **Master + User** mode requires two hard disk passwords; the system administrator enters both in the same operation. The system administrator then provides the user hard disk password to the system user.

© Copyright Lenovo 2021

Attention: If the user hard disk password has been forgotten, check whether a master hard disk password has been set. If it has, it can be used for access to the hard disk drive. If no master hard disk password is available, neither Lenovo nor Lenovo authorized service technicians provide any services to reset either the user or the master hard disk password, or to recover data from the hard disk drive. The hard disk drive can be replaced for a scheduled fee.

For how to remove the hard disk password, see “How to remove the hard disk password” on page 33.

Supervisor password

The supervisor password protects the system information stored in the ThinkPad Setup program. It provides the following security features:

- If only a supervisor password is set, a password prompt is displayed when you try to start the ThinkPad Setup program. Unauthorized users cannot change most of the system configuration options in the ThinkPad Setup program without the password.
- The system administrator can use the supervisor password to access a computer even if the user of that computer has set a power-on password. The supervisor password overrides the power-on password.
- The system administrator can set the same supervisor password on many ThinkPad notebook computers to make administration easier.

Attention: If the supervisor password has been forgotten and cannot be made available to the service technician, there is no service procedure to reset the password. The system board must be replaced for a scheduled fee.

System management password

The system management password can also protect the system information stored in UEFI BIOS like a supervisor password, but it has lower authority by default. The system management password can be set through the UEFI BIOS menu or through Windows Management Instrumentation (WMI) with the Lenovo client-management interface.

You can enable the system management password to have the same authority as the supervisor password to control security related features. To customize the authority of the system management password through the UEFI BIOS menu:

1. Enter the UEFI BIOS menu.
2. Select **Security → Password → System Management Password Access Control**.
3. Follow the on-screen instructions.

If you have set both the supervisor password and the system management password, the supervisor password overrides the system management password. If you have set both the system management password and the power-on password, the system management password overrides the power-on password.

How to remove the power-on password and system management password

To remove a power-on password and system management password, do the following:

If no supervisor password has been set, do the following to remove the power-on password:

1. Turn off the computer and disconnect the computer from ac power and all connected cables.
2. Insert a straightened paper clip into the emergency-reset hole for more than 10 seconds.
3. Reconnect all power resources and then the system starts automatically.

4. Wait one to two minutes until the POST ends.
5. The error code 0271 appears on the screen. The power-on password and system management password have been removed.
6. Tap F1, and then select **Date/Time → set System Date and System Time** to set system date and time.

If a supervisor password has been set and is known to the service technician, do the following to remove the power-on password and system management password:

1. Turn on the computer.
2. When the ThinkPad logo is displayed, immediately tap F1.
3. Type the supervisor password to enter the ThinkPad Setup program.
4. Select **Security → Password → Power-On Password** or **System Management Password**.
5. Enter the current supervisor password in the **Enter Current Password** field. Then leave the **Enter New Password** field blank, and tap **Save**.
6. In the Changes have been saved window, tap **Continue**.
7. Tap F10 to save changes and exit the ThinkPad Setup program. The power-on password and system management password have been removed.

How to remove the hard disk password

Attention: If **User only** mode is selected and the user hard disk password has been forgotten and cannot be made available to the service technician, neither Lenovo nor Lenovo authorized service technicians provide any services to reset the user hard disk passwords, or to recover data from the hard disk drive. To put the system back to operational status, the only Lenovo and Lenovo-authorized service solution would be to replace the hard disk drive (HDD) or SSD with a scheduled fee.

To remove a user hard disk password that has been forgotten, when the supervisor password and master hard disk password are known, do the following:

1. Turn on the computer.
2. When the ThinkPad logo comes up, immediately press F1 to enter the ThinkPad Setup program. When the power-on password icon is displayed on the screen, enter either the power-on password or the supervisor password.
3. When the user hard disk password icon is displayed on the screen, press F1. The master hard disk password icon is displayed.
4. Enter the master hard disk password to enter the ThinkPad Setup program.
5. Select **Security**.
6. Select **Password**.
7. Select **Hard-disk *x* password**, where *x* is the letter of the hard disk drive. A pop-up window opens.
8. Select **Master hard disk password**.
9. Enter the current master hard disk password in the **Enter Current Password** field. Then leave the **Enter New Password** field blank, and tap **Save**.
10. In the Changes have been saved window, tap **Continue**.
11. Press F10 to save changes and exit the ThinkPad Setup program. The user hard disk password and the master hard disk password have been removed.

Power management

Sleep mode

When the computer enters sleep mode, the screen goes blank and all internal devices are still powered on with lower power consumption.

To enter sleep mode, press Fn+4 or open the Start menu and click **Power**, and then click **Sleep**.

In certain circumstances, the computer goes into sleep mode automatically:

- After a period of inactivity specified in power plan settings
- When the battery power is low

To resume the computer from sleep mode, press the power button.

Also, in either of the following events, the computer automatically returns from sleep mode and resumes operation:

- The ring indicator (RI) is signaled by a serial device or a PC Card device.
- The time set on the resume timer elapses.

  Note: The computer does not accept any input immediately after it enters sleep mode. Wait a few seconds before taking any action to reenter operation mode.

Hibernation mode

In hibernation mode, the following occurs:

- The system status, RAM, VRAM, and setup data are stored on the hard disk.
- The system is powered off.

Note: If the computer enters the hibernation mode while it is docked to the docking station, do not undock it before resuming normal operation. If you do undock it and then try to resume normal operation, you will get an error message, and you will have to restart the system.

If you have defined one of the following actions as the event that causes the system to go into hibernation mode, perform that action.
- Closing the lid.
- Pressing the power button.

Also, the computer goes into hibernation mode automatically after a period of inactivity specified in power plan settings.

When the power is turned on, the computer returns from hibernation mode and resumes operation. The hibernation file in the boot record on the hard disk drive is read, and system status is restored from the hard disk drive.

Symptom-to-FRU index

This section contains following information:

- “Numeric error codes” on page 35
- “Error messages” on page 37
- “Beep symptoms” on page 37

- “No-beep symptoms” on page 39
- “LCD-related symptoms” on page 39
- “Intermittent problems” on page 40
- “Undetermined problems” on page 40

The symptom-to-FRU index in this section lists symptoms and errors and their possible causes. The most likely cause is listed first, in boldface type.

Note: Do the FRU replacement or other actions in the sequence shown in the column headed “FRU or action, in sequence.” If replacing a FRU does not solve the problem, put the original part back in the computer. Do not replace a nondefective FRU.

This index can also help you determine, during regular servicing, what FRUs are likely to need to be replaced next.

A numeric error is displayed for each error detected in POST or system operation. In the displays, **n** can be any number.

If no numeric code is displayed, check the narrative descriptions of symptoms. If the symptom is not described there, go to “Intermittent problems” on page 40.

Note: For a device not supported by diagnostic codes in the ThinkPad notebook computers, see the manual for that device.

Numeric error codes

Table 2. Numeric error codes

Symptom or error	FRU or action, in sequence
0177 Bad SVP data, stop POST task—The checksum of the supervisor password in the EEPROM is not correct.	**System board**
0183 Bad CRC of Security Settings in EFI Variable. Enter the ThinkPad Setup program.	1. **Run the ThinkPad Setup program, and then save current setting by pressing F10.** 2. System board
0187 EAIA data access error—The access to EEPROM is failed.	**System board**
0188 Invalid RFID Serialization Information Area.	**System board**
0189 Invalid RFID configuration information area—The EEPROM checksum is not correct.	**System board**
0190 Critical low-battery error	1. **Charge the battery.** 2. Battery
0191 System Security—Invalid Remote Change requested.	1. **Run the ThinkPad Setup program, and then save current setting by pressing F10.** 2. System board
0199 System Security— Security password retry count exceeded.	1. **Run the ThinkPad Setup program, and then save the current setting by pressing F10.** 2. System board
0270 Real Time Clock Error.	**System Real Time Clock is not functional. Have the computer serviced.**

Table 2. Numeric error codes (continued)

Symptom or error	FRU or action, in sequence
0271 Check Date and Time settings.	**Neither the date nor the time is set in the computer. Set the date and time, using the ThinkPad Setup program.**
1802 Unauthorized network card is plugged in—Turn off and remove the network card.	1. **Remove wireless network card.** 2. System board
1820 More than one external fingerprint reader is attached. Power off and remove all but the reader that you set up within your main operating system.	**Remove all but the reader that you set up for the authentication.**
2100 Detection error on HDD0 (Main HDD)	1. **Reseat the hard disk drive.** 2. Hard disk drive 3. System board
2101 Detection error on SSD1 (M.2)	1. **Reseat the M.2 solid-state drive.** 2. M.2 solid-state drive 3. System board
2102 Detection error on SSD2 (M.2)	1. **Reseat the M.2 solid-state drive.** 2. M.2 solid-state drive 3. System board
2110 Read error on HDD0 (Main HDD)	1. **Reseat the hard disk drive.** 2. Hard disk drive 3. System board
2111 Read error on SSD1 (M.2)	1. **Reseat the M.2 solid-state drive.** 2. Main M.2 solid-state drive 3. System board
2112 Read error on SSD2 (M.2)	1. **Reseat the M.2 solid-state drive.** 2. Main M.2 solid-state drive 3. System board
2200 Machine Type and Serial Number are invalid.	**System board**
2201 Machine UUID is invalid.	**System board**
2202 Brand Name is invalid.	**Have the computer serviced.**
2203 System configuration is invalid.	**Have the computer serviced.**
2204 System configuration data is invalid.	**Have the computer serviced.**

Error messages

Table 3. Error messages

Symptom or error	FRU or action, in sequence
Fan error	1. **Fan** 2. Thermal grease 3. System board
Thermal sensing error	**System board**
Bottom cover tamper detection error	**System board**
Error: The non-volatile system UEFI variable storage is nearly full.	**Note:** This error indicates that the operating system or programs cannot create, modify, or delete data in the non-volatile system UEFI variable storage due to insufficient storage space after POST. The non-volatile system UEFI variable storage is used by the UEFI BIOS and by the operating system or programs. This error occurs when the operating system or programs store large amounts of data in the variable storage. All data needed for POST, such as BIOS setup settings, chipset, or platform configuration data, are stored in a separate UEFI variable storage. Press F1 after the error message is displayed to enter ThinkPad Setup. A dialog asks the user for confirmation to clean up the storage. If the user selects “Yes”, all data that were created by the operating system or programs will be deleted except global variables defined by the Unified Extensible Firmware Interface Specification. If the user selects “No”, all data will be kept, but the operating system or programs will not be able to create, modify, or delete data in the storage. If this error happens at a service center, Lenovo authorized service personnel will clean up the non-volatile system UEFI variable storage using the preceding solution.

Beep symptoms

Lenovo SmartBeep technology enables you to decode beep errors with your smartphone when a black screen occurs with beeps from your computer. To decode the beep error with Lenovo SmartBeep technology, do the following:

1. Go to https://support.lenovo.com/smartbeep or scan the following QR Code.

2. Download the proper diagnostic app and install it on your smartphone.

3. Run the diagnostic app and place the smartphone near the computer.
4. Press the Fn key on your computer to emit the beep again. The diagnostic app decodes the beep error and shows possible solutions on the smartphone.

The following section describes some beep errors and the corresponding solutions.

Note: Do not attempt to service a product yourself unless instructed to do so by the Customer Support Center or product documentation. Only use a Lenovo-authorized service provider to repair your product.

Error codes	Solutions
0001: Reset error (platform reset not de-asserted)	1. Remove the ac power adapter and the removable battery if your computer has one. Then, reset the computer by doing one of the following: • For models with the emergency-reset hole, insert a straightened paper clip into the emergency-reset hole. Wait for one minute. Then, reconnect all power resources and restart the computer. • For models without the emergency-reset hole, press and hold the power button for about seven seconds. Then, reconnect to all power resources and restart the computer. 2. Replace the system board (service provider only).
0002: Internal bus error	Replace the system board (service provider only).
0281: General embedded controller error	Replace the system board (service provider only).
0282: Memory module error	1. Reinstall or replace the memory module. 2. Replace the system board (service provider only).
0283: PCI resource error	1. Remove PCIe devices (the M.2 card, PCIe card, and so on) (service provider only). 2. Replace the system board (service provider only).
0284: TCG-compliant functionality-related error (might be the BIOS code validation failure)	Replace the system board (service provider only).
0285: TCG-compliant functionality-related error (might be the TPM initialization failure)	Replace the system board (service provider only).
0286: Integrated graphics error	Replace the system board (service provider only).
0287: Discrete graphics error	1. Reinstall or replace the discrete graphics card (service provider only). 2. Replace the system board (service provider only).
0288: Computer display error	1. Reconnect the display cable on both the system board side and the computer display side (service provider only). 2. Replace the system board (service provider only).

No-beep symptoms

Table 4. No-beep symptoms

Symptom or error	FRU or action, in sequence
No beep, system-status indicator on, LCD blank, and no POST.	1. **Run LCD Self Test**. 2. Ensure that every connector is connected tightly and correctly. 3. Reseat memory module. 4. Replace the system board.
No beep, system-status indicator on, and LCD blank during POST.	1. **Run LCD Self Test**. 2. Reseat memory module. 3. Replace the system board.
The power-on password prompt appears.	A power-on password or a supervisor password is set. Type the password and press **Enter**.
The hard-disk password prompt appears.	A hard-disk password is set. Type the password and press **Enter**.

LCD-related symptoms

Important: The TFT LCD for the notebook computer contains many thin-film transistors (TFTs). The presence of a small number of dots that are missing, discolored, or always lighted is characteristic of TFT LCD technology, but excessive pixel problems can cause viewing concerns.If the LCD you are servicing has two or less visible defective pixels, it should not be considered faulty. However, if the LCD has three or more visible defective pixels, it will be deemed as defective by Lenovo and it should be replaced.

Notes:

- This policy applies to all ThinkPad notebooks purchased on 1 January, 2008 or later.
- Lenovo will not provide warranty replacement if the LCD is within specifications because we cannot guarantee that any replacement LCD will have zero pixel defects.
- One pixel consists of R, G, B sub-pixels.

LCD Self Test

When you turn on the computer and the LCD goes black, run LCD Self Test to help you determine whether the LCD functions normally.

To run LCD Self Test:

1. Ensure that the computer is connected to ac power. Then, press the power button for about seven seconds to turn off the computer.
2. Press Fn, left Ctrl, and the power button at the same time. If the computer displays five solid colors in sequence across the entire screen, it indicates that the LCD functions normally.
3. The test lasts for about 20 seconds and then exits automatically. You also can press the power button to exit the test.

Table 5. LCD-related symptoms

Symptom or error	FRU or action, in sequence
No beep, power-on indicator on, and a blank LCD during POST.	1. **Run LCD Self Test**. 2. Replace the system board.
• LCD backlight not working. • LCD too dark. • LCD brightness cannot be adjusted. • LCD contrast cannot be adjusted.	1. **Reseat the LCD connectors**. 2. Replace the LCD assembly. 3. Replace the system board.
• LCD screen unreadable. • Characters missing pixels. • Screen abnormal. • Wrong color displayed.	1. **See important note for "LCD-related symptoms."** 2. Reseat the LCD connectors. 3. Replace the LCD assembly. 4. Replace the system board.
Horizontal or vertical lines displayed on LCD.	**Replace the LCD assembly.**

Intermittent problems

Intermittent system hang problems can be due to a variety of causes that have nothing to do with a hardware defect, such as cosmic radiation, electrostatic discharge, or software errors. FRU replacement should be considered only when a problem recurs.

When analyzing an intermittent problem, do the following:

1. Run the diagnostic test for the system board in loop mode **at least 10 times**.
2. If no error is detected, do not replace any FRUs.
3. If any error is detected, replace the FRU shown by the FRU code. Rerun the test to verify that no more errors exist.

Undetermined problems

If the diagnostic tests did not identify the adapter or device that has failed, if wrong devices are installed, or if the system simply is not operating, follow these procedures to isolate the failing FRU (do not isolate FRUs that have no defects).

Verify that all attached devices are supported by the computer.

Verify that the power supply being used at the time of the failure is operating correctly. See "Power system checkout" on page 28.

1. Turn off the computer.
2. Visually check each FRU for damage. Replace any damaged FRU.
3. Remove or disconnect all of the following devices:
   a. Non-ThinkPad devices
   b. Printer, mouse, and other external devices
   c. External diskette drive or optical drive
   d. Wireless cards
4. Turn on the computer.
5. Determine whether the problem has been solved.
6. If the problem does not recur, reconnect the removed devices one at a time until you find the failing FRU.
7. If the problem remains, replace the following FRUs one at a time (do not replace a nondefective FRU):
   a. System board
   b. LCD assembly

Chapter 5. Special keys

The special keys on the keyboard help you work more easily and effectively.

	Invoke the special function printed as an icon on each key or standard function of F1–F12 function keys. FnLock indicator on: standard function FnLock indicator off: special function
	Enable / disable speakers
	Decrease volume
	Increase volume
	Enable / disable microphones
	Darken display
	Brighten display
	Manage external displays
	Enable / disable wireless
	Open / collapse notification center
	Answer incoming calls on Microsoft Teams
	Decline incoming calls on Microsoft Teams
	Customize the function of this key on Vantage app.
	Open Snipping Tool
	Toggle keyboard backlight
	Break operation
	Pause operation

© Copyright Lenovo 2021

	Scroll contents
	Send system request
	Enter sleep mode To wake up the computer, press Fn or the power button.
	Go to beginning
	Go to end

Chapter 6. Locations

This chapter introduces the locations of the hardware components on your computer.

Locating computer controls, connectors, and indicators

This topic introduces the locations of the computer controls, connectors, and indicators.

Overview

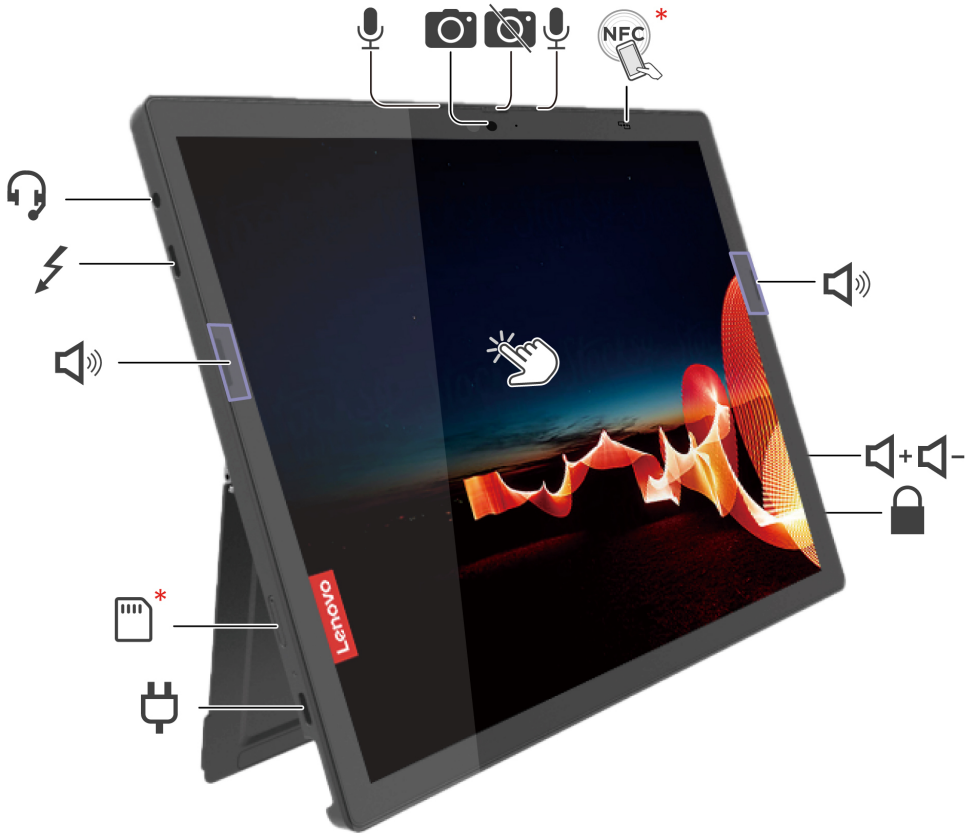

	Infrared (IR) Camera* / Camera*		Webcam privacy shutter (Camera cover)
	Microphone		NFC mark*
	Speaker		Volume up button
	Volume down button		Security-lock slot
	Power connector (USB-C®)		Nano-SIM-card tray /eSIM-card tray*

© Copyright Lenovo 2021

	Thunderbolt™ 4 connector (USB-C)		Audio connector
	Touch screen		

* for selected models



	Power button		Rear Camera
	Emergency-reset hole		

Locating FRUs and CRUs

This topic introduces the following service parts:

- “Major FRUs” on page 46
- “Miscellaneous parts and other FRUs” on page 48
- “Connector and cable guide” on page 48

Notes:

- **CRU statement for customers:**
  You can resolve some problems with your product with a replacement part you can install yourself, called a “Customer Replaceable Unit” or “CRU.” Some CRUs are designated as self-service CRUs and others are designated as optional-service CRUs. *Installation of self-service CRUs is your responsibility. For optional-service CRUs, you can either install the CRU yourself or you can request that a Service Provider install the CRU according to the warranty service for your product.* If you intend on installing the CRU, Lenovo will ship the CRU to you. CRU information and replacement instructions are shipped with your product and are available from Lenovo at any time upon request. You can find a list of CRUs for your product in this *Hardware Maintenance Manual*. An electronic version of this manual can be found at https://support.lenovo.com. Click **Documentation** and then follow the on-screen instructions to find the

manual for your product. You might be required to return the defective part that is replaced by the CRU. When return is required: (1) return instructions, a prepaid shipping label, and a container will be included with the replacement CRU; and (2) you might be charged for the replacement CRU if Lenovo does not receive the defective CRU within thirty (30) days of your receipt of the replacement CRU. See your Lenovo Limited Warranty documentation for full details.

ThinkPad computers contain the following types of CRUs and FRUs:

- **Self-service CRUs:** Refer to parts that can be installed or replaced easily by customer themselves or by trained service technicians at an additional cost.
- **Optional-service CRUs:** Refer to parts that can be installed or replaced by customers with a greater skill level. Trained service technicians can also provide service to install or replace the parts under the type of warranty designated for the customer's machine.
- **FRUs:** Refer to parts that must be installed or replaced only by trained service technicians. If customers choose to replace the FRUs by themselves, the product warranty might be affected.

- Each FRU/CRU is available for all types or models, unless otherwise specified.

Major FRUs

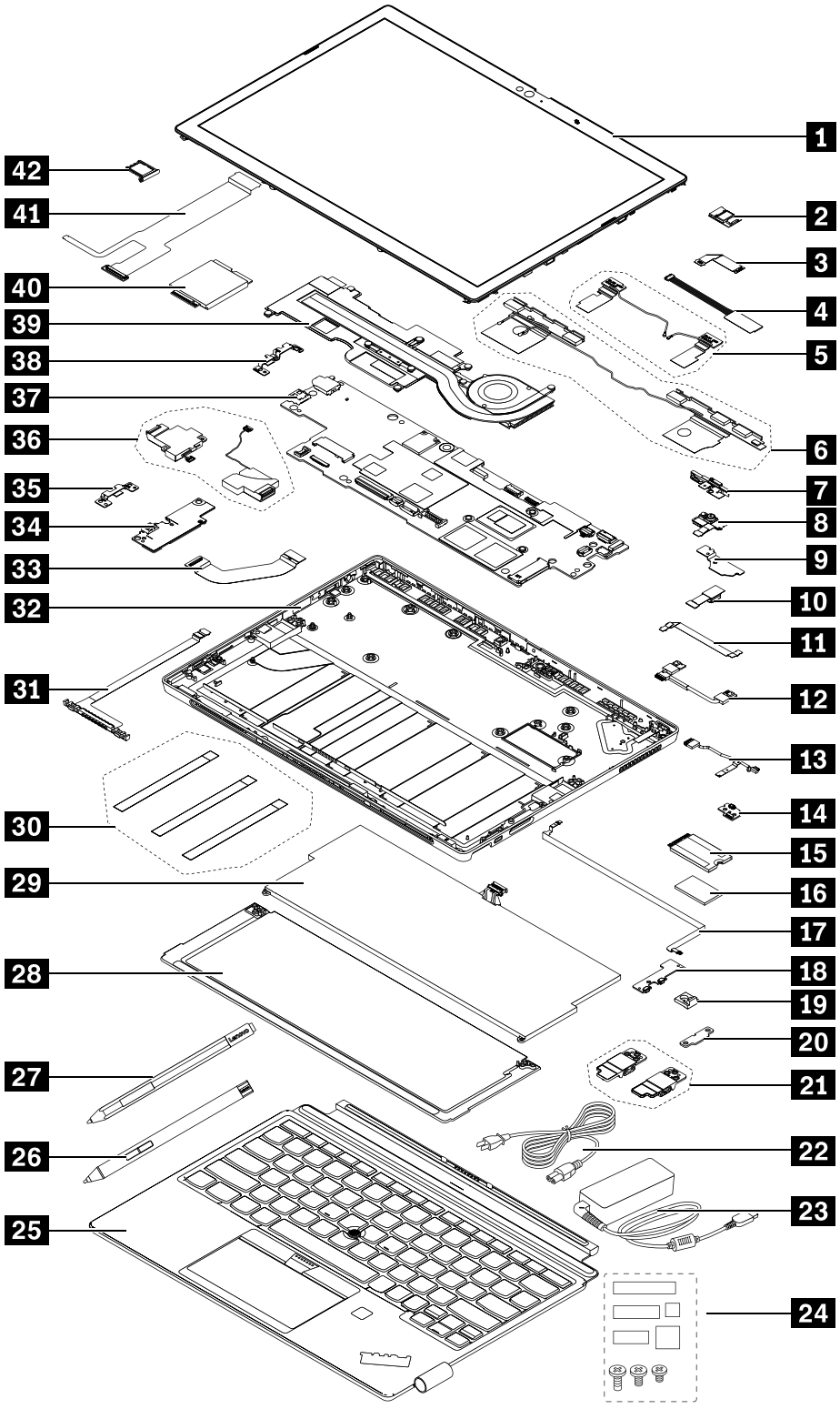
1
2
3
4
5
6
7
8
9
10
11
12
13
14
15
16
17
18
19
20
21
22
23
24
25
26
27
28
29
30
31
32
33
34
35
36
37
38
39
40
41
42

No.	FRU descriptions	Self-service CRU	Optional-service CRU
1	LCD module	No	No
2	NFC module*	No	No
3	NFC module cable*	No	No
4	NFC antenna*	No	No
5	Wireless-LAN antenna assembly	No	No
6	Wireless-WAN antenna assembly*	No	No
7	Webcam privacy shutter	No	No
8	Front camera module	No	No
9	Front camera bracket	No	No
10	Rear camera	No	No
11	P-sensor cable*	No	No
12	Microphone assembly	No	No
13	Power board cable	No	No
14	Power board	No	No
15	M.2 solid-state drive	No	No
16	Thermal pad for M.2 solid-state drive	No	No
17	Volume board cable	No	No
18	Volume board	No	No
19	Hook holder for bezel	No	No
20	Security-lock bracket	No	No
21	Hinges	No	No
22	Power cord	Yes	No
23	ac power adapter	Yes	No
24	Miscellaneous parts (See “Miscellaneous parts and other FRUs” on page 48.)	No	No
25	ThinkPad X12 Detachable Folio Keyboard*	Yes	No
26	Lenovo Digital Pen*	Yes	No
27	Lenovo Precision Pen*	Yes	No
28	Kickstand	No	No
29	Built-in battery	No	No
30	Removable tape	No	No
31	Pogo pin cable	No	No
32	Back cover assembly	No	No
33	USB-C board cable	No	No
34	USB-C board	No	No
35	USB-C board bracket	No	No

No.	FRU descriptions	Self-service CRU	Optional-service CRU
36	Speakers	No	No
37	System board	No	No
38	I/O bracket	No	No
39	Thermal fan assembly	No	No
40	Wireless-WAN card*	No	No
41	LCD cable	No	No
42	Nano-SIM-card tray	Yes	No

* for selected models

Miscellaneous parts and other FRUs

FRU descriptions	Self-service CRU	Optional-service CRU
Screw kit: • Screw M2 × L2.5 mm, Black (23) • Screw M2 × L2 mm, Black (1) • Screw M2 × L2 mm, Silver(1) • Screw M2 × L3.5 mm, Black (6) • Screw M1.6 × L2.4 mm, Silver (4) • Screw M2 × L2.15 mm, Silver (1)	No	No
Label kit	No	No

Connector and cable guide

This section provides information for Lenovo authorized service technicians to help identify connectors and cables for replacement purpose. To view each FRU and the exploded illustration of the computer, see “Major FRUs” on page 46.

Note: Depending on your model, some connectors or cables might not be available.

System board connectors and cables

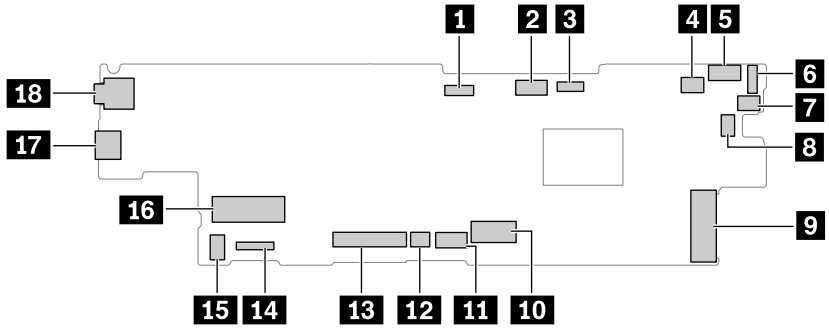

Item	Connector (location)	Internal cable required	Cable connection
1	Microphone assembly connector (internal)	The microphone assembly comes with the cable.	The microphone assembly comes with the cable. Connect the cable to this connector.
2	Front camera module connector (internal)	The front camera module comes with the cable.	The front camera module comes with the cable. Connect the cable to this connector.

Item	Connector (location)	Internal cable required	Cable connection
3	Rear camera connector (internal)	The rear camera comes with the cable.	The rear camera comes with the cable. Connect the cable to this connector.
4	P-sensor connector (internal)	P-sensor cable	The wireless-WAN antenna assembly comes with cables. Connect the P-sensor cable to this connector.
5	NFC module connector (internal)	NFC module cable	The NFC module comes with the cable. Connect the cable to this connector.
6	Power board connector	Power board cable	The power board comes with the cable. Connect the cable to this connector.
7	Speaker connector (near the M.2 solid-state drive slot) (internal)	The speaker comes with the cable.	The speaker comes with the cable. Connect the cable to this connector.
8	Thermal fan assembly connector (internal)	The thermal fan assembly comes with the cable.	The thermal fan assembly comes with cable. Connect the cable to this connector.
9	M.2 solid-state drive slot (internal)	No	Insert an M.2 solid-state drive into this slot.
10	Built-in battery connector (internal)	The built-in battery comes with the cable.	The built-in battery comes with the cable. Connect the cable to this connector.
11	Pogo pin connector (internal)	Pogo pin cable	The pogo pin comes with the cable. Connect the cable to this connector.
12	Volume board connector (internal)	Volume board cable	The volume board comes with the cable. Connect the cable to this connector.
13	LCD module connector (internal)	LCD cable	The LCD module comes with the cable. Connect the cable to this connector.
14	USB-C board connector (internal)	USB-C board cable	The USB-C board comes with the cable. Connect the cable to this connector.
15	Speaker connector (near the Wireless-WAN card slot) (internal)	The speaker comes with the cable.	The speaker comes with the cable. Connect the cable to this connector.
16	Wireless-WAN card slot (internal)	No	Insert a Wireless-WAN card into this slot.
17	Thunderbolt 4 connector (USB-C) (external)	No	Connect USB-C compatible devices to this connector.
18	Audio connector (external)	No	Connect headphones or a headset to this connector.

Looking up FRU information

For detailed FRU information, including part numbers, descriptions, and substitution part numbers, go to https://support.lenovo.com/partslookup.

Chapter 7. FRU replacement notices

This chapter presents notices related to removing and replacing parts. Read this chapter carefully before replacing any FRU.

CRU statement for customers:
You can resolve some problems with your product with a replacement part you can install yourself, called a "Customer Replaceable Unit" or "CRU." Some CRUs are designated as self-service CRUs and others are designated as optional-service CRUs. *Installation of self-service CRUs is your responsibility. For optional-service CRUs, you can either install the CRU yourself or you can request that a Service Provider install the CRU according to the warranty service for your product.* If you intend on installing the CRU, Lenovo will ship the CRU to you. CRU information and replacement instructions are shipped with your product and are available from Lenovo at any time upon request. You can find a list of CRUs for your product in this *Hardware Maintenance Manual*. An electronic version of this manual can be found at https://support.lenovo.com. Click **Guides & Manuals** and then follow the on-screen instructions to find the manual for your product. You might be required to return the defective part that is replaced by the CRU. When return is required: (1) return instructions, a prepaid shipping label, and a container will be included with the replacement CRU; and (2) you might be charged for the replacement CRU if Lenovo does not receive the defective CRU within thirty (30) days of your receipt of the replacement CRU. See your Lenovo Limited Warranty documentation for full details.

Service tool kit

Ensure that the following service tool kit is prepared before you service a ThinkPad notebook computer.

No.	Tool name	Tool type
1	Phillips-head screwdriver	Common tool
2	Torx-head screwdriver	Common tool
3	Conductive tweezers	Common tool
4	Hexagonal socket	Common tool
5	Silicone grease	Consumable tool
6	Polyamide tape	Consumable tool
7	Mylar tape	Consumable tool
8	Eraser	Consumable tool
9	Electrical tape	Consumable tool
10	Double-sided tape	Consumable tool
11	Conductive tape	Consumable tool

Note: The silicone grease can be applied to the surfaces of the microprocessor and heatsink to eliminate air gaps. The hexagonal socket is used to pick up the antenna connectors.

Screw notices

Loose screws can cause a reliability problem. In the ThinkPad notebook computer, this problem is addressed with special nylon-coated screws that have the following characteristics:

© Copyright Lenovo 2021

- They maintain tight connections.
- They do not easily come loose, even with shock or vibration.
- They are harder to tighten.

Do the following when you service this machine:

- Keep the screw kit in your tool bag. For the part number of the screw kit, go to https://support.lenovo.com/partslookup.
- It is recommended to use new screws.
- It is recommended to use each screw only once.

Tighten screws as follows:

- **Plastic to plastic**
  Turn an additional 90 degrees after the screw head touches the surface of the plastic part.

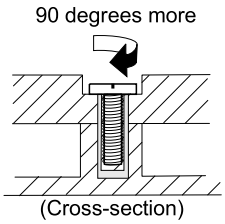

- **Logic card to plastic**
  Turn an additional 180 degrees after the screw head touches the surface of the logic card.

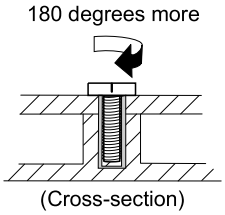

Notes:

- Ensure that you use the correct screw. It is recommended to use new screws for replacements. If you have a torque screwdriver, tighten all screws firmly to the torque specified in the screw information table for each step.
- Ensure that torque screwdrivers are calibrated correctly following country specifications.

Retaining serial numbers

This section includes the following descriptions:

- “Restoring the serial number of the system unit” on page 52
- “Retaining the UUID” on page 53
- “Reading or writing the ECA information” on page 54

Restoring the serial number of the system unit

When the computer was manufactured, the EEPROM on the system board was loaded with the serial numbers of the system and all major components. These numbers need to remain the same throughout the life of the computer.

If you replace the system board, you must restore the serial number of the system unit to its original value.

The serial number of the system unit is written on the label attached to the bottom of the computer.

If you cannot find the serial number of the system unit on the bottom of the computer, try the following method to get the number:

Note: Before you perform the operation, ensure that the UEFI/Legacy setting within the **Startup** menu in the ThinkPad Setup program is set to **UEFI Only**.

1. Connect a USB memory key to the computer.
2. Go to https://www.lenovo.com/maintenanceutilities and follow the instructions on the screen to create a Maintenance Key.

   Note: Only an authorized Lenovo service technician can access the above Web site.
3. Restart the computer.
4. When the logo is displayed, press Esc. The ThinkPad Config Information Update Utility interface is displayed.
5. Type 1 under **Enter the action desired**, then press Enter. The ThinkPad Serial Number Update Utility for Asset ID screen is displayed.
6. Type 2 under **Enter the action desired**, then press Enter. The serial number of each device in your computer is displayed; the serial number of the system unit is listed as follows:
   20- Serial number
7. Record the serial number of the system unit.

After you replace the system board, do the following to restore the serial number of the system unit:

1. Connect the Maintenance Key to the computer.
2. When the logo is displayed, press Esc. The ThinkPad Config Information Update Utility interface is displayed.
3. Type 1 under **Enter the action desired**, then press Enter. The ThinkPad Serial Number Update Utility for Asset ID screen is displayed.
4. Type 1 under **Enter the action desired**, then press Enter. Then follow the instructions on the screen to restore the serial number of the system unit.

Retaining the UUID

The Universally Unique Identifier (UUID) is a 128-bit number uniquely assigned to your computer at production and stored in the EEPROM of your system board.

The algorithm that generates the number is designed to provide unique IDs until the year A.D. 3400. No two computers in the world have the same number.

When you replace the system board, perform the following steps to create a new UUID for the system board if the system board does not have a UUID:

Note: Before you perform the operation, ensure that the UEFI/Legacy setting within the **Startup** menu in the ThinkPad Setup program is set to **UEFI Only**.

1. Connect a USB memory key to the computer.
2. Go to https://www.lenovo.com/maintenanceutilities and follow the instructions on the screen to create a Maintenance Key.

   Note: Only an authorized Lenovo service technician can access the above Web site.
3. Restart the computer.
4. When the logo screen is displayed, press Esc. The ThinkPad Config Information Update Utility interface is displayed.

5. Type 2 under **Enter the action desired**, then press Enter. The Auto UUID generation utility interface is displayed.
6. Type y under **Change UUID. OK? [Y/N]**, then press Enter. A new UUID is created and written. If a valid UUID already exists, it is not overwritten.

Reading or writing the ECA information

Information on Engineering Change Announcements (ECA) is stored in the EEPROM of the system board. The electronic storage of this information simplifies the procedure to check if the ECA has been previously applied to a machine. The machine does not need to be disassembled to check for the ECA application.

To check what ECAs have been previously applied to the machine, use the ECA Information Read/Write function on the USB Maintenance Key.

1. Insert the Maintenance Key and restart the computer.
2. From the main menu, select **6. Set ECA Information**.
3. To read the ECA information, select **2. Read ECA/rework number from EEPROM** and follow the instructions on the screen.
4. To read the box build date, select **5. Read box build date from EEPROM**, and follow the instruction on the screen.

After an ECA has been applied to the machine, the EEPROM must be updated to reflect the ECA's application. Use the Maintenance Key to update the EEPROM.

Note: Only the ECA number is stored in the EEPROM. The machine type of the ECA is assumed to be the same as the machine type of the machine that had the ECA applied to it.

1. Insert the Maintenance Key and restart the computer.
2. From the main menu, select **6. Set ECA Information**.
3. To write the ECA information, select **1. Write ECA/rework number from EEPROM**, and follow the instructions on the screen.
4. To write the box build date, select **4. Write box build date from EEPROM**, and follow the instruction on the screen.

If the system board is being replaced, try to read the ECA information from the old system board and transfer the information to the new system. If the system board is inoperable, this will not be possible.

Chapter 8. Removing or replacing a FRU

This chapter provides instructions on how to remove or replace a FRU.

CRU statement for customers:

You can resolve some problems with your product with a replacement part you can install yourself, called a "Customer Replaceable Unit" or "CRU." Some CRUs are designated as self-service CRUs and others are designated as optional-service CRUs. *Installation of self-service CRUs is your responsibility. For optional-service CRUs, you can either install the CRU yourself or you can request that a Service Provider install the CRU according to the warranty service for your product.* If you intend on installing the CRU, Lenovo will ship the CRU to you. CRU information and replacement instructions are shipped with your product and are available from Lenovo at any time upon request. You can find a list of CRUs for your product in this *Hardware Maintenance Manual*. An electronic version of this manual is available for downloading at https://support.lenovo.com. You might be required to return the defective CRU. When return is required: (1) return instructions, a prepaid shipping label, and a container will be included with the replacement CRU; and (2) you might be charged for the replacement CRU if Lenovo does not receive the defective part within thirty (30) days of your receipt of the replacement CRU. See your Lenovo Limited Warranty documentation for full details.

General guidelines

When removing or replacing a FRU, be sure to observe the following general guidelines:

1. Do not try to service any computer unless you have been trained and certified. An untrained person runs the risk of damaging parts.
2. Before replacing any FRU, review Chapter 7 "FRU replacement notices" on page 51.
3. Begin by removing any FRUs that have to be removed before replacing the failing FRU. Any such FRUs are listed at the beginning of each FRU replacement section. Remove them in the order in which they are listed.
4. Follow the correct sequence in the steps for removing a FRU, as given in the drawings by the numbers in square callouts.
5. When turning a screw, turn it in the direction as given by the arrow in the drawing.
6. When removing a FRU, move it in the direction as given by the arrow in the drawing.
7. To put the new FRU in place, reverse the removal procedure and follow any notes that pertain to replacement.
8. When replacing a FRU, use the correct screws as shown in the replacement procedures.

DANGER

Before removing any FRU, turn off the computer, unplug all power cords from electrical outlets, disconnect any interconnecting cables, and then disable the built-in battery.

Attention: After replacing a FRU, do not turn on the computer until you have made sure that all screws, springs, and other small parts are in place and none are loose inside the computer. Verify this by shaking the computer gently and listening for rattling sounds. Metallic parts or metal flakes can cause electrical short circuits.

Attention: The system board is sensitive to, and can be damaged by, electrostatic discharge (ESD). Before touching it, establish personal grounding by touching a ground point with one hand or by using an ESD strap.

© Copyright Lenovo 2021

Before servicing the computer

Carefully read this topic before servicing the computer.

Removing external devices

Before you start servicing, ensure that you remove all external devices installed by the customer, such as MicroSD card, dock, and external display.

Disabling the built-in battery

Before replacing any FRU/CRU, ensure that you disable the built-in battery.

To disable Fast Startup, do the following:

1. Go to Control Panel, and then change the view of Control Panel from Category to Large icons or Small icons.
2. Click **Power Options**, and then click **Choose what the power buttons do** on the left pane.
3. Click **Change settings that are currently unavailable** at the top.
4. If prompted by User Account Control (UAC), click **Yes**.
5. Clear the **Turn on fast startup** check box, and then click **Save changes**.

To disable the built-in battery, do the following:

1. Turn off the computer and disconnect the computer from ac power and all connected cables.
2. Restart the computer. When the logo screen is displayed, immediately press F1 to enter ThinkPad Setup.
3. Select **Config → Power**. The **Power** submenu is displayed.
4. Select **Disable built-in battery** and press Enter.
5. Select **Yes** in the Setup Confirmation window. The built-in battery is disabled and the computer turns off automatically. Wait three to five minutes to let the computer cool.

Removing the nano-SIM card and the nano-SIM-card tray (for selected models)

If the computer you are servicing has a nano-SIM card installed, remove the nano-SIM card and the nano-SIM-card tray before you start the servicing.

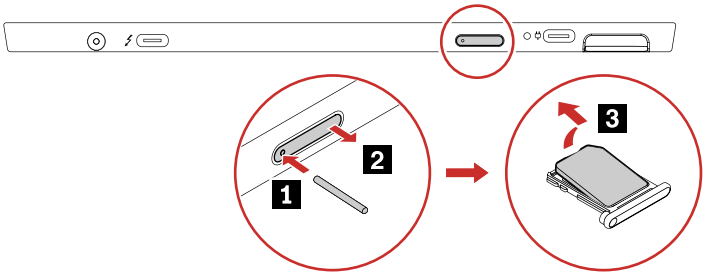

After you finish the servicing, ensure that you install the card and the tray back into the slot firmly.

Removing a major FRU

This section provides instructions on how to remove a major FRU.

1010 LCD module

Removal steps

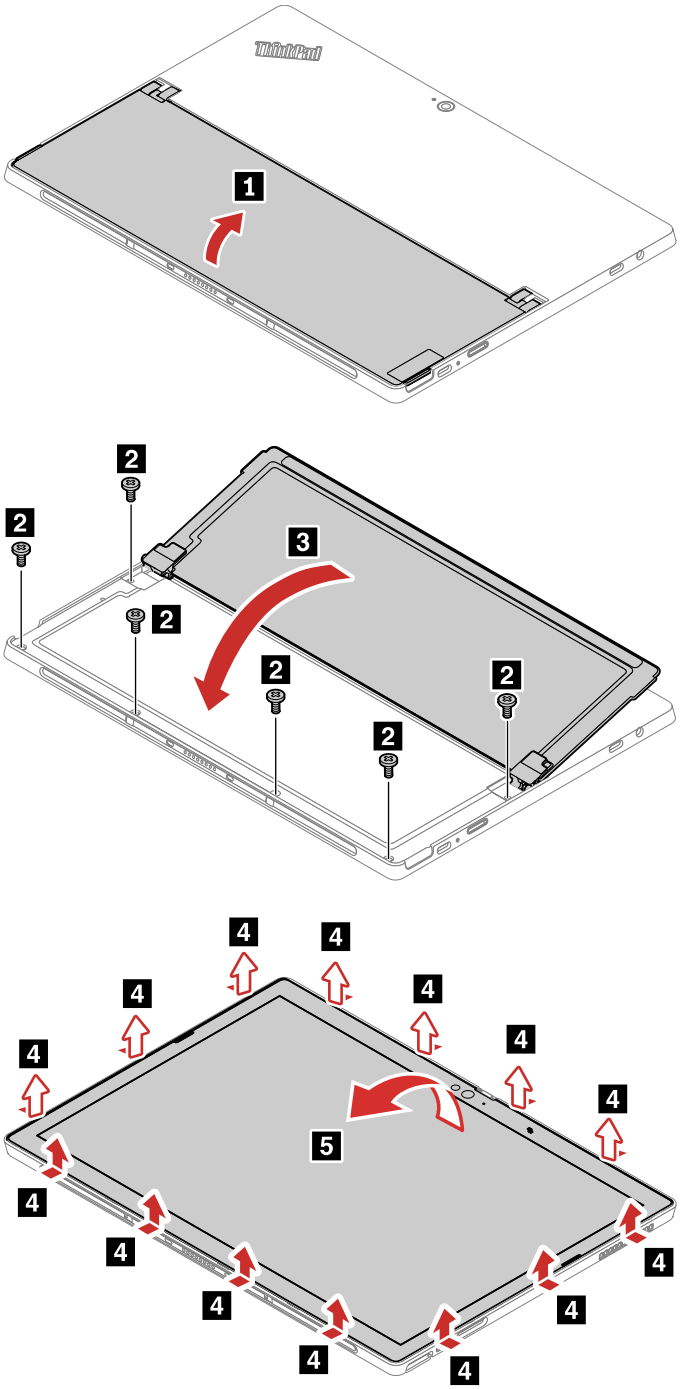

Remember to remove the mylar or the tape before you start the following steps.

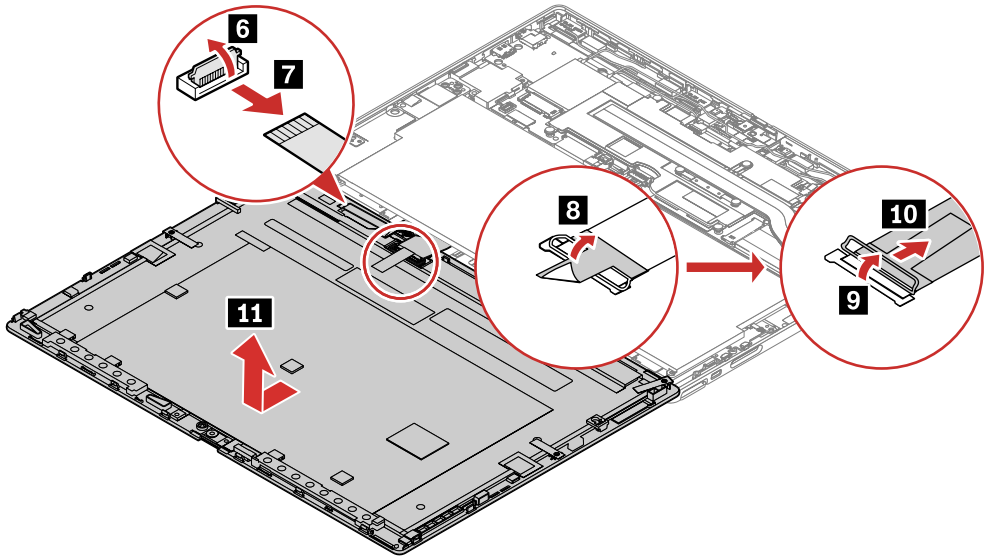

Step	Screw (quantity)	Color	Torque
2	M2 × L3.5 mm, flat-head, nylon-coated (6)	Black	0.181 Nm (1.85 kgf-cm)

Label locations on the back cover assembly

The following illustration shows the location of each label.

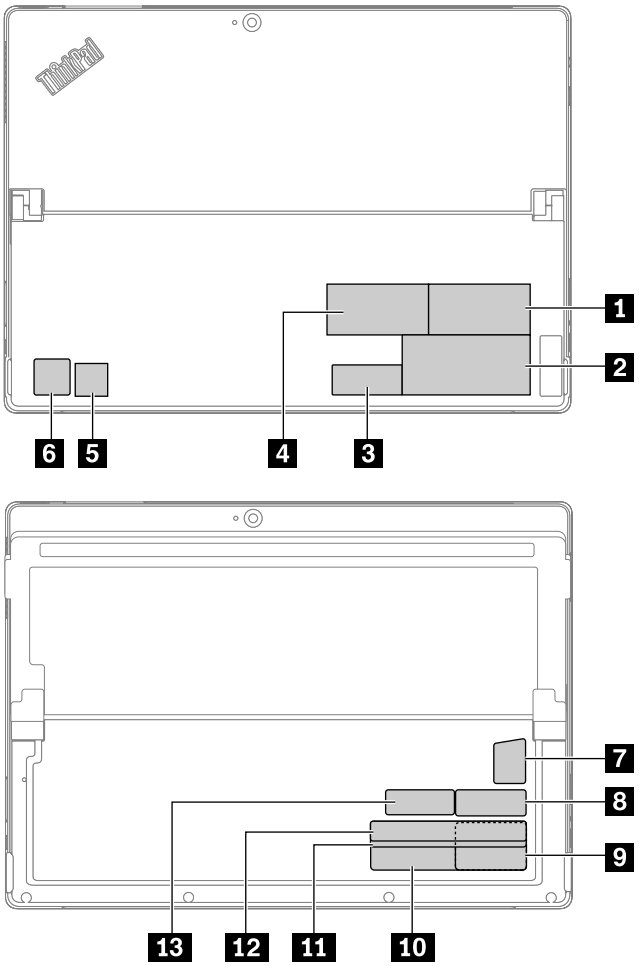

1 Asset tag_40Y917Y

2 Country label

3 IMEI label

4 Asset tag

5 Energy Star label

6 Intel label

7 Windows label

8 Serial number label

9 Korea/EU GEO label

10 India/TW label

11 China (CECP) GEO label

12 China GEO label

13 China CECP label

1020 Built-in battery

Important notices for replacing a battery

Attention: Lenovo has no responsibility for the performance or safety of unauthorized batteries, and provides no warranties for failures or damage arising out of their use.

The Lenovo Solution Center program provides an automatic battery diagnostic test that determines if the battery is defective. A battery FRU should not be replaced unless this diagnostic test shows that the battery is defective. The only exception to this is if the battery is physically damaged or a customer is reporting a possible safety issue.

If the Lenovo Solution Center program is not installed on the computer, the customer should download and install the program to diagnose the battery, before getting a non-physically damaged battery replaced. Note that the replacement of a physically damaged battery is not covered by the warranty.

For access, remove this FRU:
- “1010 LCD module” on page 57

Removal steps

DANGER

Use only the authorized battery specified for your computer. Any other battery could ignite or explode.

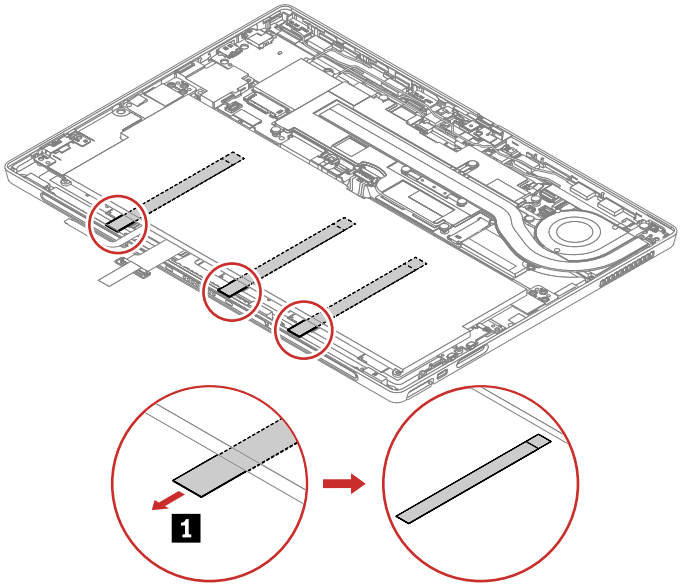

Note: The tapes for securing the built-in battery are not reusable. Whenever the built-in battery is removed, you should order new tapes.

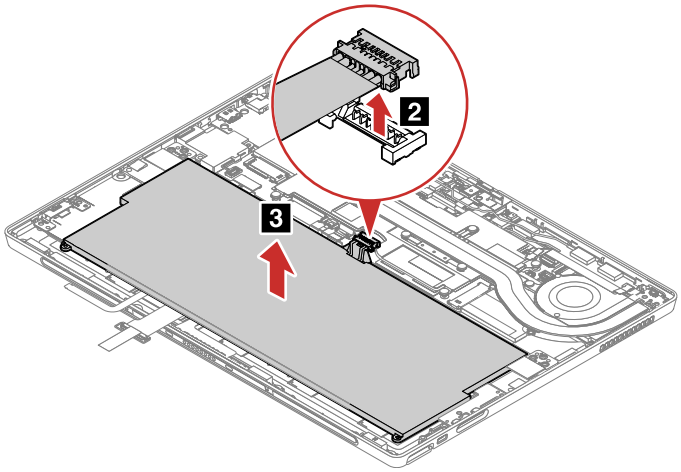

Note: After the built-in battery is removed or re-installed, Date/Time, power-on password and system management passwords are initialized. Press F1 to enter the ThinkPad Setup program to change Date/Time.

1030 Kickstand and hinges

For access, remove this FRU:

- “1010 LCD module” on page 57

Removal steps

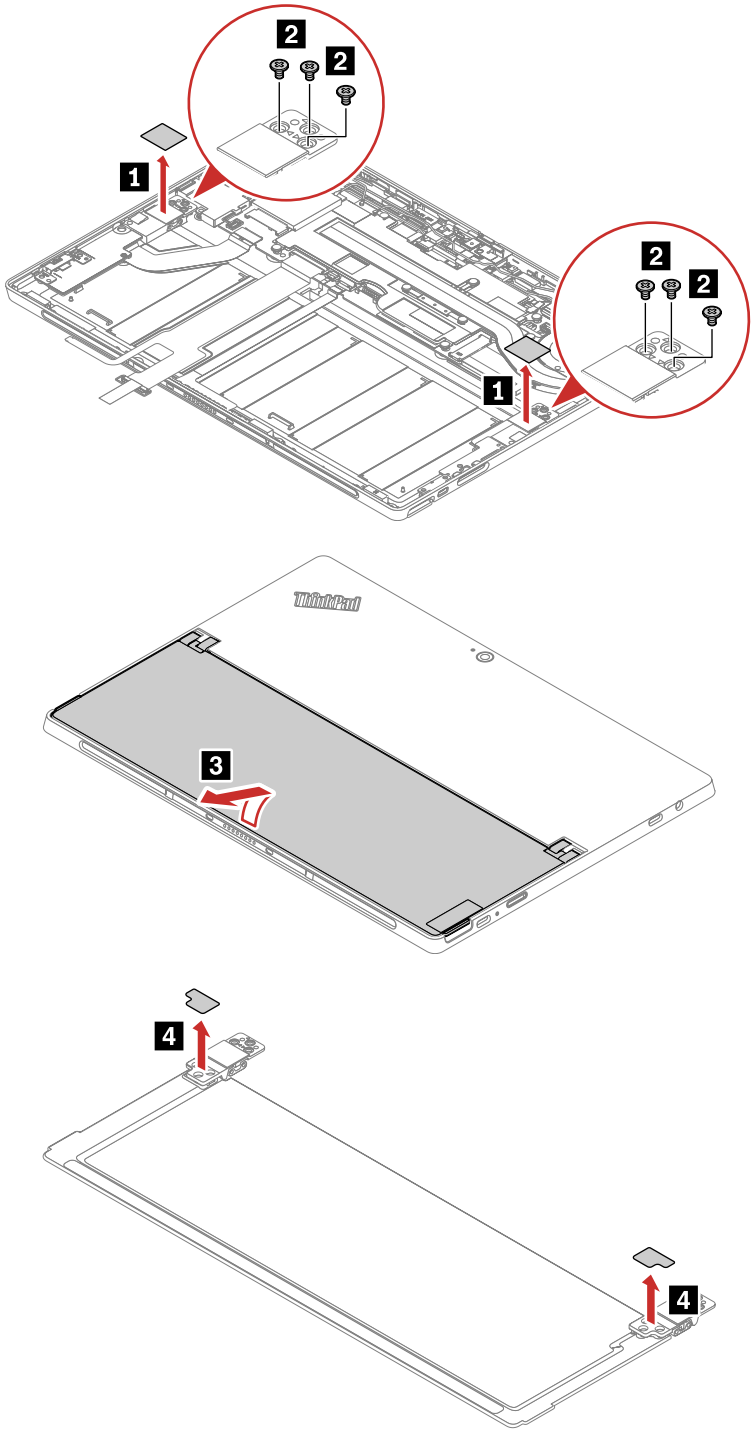

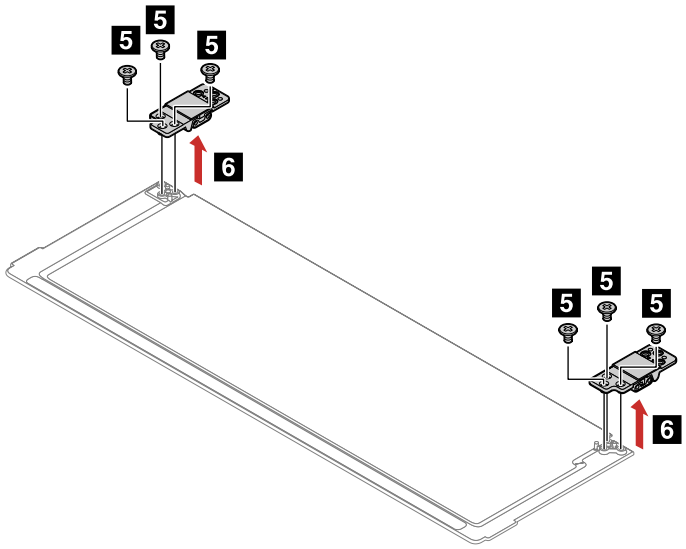

Step	Screw (quantity)	Color	Torque
2	M2 × L2.5 mm, flat-head, nylon-coated (6)	Black	0.181 Nm (1.85 kgf-cm)
5	M2 × L2.5 mm, flat-head, nylon-coated (6)	Black	0.181 Nm (1.85 kgf-cm)

1040 LCD cable

For access, remove these FRUs:
- “1010 LCD module” on page 57
- “1020 Built-in battery” on page 59

Removal steps

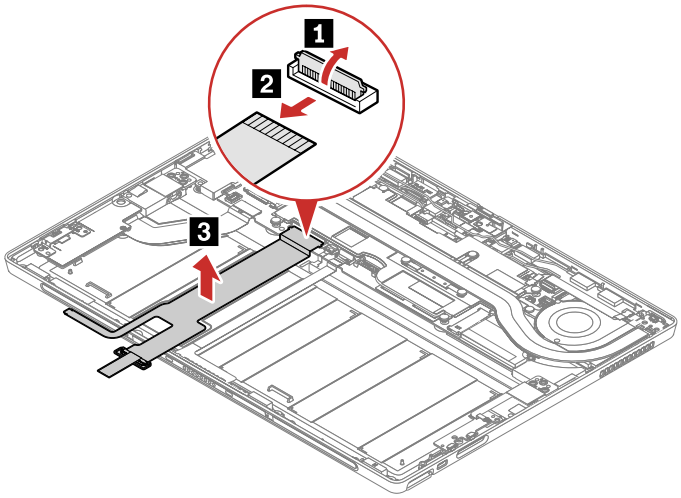

1050 Pogo pin cable

For access, remove these FRUs:
- “1010 LCD module” on page 57
- “1020 Built-in battery” on page 59

Removal steps

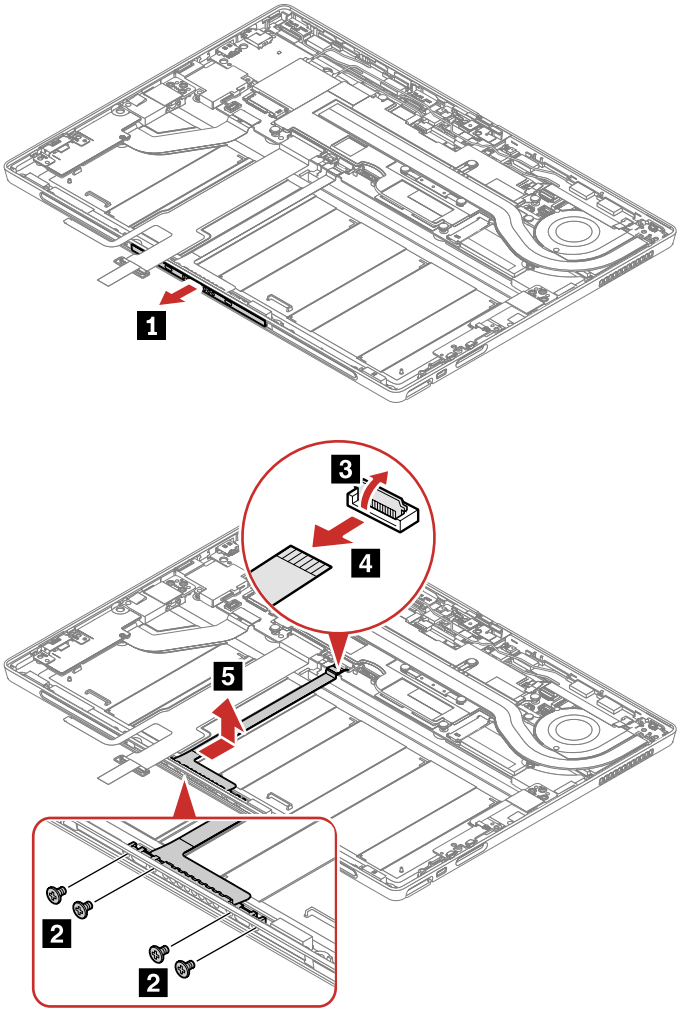

Step	Screw (quantity)	Color	Torque
2	M1.6 × L2.4 mm, flat-head, nylon-coated (4)	Silver	0.098 Nm (1.05 kgf-cm)

1060 Volume board and cable

For access, do the following :

1. Remove these FRUs:
   - “1010 LCD module” on page 57
   - “1020 Built-in battery” on page 59
2. Disconnect the pogo pin cable from the system board. See “1050 Pogo pin cable” on page 62.

Removal steps

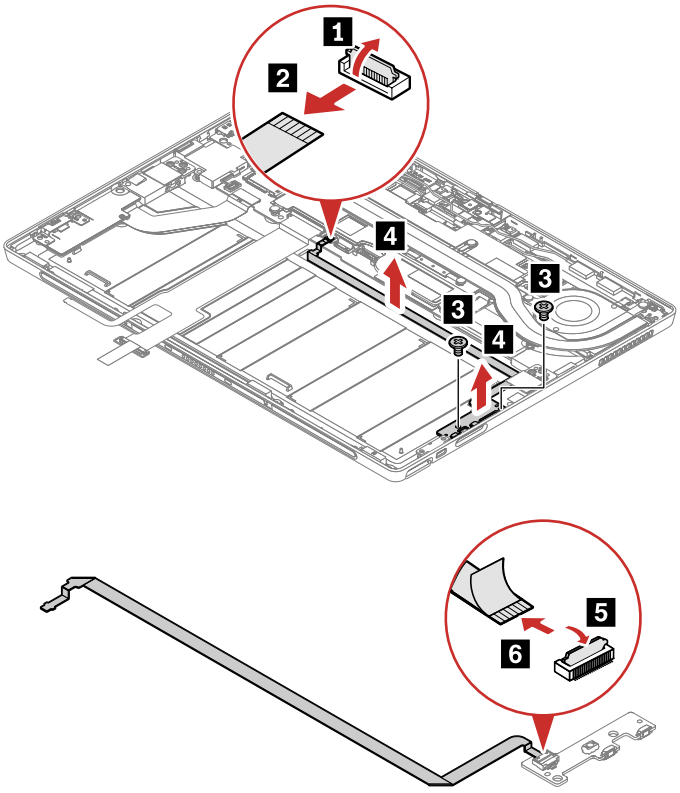

Step	Screw (quantity)	Color	Torque
3	M2 × L2.5 mm, flat-head, nylon-coated (2)	Black	0.181 Nm (1.85 kgf-cm)

1070 Hook holder for bezel

For access, do the following :

1. Remove these FRUs:
   - “1010 LCD module” on page 57
   - “1020 Built-in battery” on page 59
2. Disconnect the pogo pin cable from the system board. See “1050 Pogo pin cable” on page 62.
3. Remove the volume board and cable. See “1060 Volume board and cable” on page 63.

Removal steps

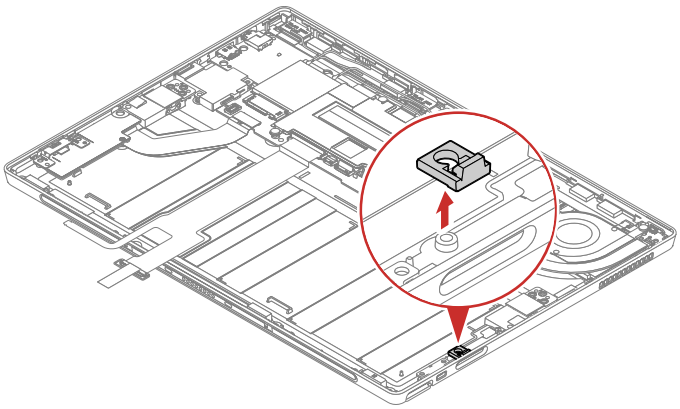

1080 Security-lock bracket

For access, remove this FRU:
- “1010 LCD module” on page 57

Removal steps

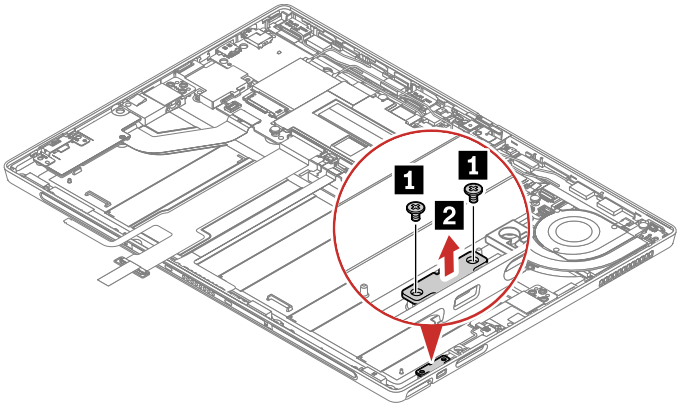

Step	Screw (quantity)	Color	Torque
1	M2 × L2.5 mm, flat-head, nylon-coated (2)	Black	0.181 Nm (1.85 kgf-cm)

1090 USB-C board bracket

For access, remove this FRU:
- “1010 LCD module” on page 57

Removal steps

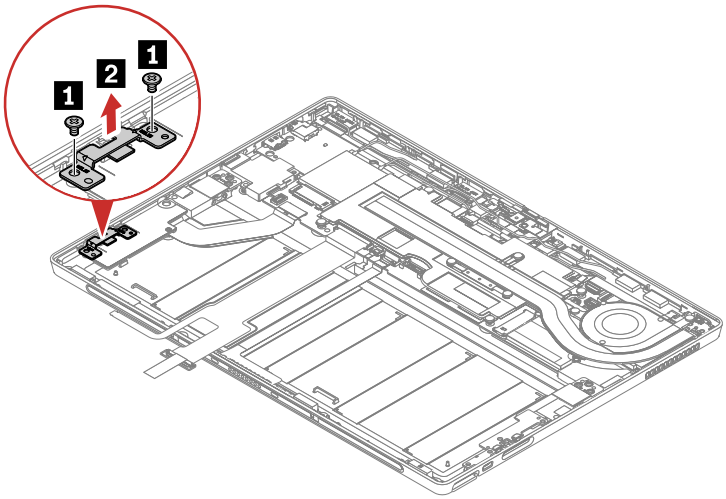

Step	Screw (quantity)	Color	Torque
1	M2 × L2.5 mm, flat-head, nylon-coated (2)	Black	0.181 Nm (1.85 kgf-cm)

1100 USB-C board and cable

For access, remove these FRUs:

- “1010 LCD module” on page 57
- “1020 Built-in battery” on page 59
- “1090 USB-C board bracket” on page 65

Removal steps

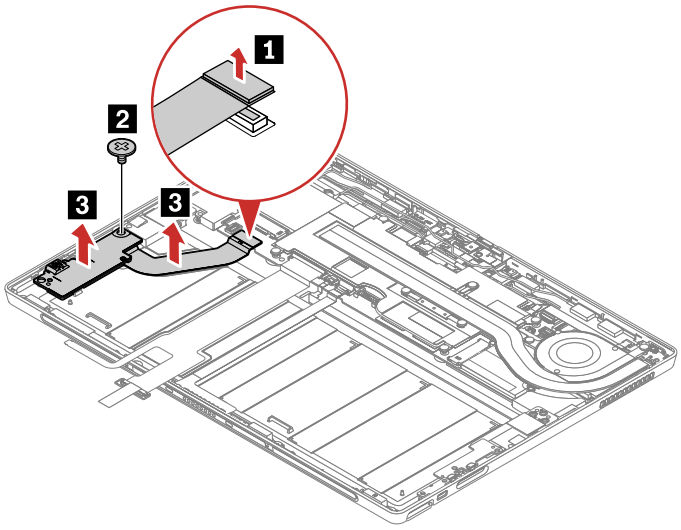

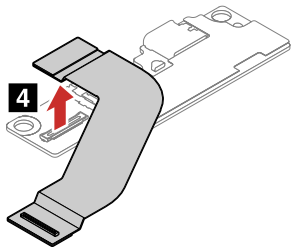

Step	Screw (quantity)	Color	Torque
2	M2 × L2.5 mm, flat-head, nylon-coated (1)	Black	0.181 Nm (1.85 kgf-cm)

1110 Thermal fan assembly

For access, remove this FRU:

- “1010 LCD module” on page 57

Removal steps

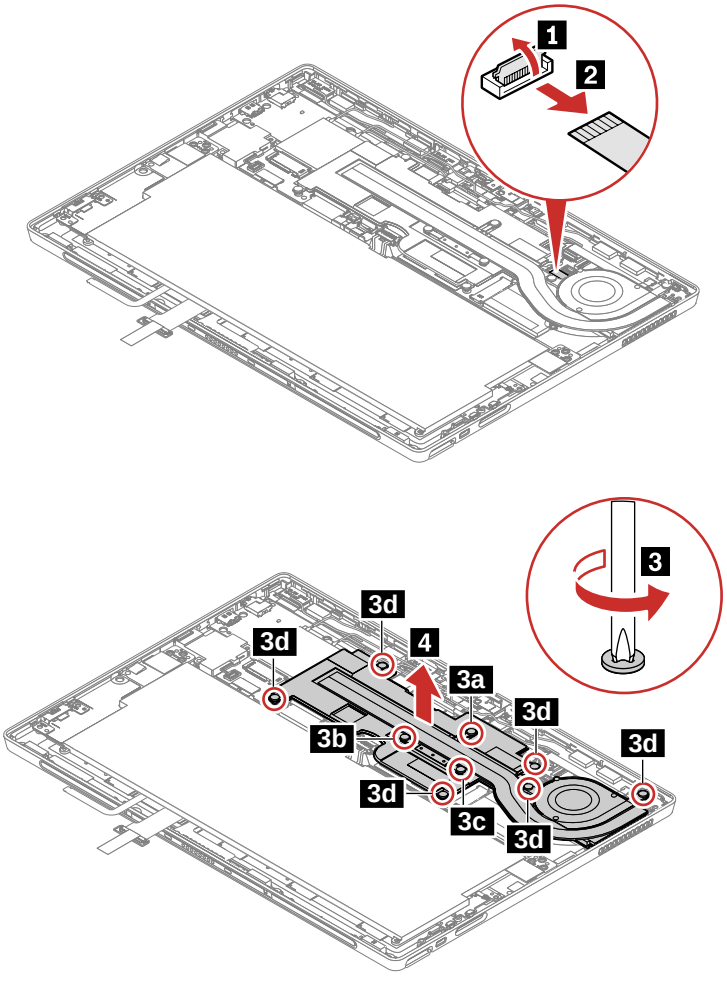

When installing:

- Ensure that the connector is attached firmly.

- Do not press the top of the fan cover and the fan hub.
- Before you attach the fan assembly to the computer, apply thermal grease, at an amount of 0.2 grams, on the part marked a as shown in the following illustrations. Too much or too little application of grease can cause a thermal problem due to imperfect contact with a component.

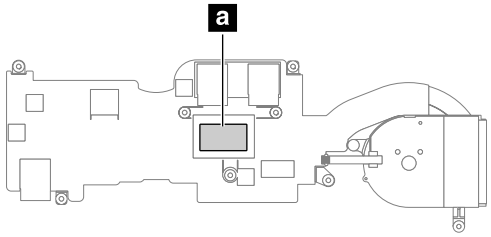

1120 P-sensor cable

For access, remove this FRU:
- “1010 LCD module” on page 57

Removal steps

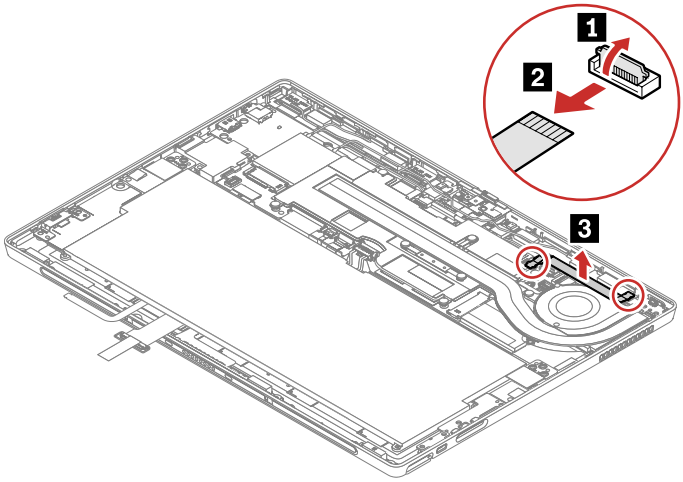

1130 M.2 solid-state drive

For access, remove these FRUs:
- “1010 LCD module” on page 57
- “1110 Thermal fan assembly” on page 67

Attention:

- Do not drop the drive or apply any physical shock to it. The drive is sensitive to physical shock. Improper handling can cause damage and permanent loss of data.
- Before removing the drive, have the user make a backup copy of all the information on it if possible.
- Never remove the drive while the system is operating or in sleep mode.

Removal steps

A Mylar film might cover the M.2 solid-state drive. To access the M.2 SSD, peel off the film first.

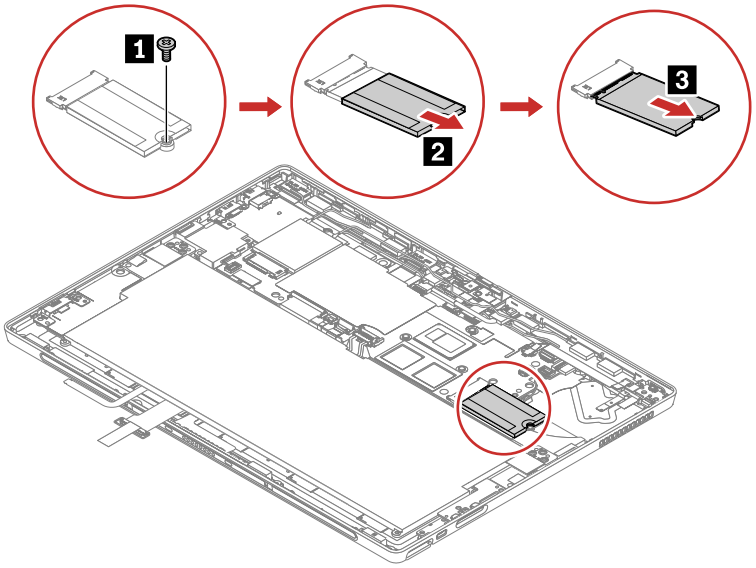

Step	Screw (quantity)	Color	Torque
1	M2 × L2.15 mm, flat-head, nylon-coated (1)	Silver	0.181 Nm (1.85 kgf-cm)

1140 Speakers

For access, remove these FRUs:
- “1010 LCD module” on page 57
- “1110 Thermal fan assembly” on page 67

Removal steps

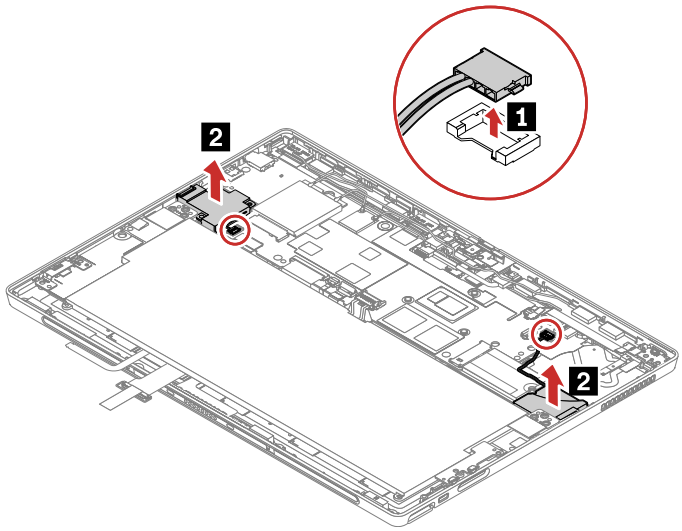

1150 Wireless-WAN card (for selected models)

For access, remove this FRU:
- “1010 LCD module” on page 57

Removal steps

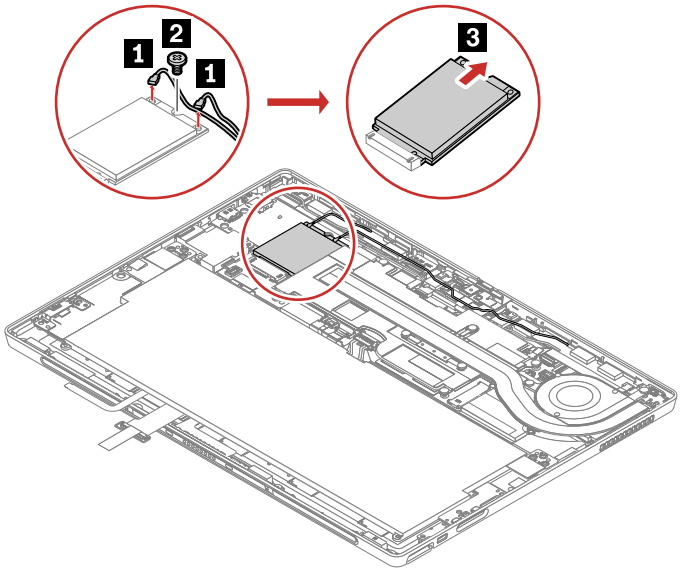

Step	Screw (quantity)	Color	Torque
2	M2 × L2 mm, flat-head, nylon-coated (1)	Silver	0.181 Nm (1.85 kgf-cm)

When installing: ensure that you connect the red cable to the main connector, and the blue cable to the auxiliary connector.

1160 Power board and cable

For access, remove these FRUs:
- “1010 LCD module” on page 57
- “1110 Thermal fan assembly” on page 67

Removal steps

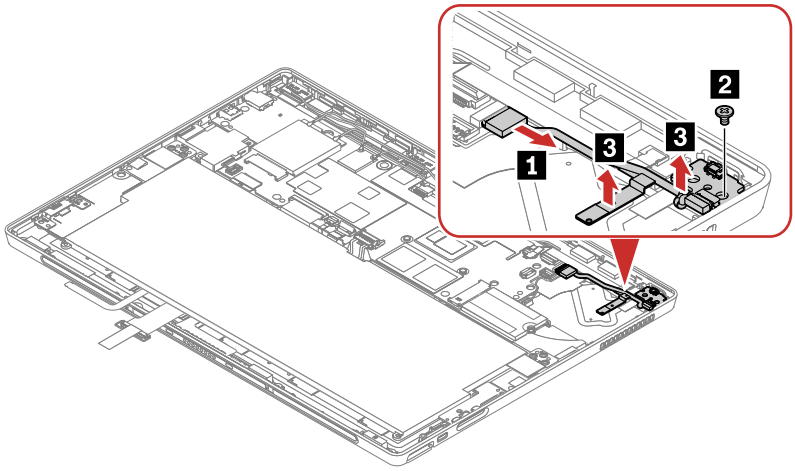

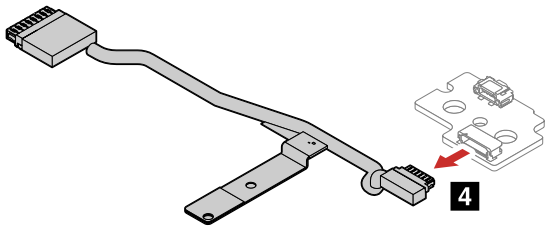

Step	Screw (quantity)	Color	Torque
2	M2 × L2.5 mm, flat-head, nylon-coated (1)	Black	0.181 Nm (1.85 kgf-cm)

1170 I/O bracket

For access, remove this FRU:
- “1010 LCD module” on page 57

Removal steps

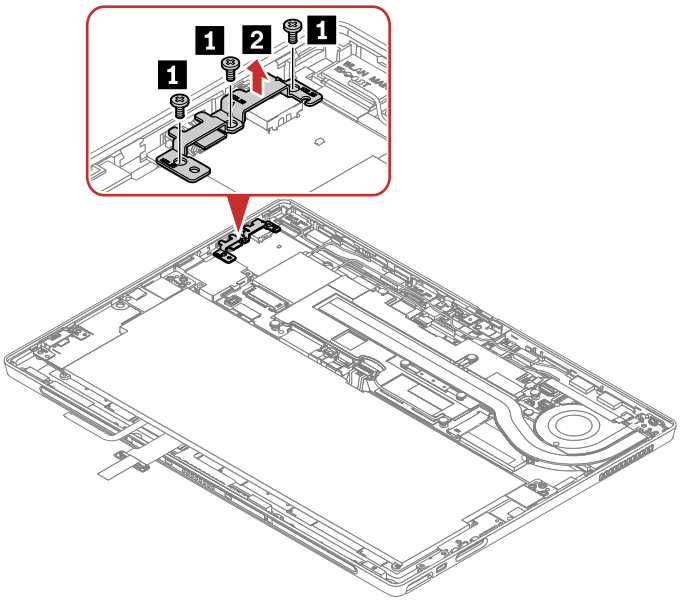

Step	Screw (quantity)	Color	Torque
1	M2 × L2.5 mm, flat-head, nylon-coated (3)	Black	0.181 Nm (1.85 kgf-cm)

1180 NFC module, NFC module cable, and NFC antenna (for selected models)

For access, remove this FRU:
- “1010 LCD module” on page 57

Removal steps

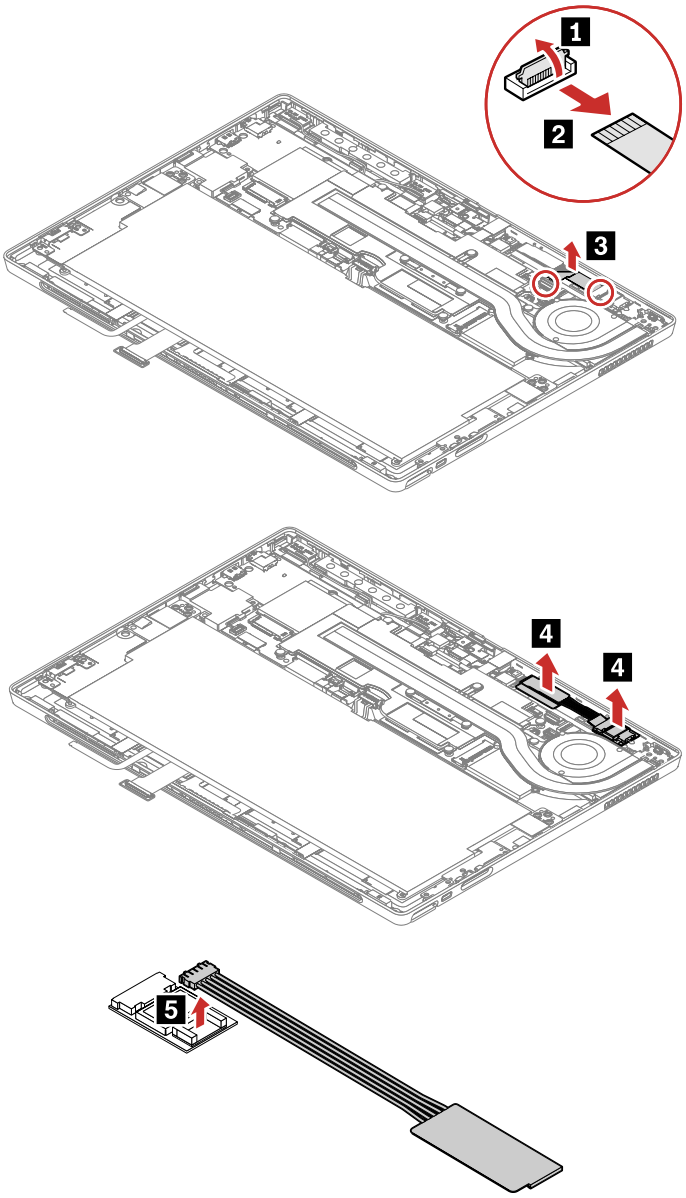

1190 Webcam privacy shutter

For access, remove this FRU:

- “1010 LCD module” on page 57

Removal steps

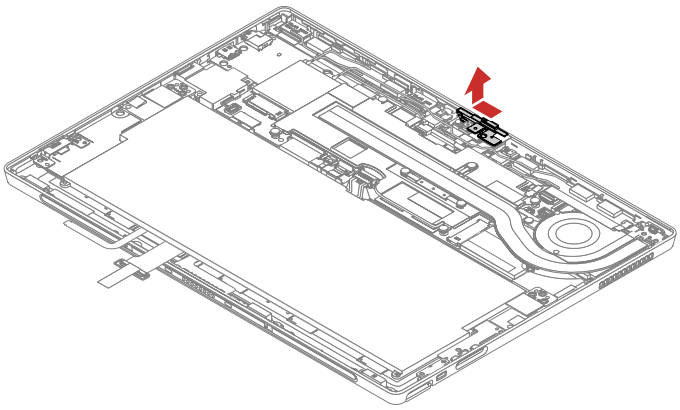

1200 Front camera module

For access, remove these FRUs:
- “1010 LCD module” on page 57
- “1190 Webcam privacy shutter” on page 72

Removal steps

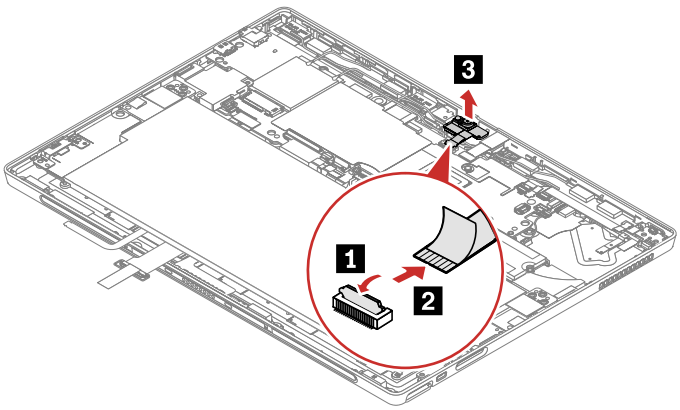

1210 Rear camera

For access, remove these FRUs:
- “1010 LCD module” on page 57
- “1110 Thermal fan assembly” on page 67
- “1190 Webcam privacy shutter” on page 72

Removal steps

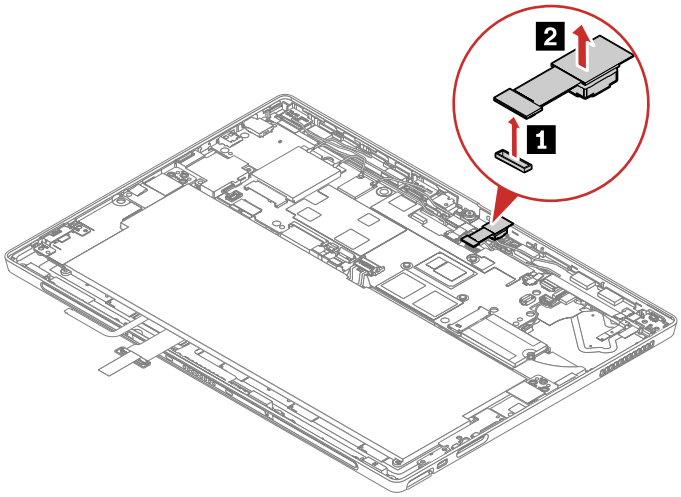

1220 Microphone assembly

For access, remove these FRUs:

- “1010 LCD module” on page 57
- “1110 Thermal fan assembly” on page 67
- “1190 Webcam privacy shutter” on page 72
- “1200 Front camera module” on page 73
- “1210 Rear camera” on page 73

Removal steps

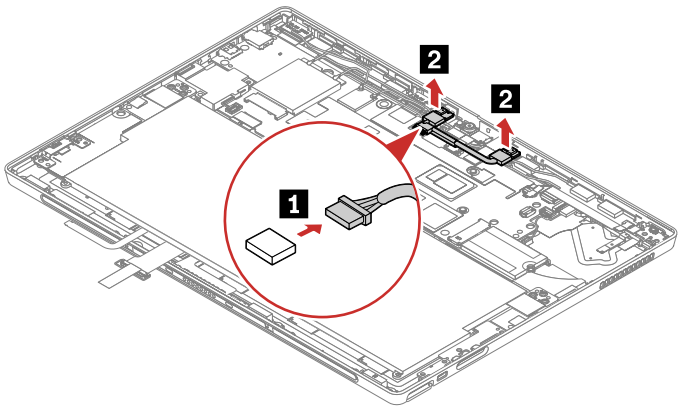

1230 Front camera bracket

For access, remove these FRUs:

- “1010 LCD module” on page 57
- “1110 Thermal fan assembly” on page 67
- “1190 Webcam privacy shutter” on page 72
- “1200 Front camera module” on page 73
- “1210 Rear camera” on page 73
- “1220 Microphone assembly” on page 74

Removal step

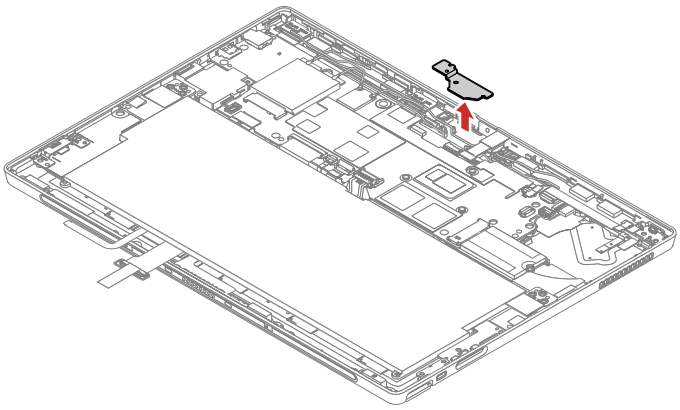

1240 System board

Important notices for handling the system board

When handling the system board, read the following:

- The system board has an accelerometer, which can be broken when several thousands of G-forces are applied.
- Be careful not to drop the system board on a bench top that has a hard surface, such as metal, wood, or composite.
- Avoid rough handling of any kind.
- At every point in the process, be sure not to drop or stack the system board.
- If you put a system board down, be sure to put it only on a padded surface such as an ESD mat or a corrugated conductive material.

Attention: The microprocessor a soldered on the system board is extremely sensitive. When you service the system board, avoid any kind of rough handling.

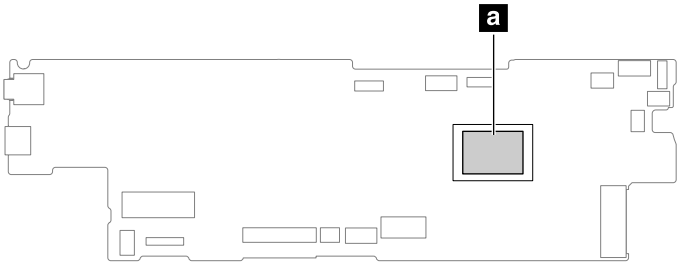

For access, remove these FRUs:

- “1010 LCD module” on page 57
- “1110 Thermal fan assembly” on page 67
- “1150 Wireless-WAN card (for selected models)” on page 69
- “1130 M.2 solid-state drive” on page 68
- “1180 NFC module, NFC module cable, and NFC antenna (for selected models)” on page 71
- “1170 I/O bracket” on page 71

Removal steps

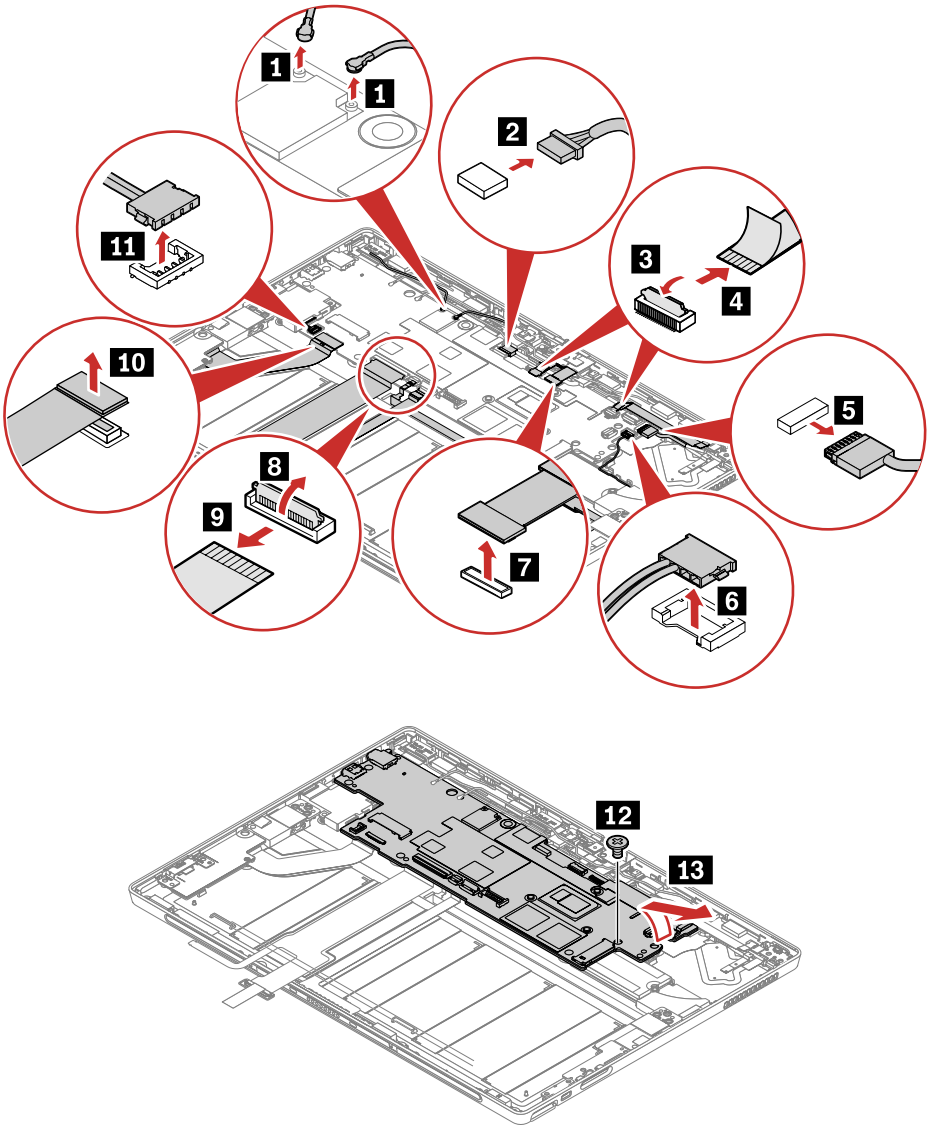

Step	Screw (quantity)	Color	Torque
12	M2 × L2 mm, big-head, nylon-coated (1)	Black	0.181 Nm (1.85 kgf-cm)

1250 Wireless-LAN antenna assembly

For access, remove these FRUs:

- “1010 LCD module” on page 57
- “1110 Thermal fan assembly” on page 67
- “1150 Wireless-WAN card (for selected models)” on page 69
- “1130 M.2 solid-state drive” on page 68
- “1180 NFC module, NFC module cable, and NFC antenna (for selected models)” on page 71
- “1170 I/O bracket” on page 71
- “1240 System board” on page 75

Removal steps

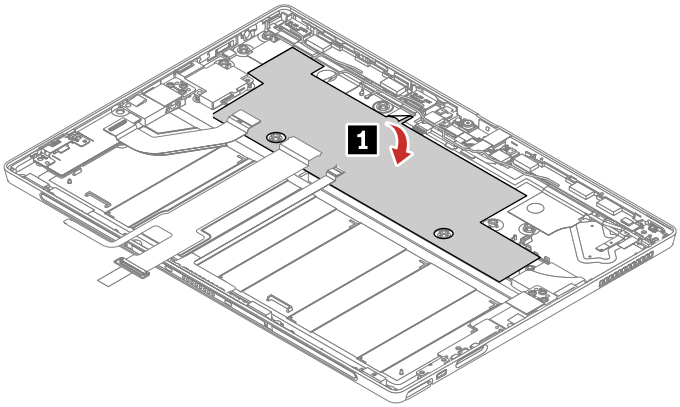

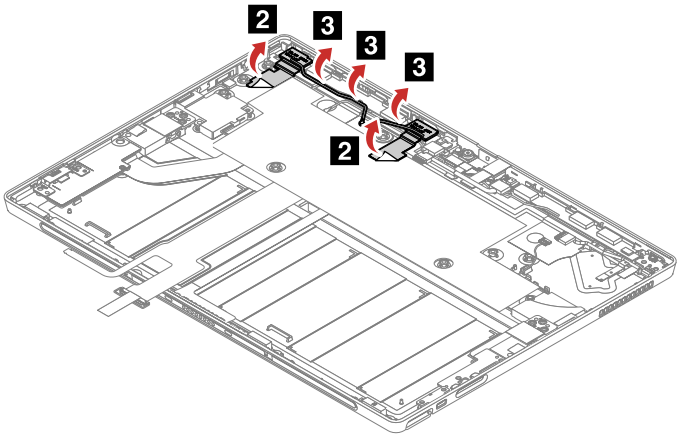

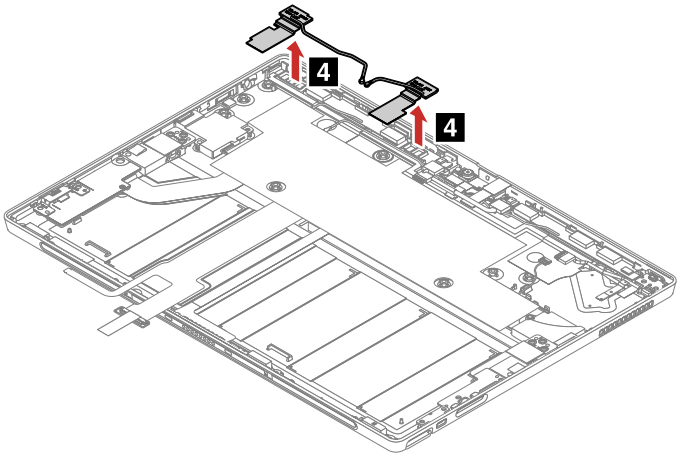

Attention: When you route the cables, ensure that they are not subject to any tension. Tension could cause the cables to be damaged by the cable guides, or a wire to be broken.

Antenna locations

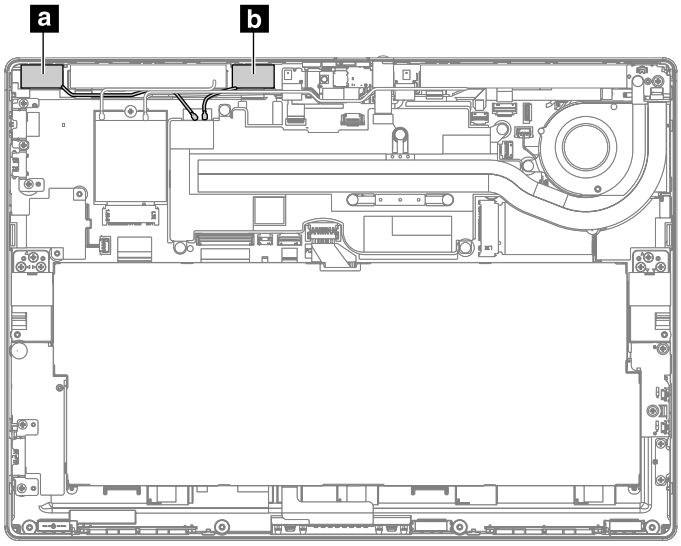

a Wireless-LAN antenna (main)
b Wireless-LAN antenna (auxiliary)

When installing: plug the gray cable into the main connector and the white cable into the auxiliary connector.

1260 Wireless-WAN antenna assembly (for selected models)

Removal steps

For access, remove these FRUs:

- “1010 LCD module” on page 57
- “1110 Thermal fan assembly” on page 67
- “1150 Wireless-WAN card (for selected models)” on page 69
- “1130 M.2 solid-state drive” on page 68
- “1180 NFC module, NFC module cable, and NFC antenna (for selected models)” on page 71
- “1120 P-sensor cable” on page 68
- “1170 I/O bracket” on page 71
- “1240 System board” on page 75

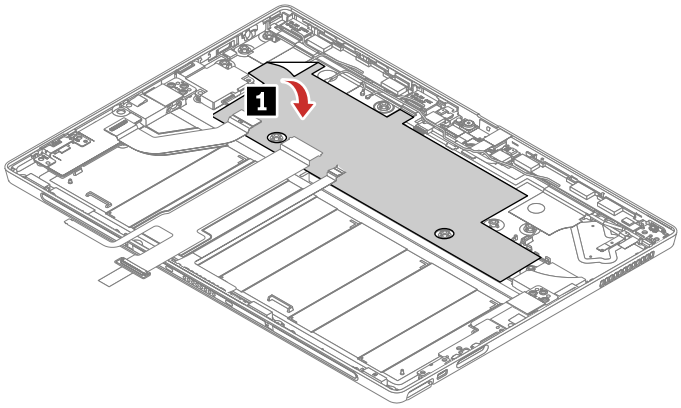

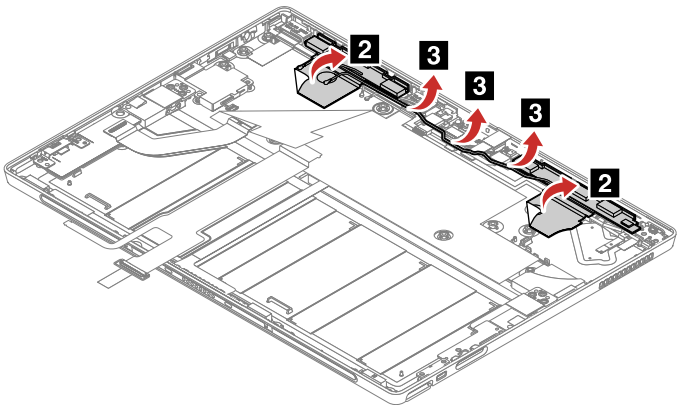

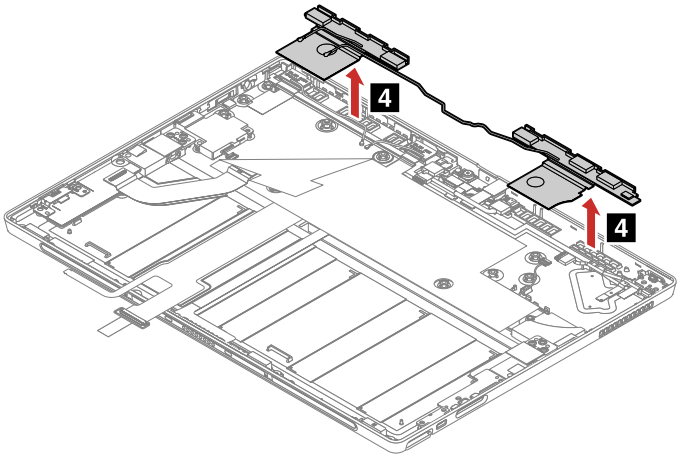

Attention: When you route the cables, ensure that they are not subject to any tension. Tension could cause the cables to be damaged by the cable guides, or a wire to be broken.

When installing: ensure that you connect the red cable to the main connector, and the blue cable to the auxiliary connector.

Antenna locations

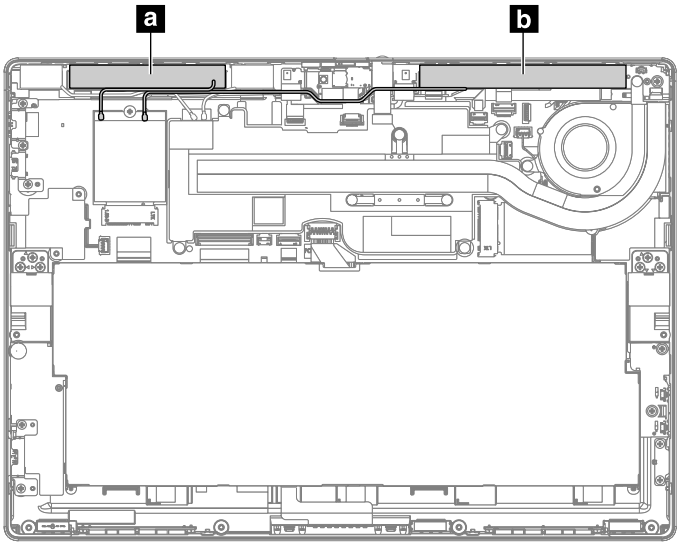

a Wireless WAN antenna (auxiliary)*
b Wireless WAN antenna (main)*

* for selected models

Appendix A. Notices

Lenovo may not offer the products, services, or features discussed in this document in all countries. Consult your local Lenovo representative for information on the products and services currently available in your area. Any reference to a Lenovo product, program, or service is not intended to state or imply that only that Lenovo product, program, or service may be used. Any functionally equivalent product, program, or service that does not infringe any Lenovo intellectual property right may be used instead. However, it is the user's responsibility to evaluate and verify the operation of any other product, program, or service.

Lenovo may have patents or pending patent applications covering subject matter described in this document. The furnishing of this document does not give you any license to these patents. You can send license inquiries, in writing, to:

Lenovo (United States), Inc.
8001 Development Drive
Morrisville, NC 27560
U.S.A.
Attention: Lenovo Director of Licensing

LENOVO PROVIDES THIS PUBLICATION "AS IS" WITHOUT WARRANTY OF ANY KIND, EITHER EXPRESS OR IMPLIED, INCLUDING, BUT NOT LIMITED TO, THE IMPLIED WARRANTIES OF NON-INFRINGEMENT, MERCHANTABILITY OR FITNESS FOR A PARTICULAR PURPOSE. Some jurisdictions do not allow disclaimer of express or implied warranties in certain transactions, therefore, this statement may not apply to you.

This information could include technical inaccuracies or typographical errors. Changes are periodically made to the information herein; these changes will be incorporated in new editions of the publication. Lenovo may make improvements and/or changes in the product(s) and/or the program(s) described in this publication at any time without notice.

The products described in this document are not intended for use in implantation or other life support applications where malfunction may result in injury or death to persons. The information contained in this document does not affect or change Lenovo product specifications or warranties. Nothing in this document shall operate as an express or implied license or indemnity under the intellectual property rights of Lenovo or third parties. All information contained in this document was obtained in specific environments and is presented as an illustration. The result obtained in other operating environments may vary.

Lenovo may use or distribute any of the information you supply in any way it believes appropriate without incurring any obligation to you.

Any references in this publication to non-Lenovo Web sites are provided for convenience only and do not in any manner serve as an endorsement of those Web sites. The materials at those Web sites are not part of the materials for this Lenovo product, and use of those Web sites is at your own risk.

Any performance data contained herein was determined in a controlled environment. Therefore, the result obtained in other operating environments may vary significantly. Some measurements may have been made on development-level systems and there is no guarantee that these measurements will be the same on generally available systems. Furthermore, some measurements may have been estimated through extrapolation. Actual results may vary. Users of this document should verify the applicable data for their specific environment.

© Copyright Lenovo 2021

Trademarks

LENOVO, LENOVO logo, THINKPAD, THINKPAD logo and TRACKPOINT are trademarks of Lenovo. Microsoft and Windows are trademarks of the Microsoft group of companies. USB-C® is a registered trademark of USB Implementers Forum. All other trademarks are the property of their respective owners. © 2021 Lenovo



Part Number: SP40T80021_01

Printed in

(1P) P/N: SP40T80021_01

