

DB3270T-B

User manual

DESK MOUNT FOR SCREENS

VESA: 75x75, 100x100, 100x150, 100x200, 150x100, 150x150, 200x100, 200x200, 300x200, 300x300, 400x200, 400x300, 400x400, 600x400, 800x400

32”-70” | 50kg

Content

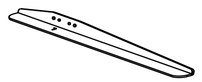

A (x1)

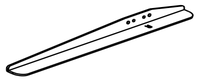

B (x1)



C (x1)



D (x1)

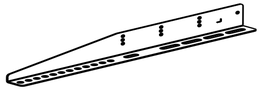

E (x1)

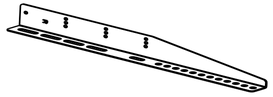

F (x1)



G (x4)



H (x8)



I (x1)



M-A (x4)
M5x14



M-B (x4)
M6x14



M-C (x4)
M6x25



M-D (x4)
M8x25



M-E (x4)
M8x45



M-F (x4)



M-G (x4)
Ø15x Ø8x5



M-H (x4)
Ø15x Ø8x15

Necessary tools

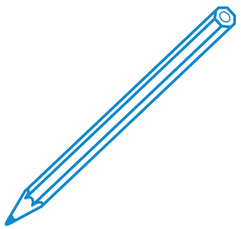

Pencil

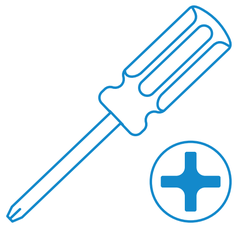

Screwdriver

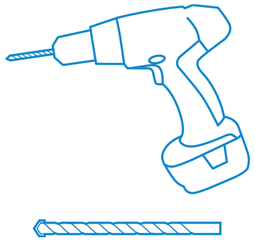

Drill

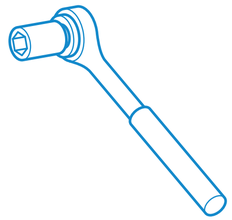

Ratchet wrench

*Required tools (not included)

Before starting installation

- Read the user manual, if you have any questions regarding instructions or warnings, please contact your local distributor.
- Ensure that you have received all parts according to the component checklist prior to installation. If any parts are missing or faulty, telephone your local distributor for a replacement.



- Use with products heavier than the rated weights indicated may result in instability causing possible injury.
- Mounts must be attached as specified in assembly instructions. Improper installation may result in damage or serious personal injury.
- Safety gear and proper tools must be used. This products should only be installed by professionals.
- This product is designed to be installed on wood stud walls, solid concrete walls or brick walls.
- Make sure that the supporting surface will safely support the combined weight of the equipment and all attached hardware and components.
- Use the mounting screws provided and DO NOT OVER-TIGHTEN.
- This product contains small items that could be a choking hazard if swallowed. Keep these items away from children.
- This product is intended for indoor use only. Using this product outdoors could lead to product failure and personal injury.
- Please refer to the product warranty here.

Installation

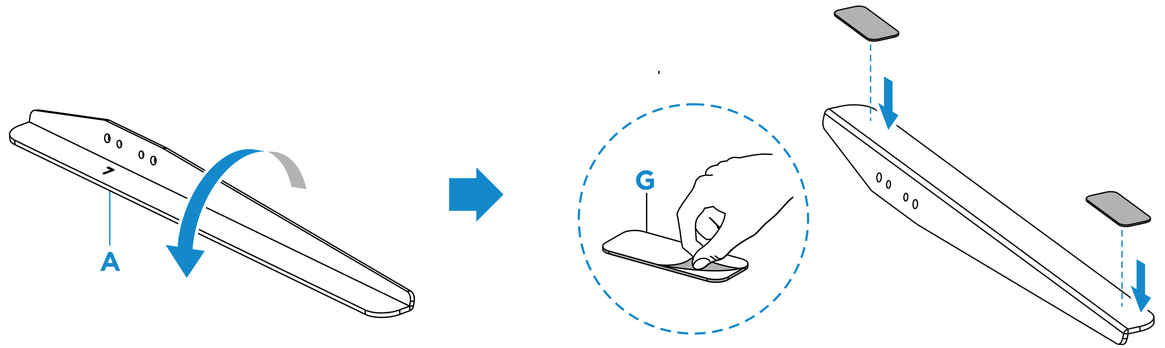

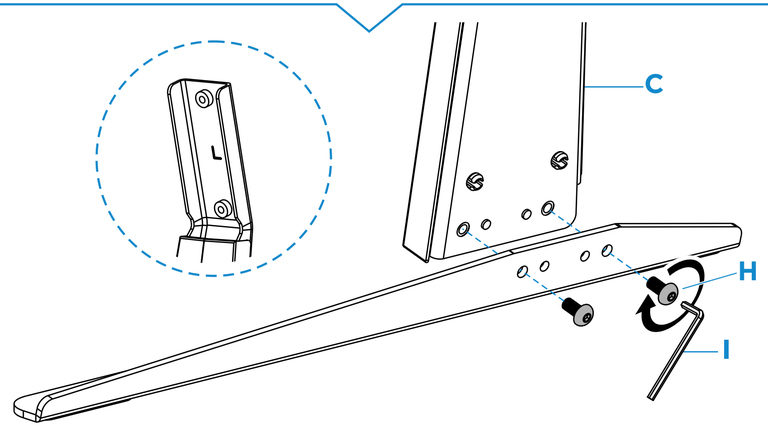

1

Installation

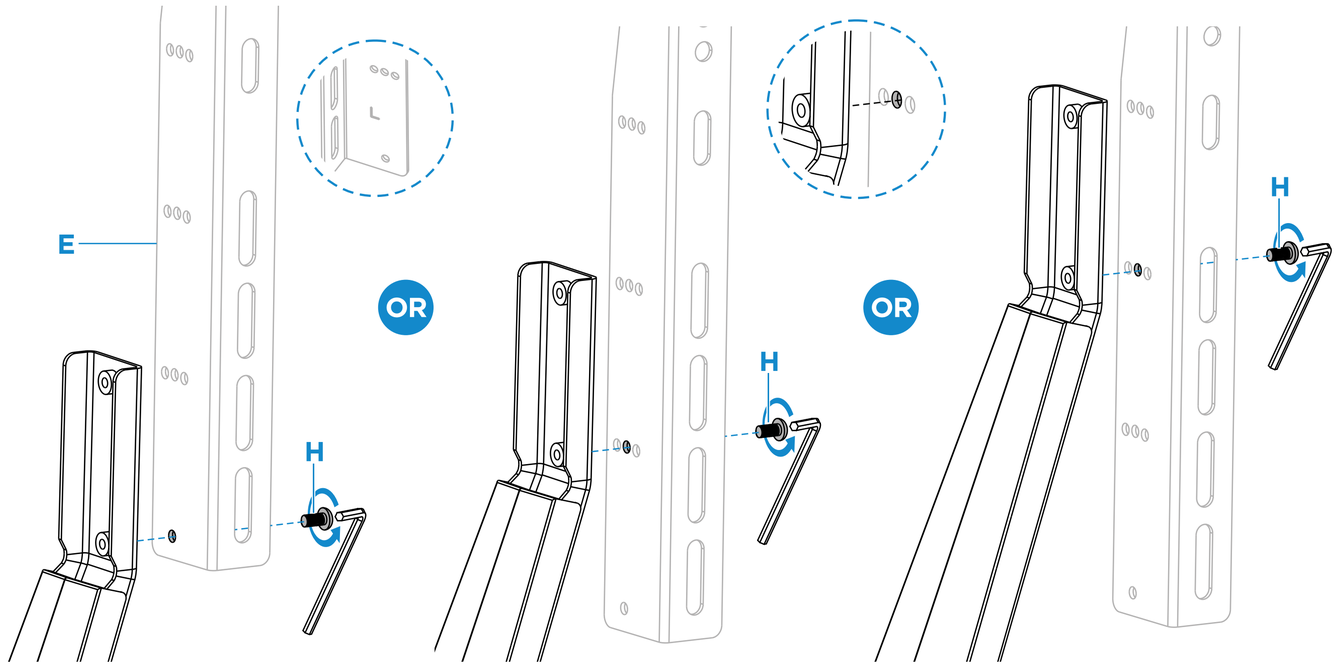

2

Installation

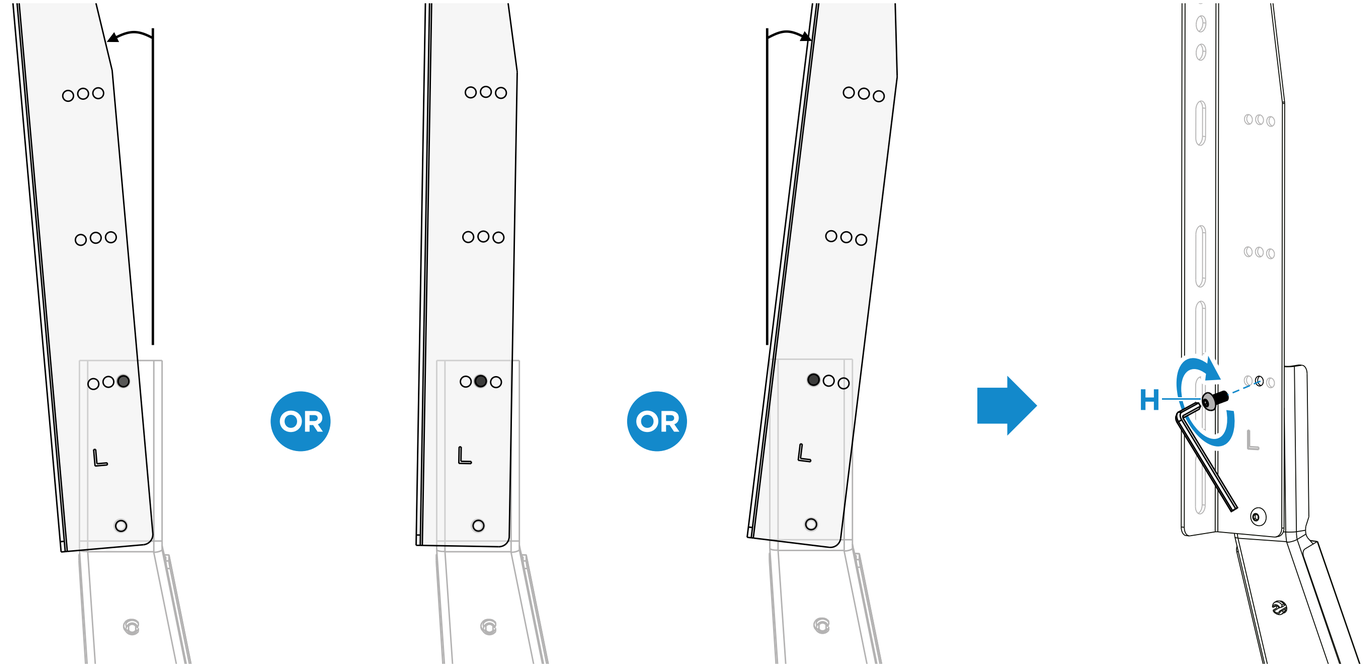

3

Installation

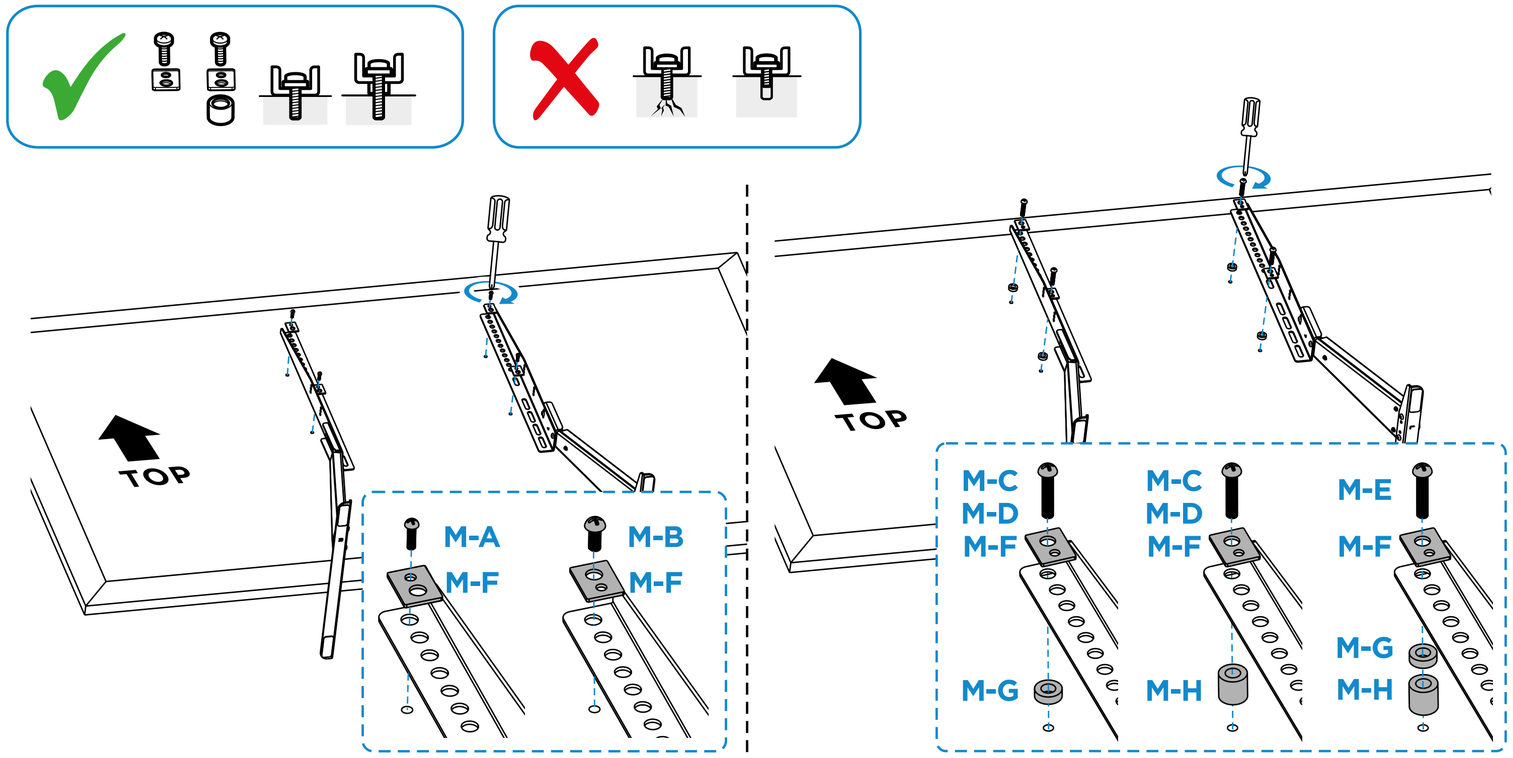

4

Installation

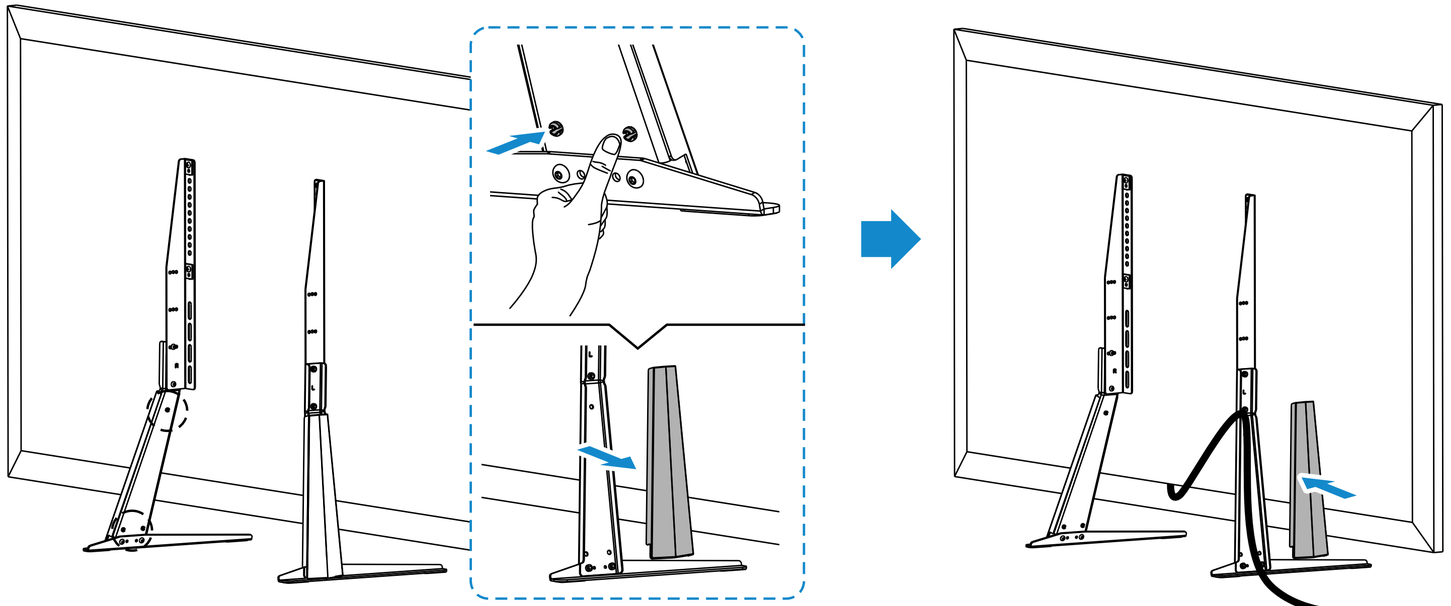

Keep up with the latest news!

Follow us on social networks





©2021 by TooQ Technology, S.L.
All Rights Reserved.
tooq.com