Galaxy VX

UPS with 1500 kW I/O Cabinet

Installation

380 V, 400 V, 415 V, 440 V, and 480 V

1100 kW/kVA and 1100 kW/kVA N+1
500 kW/kVA, 750 kW/kVA, and 1000 kW/kVA Expandable to 1250 kW/kVA, 1250 kW/kVA, 1250 kW/kVA, 1250 kW/kVA N+1
500 kW/kVA, 750 kW/kVA, 1000 kW/kVA, and 1250 kW/kVA Expandable to 1500 kW/kVA, 1500 kW/kVA, 1500 kW/kVA N+1

01/2021



www.schneider-electric.com

Legal Information

The Schneider Electric brand and any trademarks of Schneider Electric SE and its subsidiaries referred to in this guide are the property of Schneider Electric SE or its subsidiaries. All other brands may be trademarks of their respective owners.

This guide and its content are protected under applicable copyright laws and furnished for informational use only. No part of this guide may be reproduced or transmitted in any form or by any means (electronic, mechanical, photocopying, recording, or otherwise), for any purpose, without the prior written permission of Schneider Electric.

Schneider Electric does not grant any right or license for commercial use of the guide or its content, except for a non-exclusive and personal license to consult it on an "as is" basis. Schneider Electric products and equipment should be installed, operated, serviced, and maintained only by qualified personnel.

As standards, specifications, and designs change from time to time, information contained in this guide may be subject to change without notice.

To the extent permitted by applicable law, no responsibility or liability is assumed by Schneider Electric and its subsidiaries for any errors or omissions in the informational content of this material or consequences arising out of or resulting from the use of the information contained herein.

IEC **UL**

Go to
IEC: https://www.productinfo.schneider-electric.com/galaxyvx_iec/ or
UL: https://www.productinfo.schneider-electric.com/galaxyvx_ul/
or scan the QR code above for digital experience and translated manuals.

Table of Contents

Important Safety Instructions — SAVE THESE INSTRUCTIONS 5
FCC Statement 6
Electromagnetic Compatibility 6
Safety Precautions 6
Electrical Safety 8
Battery Safety 9
Specifications 11
Overview of Configurations 11
Overview of UPSs with 1500 kW I/O Cabinet – Single Utility/Mains 11
Overview of UPSs with 1500 kW I/O Cabinet – Dual Utility/Mains 12
Specifications for 500 kW UPS 13
Specifications for 750 kW UPS 15
Specifications for 1000 kW UPS 17
Specifications for 1100 kW UPS 19
Specifications for 1250 kW UPS 21
Specifications for 1500 kW UPS 23
Recommended Upstream Protection and Cable Sizes – IEC 24
Recommended Upstream Protection and Cable Sizes – UL 25
Recommended Upstream Protection and Cable Sizes for 1500 kW UPS 26
Recommended Bolt and Lug Sizes for Copper Cables 26
Recommended Bolt and Lug Sizes for Aluminium Cables 26
Torque Specifications 27
Environment 27
Heat Dissipation (BTU/hr) for UPSs with 1500 kW I/O Cabinet 27
Weights and Dimensions for UPSs with 1500 kW I/O Cabinet 30
Clearance for UPSs with 1500 kW I/O Cabinet 30
Guidance for Organizing Battery Cables 30
Overview of Supplied Installation Kits 32
Installation Kits Shipped with the I/O Cabinet 32
Installation Kits Shipped with the Power Cabinet 35
Installation Procedure 37
Mechanical Installation 38
Remove the Cabinets from the Pallet 38
Mount the Rear Anchoring Brackets 42
Position the Cabinets 44
Connect the Power Cables 54
Prepare the I/O Cabinet for Power Cables in Top Cable Entry Systems 54
Prepare the I/O Cabinet for Power Cables in Bottom Cable Entry Systems 55
Install the Single Utility/Mains Installation Kit 0H-9161 56
Connect the Power Cables in a 380 V, 400 V, 415, and 440 V System 57
Connect the Power Cables in a 480 V System 59

Mount the Front Anchoring Brackets 60
Signal Cables 62
Route the Signal Cables between the I/O Cabinet and the Power Cabinets 62
Prepare for External Signal Cables 65
Signal Cable Connections to the Switchgear (Boards 0P6547, 0P6548, 0P6549) 69
Signal Cable Connections to Classic Battery Cabinets (Boards 0P6547, 0P6549, 0P6552) 70
Signal Cable Connections to Battery Breaker Cabinet (Boards 0P6547, 0P6548, 0P6549) 72
Connect the Emergency Power Off (EPO) 72
Connect External Synchronization 72
Signal Cable Connections for Basic UPS Synchronization to a Fixed Voltage Source (Boards 0P6548, 0P6549) 73
Signal Cable Connections for Dual UPS Synchronization with a Floating Synchronization Master (Boards 0P6548, 0P6549) 74
Signal Cable Connections for Fixed Parallel Synchronization Master (Boards 0P6548, 0P6549) 75
Connect Equipment to Input Contacts and Output Relays 75
Overview of Input Contacts and Output Relays 75
Route the PBUS Cables between Parallel UPS Units 77
External Communication 78
Connect the Modbus Cables 79
Final Mechanical Assembly 82
Final Mechanical Assembly of the I/O Cabinet 82
Final Mechanical Assembly of the Power Cabinets 85

Important Safety Instructions — SAVE THESE INSTRUCTIONS

Read these instructions carefully and look at the equipment to become familiar with it before trying to install, operate, service or maintain it. The following safety messages may appear throughout this manual or on the equipment to warn of potential hazards or to call attention to information that clarifies or simplifies a procedure.



The addition of this symbol to a “Danger” or “Warning” safety message indicates that an electrical hazard exists which will result in personal injury if the instructions are not followed.



This is the safety alert symbol. It is used to alert you to potential personal injury hazards. Obey all safety messages with this symbol to avoid possible injury or death.

⚠ DANGER

DANGER indicates a hazardous situation which, if not avoided, **will result in** death or serious injury.

Failure to follow these instructions will result in death or serious injury.

⚠ WARNING

WARNING indicates a hazardous situation which, if not avoided, **could result in** death or serious injury.

Failure to follow these instructions can result in death, serious injury, or equipment damage.

⚠ CAUTION

CAUTION indicates a hazardous situation which, if not avoided, **could result in** minor or moderate injury.

Failure to follow these instructions can result in injury or equipment damage.

NOTICE

NOTICE is used to address practices not related to physical injury. The safety alert symbol shall not be used with this type of safety message.

Failure to follow these instructions can result in equipment damage.

Please Note

Electrical equipment should only be installed, operated, serviced, and maintained by qualified personnel. No responsibility is assumed by Schneider Electric for any consequences arising out of the use of this material.

A qualified person is one who has skills and knowledge related to the construction, installation, and operation of electrical equipment and has received safety training to recognize and avoid the hazards involved.

FCC Statement

NOTE: This equipment has been tested and found to comply with the limits for a Class A digital device, pursuant to Part 15 of the FCC Rules. These limits are designed to provide reasonable protection against harmful interference when the equipment is operated in a commercial environment. This equipment generates, uses, and can radiate radio frequency energy and, if not installed and used in accordance with the instruction manual, may cause harmful interference to radio communications. Operation of this equipment in a residential area is likely to cause harmful interference in which case the user will be required to correct the interference at his own expense.

Any changes or modifications not expressly approved by the party responsible for compliance could void the user's authority to operate the equipment.

Electromagnetic Compatibility

NOTICE

RISK OF ELECTROMAGNETIC DISTURBANCE

This is a product Category C3 according to IEC 62040-2. This is a product for commercial and industrial applications in the second environment - installation restrictions or additional measures may be needed to prevent disturbances. The second environment includes all commercial, light industry, and industrial locations other than residential, commercial, and light industrial premises directly connected without intermediate transformer to a public low-voltage mains supply. The installation and cabling must follow the electromagnetic compatibility rules, e.g.:

- the segregation of cables,
- the use of shielded or special cables when relevant,
- the use of grounded metallic cable tray and supports.

Failure to follow these instructions can result in equipment damage.

Safety Precautions

⚠DANGER

HAZARD OF ELECTRIC SHOCK, EXPLOSION, OR ARC FLASH

All safety instructions in this document must be read, understood and followed.

Failure to follow these instructions will result in death or serious injury.

⚠DANGER

HAZARD OF ELECTRIC SHOCK, EXPLOSION, OR ARC FLASH

Read all instructions in the Installation Manual before installing or working on this UPS system.

Failure to follow these instructions will result in death or serious injury.

⚠ DANGER

HAZARD OF ELECTRIC SHOCK, EXPLOSION, OR ARC FLASH

Do not install the UPS system until all construction work has been completed and the installation room has been cleaned.

Failure to follow these instructions will result in death or serious injury.

⚠ DANGER

HAZARD OF ELECTRIC SHOCK, EXPLOSION, OR ARC FLASH

- The product must be installed according to the specifications and requirements as defined by Schneider Electric. It concerns in particular the external and internal protections (upstream breakers, battery breakers, cabling, etc.) and environmental requirements. No responsibility is assumed by Schneider Electric if these requirements are not respected.
- After the UPS system has been electrically wired, do not start up the system. Start-up must only be performed by Schneider Electric.

Failure to follow these instructions will result in death or serious injury.

⚠ DANGER

HAZARD OF ELECTRIC SHOCK, EXPLOSION, OR ARC FLASH

The UPS system must be installed according to local and national regulations. Install the UPS according to:

- IEC 60364 (including 60364–4–41- protection against electric shock, 60364–4–42 - protection against thermal effect, and 60364–4–43 - protection against overcurrent), **or**
- NEC NFPA 70, **or**
- Canadian Electrical Code (C22.1, Part 1)

depending on which one of the standards apply in your local area.

Failure to follow these instructions will result in death or serious injury.

⚠ DANGER

HAZARD OF ELECTRIC SHOCK, EXPLOSION, OR ARC FLASH

- Install the UPS system in a temperature controlled indoor environment free of conductive contaminants and humidity.
- Install the UPS system on a non-flammable, level and solid surface (e.g. concrete) that can support the weight of the system.

Failure to follow these instructions will result in death or serious injury.

⚠ DANGER

HAZARD OF ELECTRIC SHOCK, EXPLOSION, OR ARC FLASH

The UPS is not designed for and must therefore not be installed in the following unusual operating environments:

- Damaging fumes
- Explosive mixtures of dust or gases, corrosive gases, or conductive or radiant heat from other sources
- Moisture, abrasive dust, steam or in an excessively damp environment
- Fungus, insects, vermin
- Salt-laden air or contaminated cooling refrigerant
- Pollution degree higher than 2 according to IEC 60664-1
- Exposure to abnormal vibrations, shocks, and tilting
- Exposure to direct sunlight, heat sources, or strong electromagnetic fields

Failure to follow these instructions will result in death or serious injury.

⚠ DANGER

HAZARD OF ELECTRIC SHOCK, EXPLOSION, OR ARC FLASH

Do not drill or cut holes for cables or conduits with the gland plates installed and do not drill or cut holes in close proximity to the UPS.

Failure to follow these instructions will result in death or serious injury.

⚠ WARNING

HAZARD OF ARC FLASH

Do not make mechanical changes to the product (including removal of cabinet parts or drilling/cutting of holes) that are not described in the Installation Manual.

Failure to follow these instructions can result in death, serious injury, or equipment damage.

NOTICE

RISK OF OVERHEATING

Respect the space requirements around the UPS system and do not cover the product's ventilation openings when the UPS system is in operation.

Failure to follow these instructions can result in equipment damage.

NOTICE

RISK OF EQUIPMENT DAMAGE

Do not connect the UPS output to regenerative load systems including photovoltaic systems and speed drives.

Failure to follow these instructions can result in equipment damage.

Electrical Safety

This manual contains important safety instructions that should be followed during the installation and maintenance of the UPS system.

⚠⚠DANGER

HAZARD OF ELECTRIC SHOCK, EXPLOSION, OR ARC FLASH

- Electrical equipment must be installed, operated, serviced, and maintained only by qualified personnel.
- Apply appropriate personal protective equipment (PPE) and follow safe electrical work practices.
- Disconnection devices for AC and DC must be provided by others, be readily accessible, and the function of the disconnect device marked for its function.
- Turn off all power supplying the UPS system before working on or inside the equipment.
- Before working on the UPS system, check for hazardous voltage between all terminals including the protective earth.
- The UPS contains an internal energy source. Hazardous voltage can be present even when disconnected from the mains supply. Before installing or servicing the UPS system, ensure that the units are OFF and that mains and batteries are disconnected. Wait five minutes before opening the UPS to allow the capacitors to discharge.
- The UPS must be properly earthed/grounded and due to a high leakage current, the earthing/grounding conductor must be connected first.

Failure to follow these instructions will result in death or serious injury.

When the UPS input is connected through external isolators that, when opened, isolate the neutral or when the automatic backfeed isolation is provided external to the equipment or is connected to an IT power distribution system, a label must be fitted at the UPS input terminals, and on all primary power isolators installed remotely from the UPS area and on external access points between such isolators and the UPS, by the user, displaying the following text (or equivalent in a language which is acceptable in the country in which the UPS system is installed):

⚠⚠DANGER

HAZARD OF ELECTRIC SHOCK, EXPLOSION, OR ARC FLASH

Risk of voltage backfeed. Before working on this circuit: Isolate the UPS and check for hazardous voltage between all terminals including the protective earth.

Failure to follow these instructions will result in death or serious injury.

Battery Safety

⚠⚠DANGER

HAZARD OF ELECTRIC SHOCK, EXPLOSION, OR ARC FLASH

- Battery circuit breakers must be installed according to the specifications and requirements as defined by Schneider Electric.
- Servicing of batteries must only be performed or supervised by qualified personnel knowledgeable of batteries and the required precautions. Keep unqualified personnel away from batteries.
- Disconnect charging source prior to connecting or disconnecting battery terminals.
- Do not dispose of batteries in a fire as they can explode.
- Do not open, alter, or mutilate batteries. Released electrolyte is harmful to the skin and eyes. It may be toxic.

Failure to follow these instructions will result in death or serious injury.

⚠⚠DANGER

HAZARD OF ELECTRIC SHOCK, EXPLOSION, OR ARC FLASH

Batteries can present a risk of electric shock and high short-circuit current. The following precautions must be observed when working on batteries

- Remove watches, rings, or other metal objects.
- Use tools with insulated handles.
- Wear protective glasses, gloves and boots.
- Do not lay tools or metal parts on top of batteries.
- Disconnect the charging source prior to connecting or disconnecting battery terminals.
- Determine if the battery is inadvertently grounded. If inadvertently grounded, remove source from ground. Contact with any part of a grounded battery can result in electric shock. The likelihood of such shock can be reduced if such grounds are removed during installation and maintenance (applicable to equipment and remote battery supplies not having a grounded supply circuit).

Failure to follow these instructions will result in death or serious injury.

⚠⚠DANGER

HAZARD OF ELECTRIC SHOCK, EXPLOSION, OR ARC FLASH

When replacing batteries, always replace with the same type and number of batteries or battery packs.

Failure to follow these instructions will result in death or serious injury.

NOTICE

RISK OF EQUIPMENT DAMAGE

- Wait until the system is ready to be powered up before installing batteries in the system. The time duration from battery installation until the UPS system is powered up must not exceed 72 hours or 3 days.
- Batteries must not be stored more than six months due to the requirement of recharging. If the UPS system remains de-energized for a long period, Schneider Electric recommends that you energize the UPS system for a period of 24 hours at least once every month. This charges the batteries, thus avoiding irreversible damage.

Failure to follow these instructions can result in equipment damage.

Specifications

Overview of Configurations

Breakers in the System

UIB	Unit input breaker
SSIB	Static switch input breaker
BB	Battery breaker
MBB	Maintenance bypass breaker
UOB	Unit output breaker
BF2	Backfeed protection switch

Overview of UPSs with 1500 kW I/O Cabinet – Single Utility/Mains

The illustration shows a 1500 kW UPS. The principle is the same for the other UPSs with the 1500 kW I/O cabinet.

Galaxy VX 1500 kW UPS

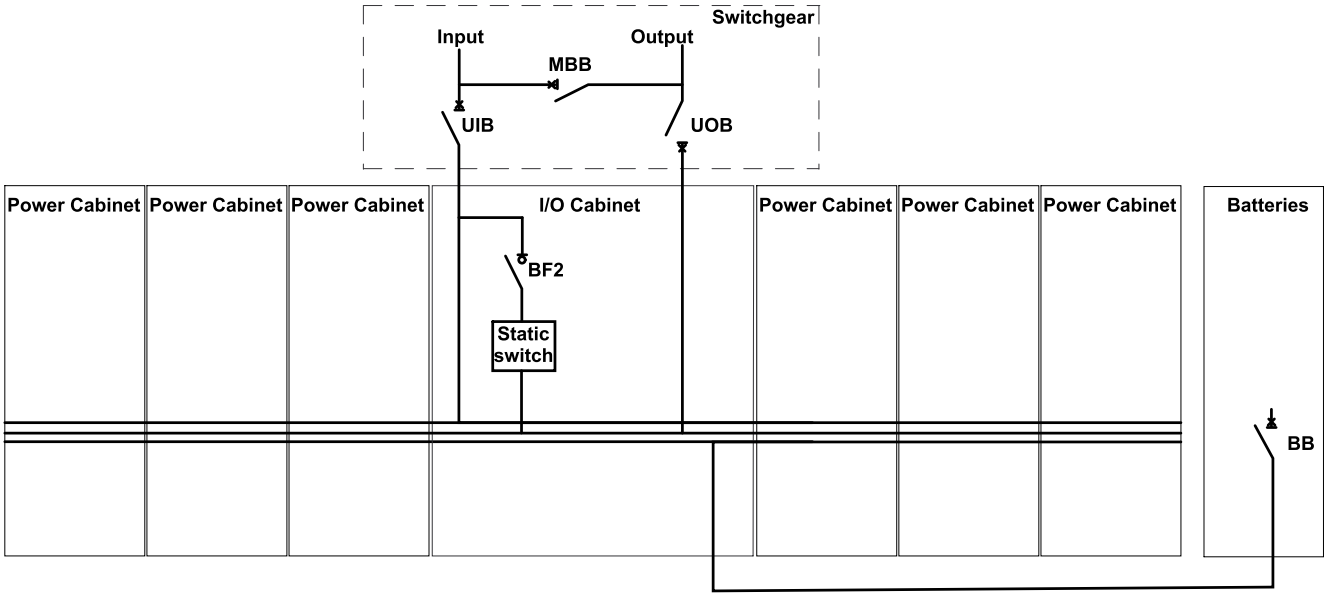

Overview of UPSs with 1500 kW I/O Cabinet – Dual Utility/Mains

The illustration shows a 1500 kW UPS. The principle is the same for the other UPSs with the 1500 kW I/O cabinet.

Galaxy VX 1500 kW UPS

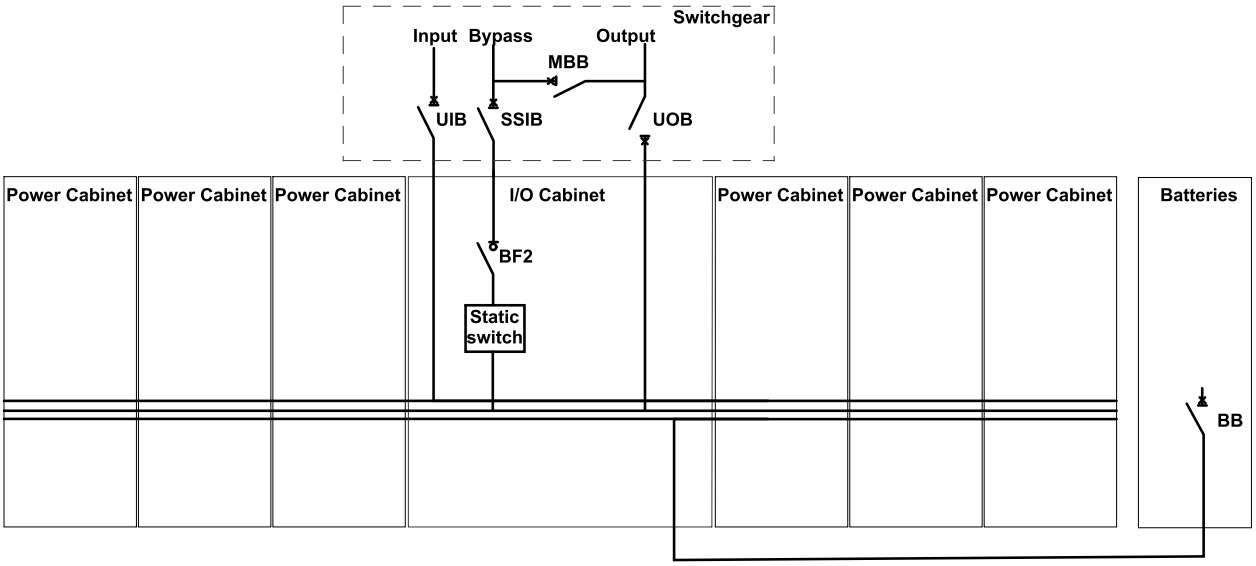

Specifications for 500 kW UPS

	Voltage (V)	380	400	415	440 V	480 V
Input Specifications	Connections	IEC: L1, L2, L3, PE [1] UL: L1, L2, L3 + G [2]				
	Input voltage range (V)[3]	340-456	340-480	353-498	374-528	408-576
	Frequency (Hz)	40-70				
	Nominal input current (A)	800	760	731	685	633
	Maximum input current (A)[4]	886	851	819	767	728
	Input current limitation (A)	890			832	760
	Total harmonic distortion (THDI)	<3% at 100% load, <4% at 50% load, <9% at 25% load				
	Input power factor	0.99 at >40% load, 0.98 at >20% load, 0.97 at >10% load				
	Protection	Contactors				
	Ramp-in	Adaptive 1-300 seconds				
Bypass Specifications	Connections	IEC: L1, L2, L3, N, PE **or** L1, L2, L3, PE [5] UL: L1, L2, L3, G **or** L1, L2, L3, N, G				
	Bypass voltage range (V)	342-418	360-440	374-457	396-484	432-528
	Frequency (Hz)	50 or 60				
	Frequency range (Hz)	Programmable: ±0.1, ±3, ±10. Default is ±3				
	Nominal bypass current (A)	767	729	703	663	606
	Maximum short circuit rating	100 kA RMS (conditioned by an internal molded switch with 90 kA peak magnetic trip)				
	Thyristor I^2t (kA^*s^2)	9680 (1250 kW I/O) 16245 (1500 kW I/O)				9165 (1250 kW I/O) 16245 (1500 kW I/O)
	BF2 magnetic trip	39 kA				
	Protection	Molded switch with trip for backfeed protection				
Output Specifications	Connections	IEC: L1, L2, L3, N, PE **or** L1, L2, L3, PE UL: L1, L2, L3, G, GEC[6] **or** L1, L2, L3, N, G				
	Overload capacity	Normal operation: 150% for 1 minute, 125% for 10 minutes Battery operation: 115% for 1 minute Bypass operation: 110%[7] continuous, 1000% for 60 milliseconds for systems with 1250 kW I/O cabinet and 100 milliseconds for systems with 1500 kW I/O cabinet				
	Output voltage tolerance	Balanced load: ±1%, Unbalanced load: ±3%				
	Dynamic load response	±5% after 2 ms, ±1% after 50 ms				
	Output power factor	1				
	Nominal output current (A)	760	722	696	656	601
	Total harmonic distortion (THDU)	<2% at 100% linear load, <3% at 100% non-linear load				
	Output frequency (Hz)	50/60 (synchronized to bypass), 50/60 Hz ±0.1% (free-running)				
	Slew rate (Hz/sec)	Programmable: 0.25, 0.5, 1, 2, 4, 6				
	Output performance classification (according to IEC/ EN62040-3)	Double-conversion: VFI-SS-111				
	Load crest factor	Up to 3 (THDU < 5%)				
	Load power factor	0.7 leading to 0.5 lagging without derating				

1. TN, TT, and IT power distribution systems are supported.
2. WYE source – solid grounded and high resistance grounded sources are supported. Corner (line) grounding is not supported.
3. The system can operate at 600 V for 1 minute.
4. At nominal input voltage and full charge.
5. TN, TT, and IT power distribution systems with no earthed line conductors are supported.
6. Per NEC 250.30.
7. 125% for 480 V.

	Voltage (V)	380	400	415	440 V	480 V
Battery Specifications	Charging power in % of output power	35% at ≤ 80% load, 12% at 100% load				40% at ≤ 80% load, 15% at 100% load
	Maximum charging power (kW)	60 at 100% load, 175 at <80% load				75 at 100% load, 200 at 80% load
	Nominal battery voltage (VDC)	480				
	Nominal float voltage (VDC)	546				
	End of discharge voltage (full load) (VDC)	384				
	End of discharge voltage (no load) (VDC)	420				
	Battery current at full load and nominal battery voltage (A)	1090				
	Battery current at full load and minimum battery voltage (A)	1362				
	Maximum battery backup time	Unlimited				
	Temperature compensation (per cell)	-3.3 mV per °C for T ≥ 25 °C, 0 mV per °C for T < 25 °C				
	Ripple current	< 5% C20 (5 minutes backup time)				
	Battery test	Manual/automatic (selectable)				
	Deep discharge protection	Yes				
	Recharge according to battery temperature	Yes				

Specifications for 750 kW UPS

	Voltage (V)	380	400	415	440 V	480 V
Input Specifications	Connections	IEC: L1, L2, L3, PE [8] UL: L1, L2, L3 + G [9]				
	Input voltage range (V)[10]	340-456	340-480	353-498	374-528	408-576
	Frequency (Hz)	40-70				
	Nominal input current (A)	1201	1139	1097	1029	950
	Maximum input current (A)[11]	1328	1276	1229	1153	1092
	Input current limitation (A)	1335			1248	1140
	Total harmonic distortion (THDI)	<3% at 100% load, <4% at 50% load, <9% at 25% load				
	Input power factor	0.99 at >40% load, 0.98 at >20% load, 0.97 at >10% load				
	Protection	Contactors				
	Ramp-in	Adaptive 1-300 seconds				
Bypass Specifications	Connections	IEC: L1, L2, L3, N, PE **or** L1, L2, L3, PE [12] UL: L1, L2, L3, G **or** L1, L2, L3, N, G				
	Bypass voltage range (V)	342-418	360-440	374-457	396-484	432-528
	Frequency (Hz)	50 or 60				
	Frequency range (Hz)	Programmable: ±0.1, ±3, ±10. Default is ±3				
	Nominal bypass current (A)	1151	1093	1054	994	909
	Maximum short circuit rating	100 kA RMS (conditioned by an internal molded switch with 90 kA peak magnetic trip)				
	Thyristor I^2t (kA^*s^2)	9680 (1250 kW I/O) 16245 (1500 kW I/O)				9165 (1250 kW I/O) 16245 (1500 kW I/O)
	BF2 magnetic trip	39 kA				
	Protection	Molded switch with trip for backfeed protection				
Output Specifications	Connections	IEC: L1, L2, L3, N, PE **or** L1, L2, L3, PE UL: L1, L2, L3, G, GEC[13] **or** L1, L2, L3, N, G				
	Overload capacity	Normal operation: 150% for 1 minute, 125% for 10 minutes Battery operation: 115% for 1 minute Bypass operation: 110%[14] continuous, 1000% for 60 milliseconds for systems with 1250 kW I/O cabinet and 100 milliseconds for systems with 1500 kW I/O cabinet				
	Output voltage tolerance	Balanced load: ±1%, Unbalanced load: ±3%				
	Dynamic load response	±5% after 2 ms, ±1% after 50 ms				
	Output power factor	1				
	Nominal output current (A)	1140	1083	1043	984	902
	Total harmonic distortion (THDU)	<2% at 100% linear load, <3% at 100% non-linear load				
	Output frequency (Hz)	50/60 (synchronized to bypass), 50/60 Hz ±0.1% (free-running)				
	Slew rate (Hz/sec)	Programmable: 0.25, 0.5, 1, 2, 4, 6				
	Output performance classification (according to IEC/ EN62040-3)	Double-conversion: VFI-SS-111				
	Load crest factor	Up to 3 (THDU < 5%)				
	Load power factor	0.7 leading to 0.5 lagging without derating				

8. TN, TT, and IT power distribution systems are supported.
9. WYE source – solid grounded and high resistance grounded sources are supported. Corner (line) grounding is not supported.
10. The system can operate at 600 V for 1 minute.
11. At nominal input voltage and full charge.
12. TN, TT, and IT power distribution systems with no earthed line conductors are supported.
13. Per NEC 250.30.
14. 125% for 480 V.

	Voltage (V)	380	400	415	440 V	480 V
Battery Specifications	Charging power in % of output power	35% at ≤ 80% load, 12% at 100% load				40% at ≤ 80% load, 15% at 100% load
	Maximum charging power (kW)	90 at 100% load, 262 at <80% load				112.5 at 100% load, 300 at 80% load
	Nominal battery voltage (VDC)	480				
	Nominal float voltage (VDC)	546				
	End of discharge voltage (full load) (VDC)	384				
	End of discharge voltage (no load) (VDC)	420				
	Battery current at full load and nominal battery voltage (A)	1634				
	Battery current at full load and minimum battery voltage (A)	2043				
	Maximum battery backup time	Unlimited				
	Temperature compensation (per cell)	-3.3 mV per °C for T ≥ 25 °C, 0 mV per °C for T < 25 °C				
	Ripple current	< 5% C20 (5 minutes backup time)				
	Battery test	Manual/automatic (selectable)				
	Deep discharge protection	Yes				
	Recharge according to battery temperature	Yes				

Specifications for 1000 kW UPS

	Voltage (V)	380	400	415	440 V	480 V
Input Specifications	Connections	IEC: L1, L2, L3, PE [15] UL: L1, L2, L3 + G [16]				
	Input voltage range (V)[17]	340-456	340-480	353-498	374-528	408-576
	Frequency (Hz)	40-70				
	Nominal input current (A)	1601	1519	1463	1370	1266
	Maximum input current (A)[18]	1771	1702	1638	1534	1456
	Input current limitation (A)	1780			1664	1520
	Total harmonic distortion (THDI)	<3% at 100% load, <4% at 50% load, <9% at 25% load				
	Input power factor	0.99 at >40% load, 0.98 at >20% load, 0.97 at >10% load				
	Protection	Contactors				
	Ramp-in	Adaptive 1-300 seconds				
Bypass Specifications	Connections	IEC: L1, L2, L3, N, PE **or** L1, L2, L3, PE [19] UL: L1, L2, L3, G **or** L1, L2, L3, N, G				
	Bypass voltage range (V)	342-418	360-440	374-457	396-484	432-528
	Frequency (Hz)	50 or 60				
	Frequency range (Hz)	Programmable: ±0.1, ±3, ±10. Default is ±3				
	Nominal bypass current (A)	1535	1458	1405	1325	1211
	Maximum short circuit rating	100 kA RMS (conditioned by an internal molded switch with 90 kA peak magnetic trip)				
	Thyristor I^2t (kA^*s^2)	9680 (1250 kW I/O) 16245 (1500 kW I/O)				9165 (1250 kW I/O) 16245 (1500 kW I/O)
	BF2 magnetic trip	39 kA				
	Protection	Molded switch with trip for backfeed protection				
Output Specifications	Connections	IEC: L1, L2, L3, N, PE **or** L1, L2, L3, PE UL: L1, L2, L3, G, GEC[20] **or** L1, L2, L3, N, G				
	Overload capacity	Normal operation: 150% for 1 minute, 125% for 10 minutes Battery operation: 115% for 1 minute Bypass operation: 110%[21] continuous, 1000% for 60 milliseconds for systems with 1250 kW I/O cabinet and 100 milliseconds for systems with 1500 kW I/O cabinet				
	Output voltage tolerance	Balanced load: ±1%, Unbalanced load: ±3%				
	Dynamic load response	±5% after 2 ms, ±1% after 50 ms				
	Output power factor	1				
	Nominal output current (A)	1519	1443	1391	1312	1203
	Total harmonic distortion (THDU)	<2% at 100% linear load, <3% at 100% non-linear load				
	Output frequency (Hz)	50/60 (synchronized to bypass), 50/60 Hz ±0.1% (free-running)				
	Slew rate (Hz/sec)	Programmable: 0.25, 0.5, 1, 2, 4, 6				
	Output performance classification (according to IEC/ EN62040-3)	Double-conversion: VFI-SS-111				
	Load crest factor	Up to 3 (THDU < 5%)				
	Load power factor	0.7 leading to 0.5 lagging without derating				

15. TN, TT, and IT power distribution systems are supported.
16. WYE source – solid grounded and high resistance grounded sources are supported. Corner (line) grounding is not supported.
17. The system can operate at 600 V for 1 minute.
18. At nominal input voltage and full charge.
19. TN, TT, and IT power distribution systems with no earthed line conductors are supported.
20. Per NEC 250.30.
21. 125% for 480 V.

	Voltage (V)	380	400	415	440 V	480 V
Battery Specifications	Charging power in % of output power	35% at ≤ 80% load, 12% at 100% load				40% at ≤ 80% load, 15% at 100% load
	Maximum charging power (kW)	120 at 100% load, 350 at <80% load				150 at 100% load, 400 at <80% load
	Nominal battery voltage (VDC)	480				
	Nominal float voltage (VDC)	546				
	End of discharge voltage (full load) (VDC)	384				
	End of discharge voltage (no load) (VDC)	420				
	Battery current at full load and nominal battery voltage (A)	2179				
	Battery current at full load and minimum battery voltage (A)	2724				
	Maximum battery backup time	Unlimited				
	Temperature compensation (per cell)	-3.3 mV per °C for T ≥ 25 °C, 0 mV per °C for T < 25 °C				
	Ripple current	< 5% C20 (5 minutes backup time)				
	Battery test	Manual/automatic (selectable)				
	Deep discharge protection	Yes				
	Recharge according to battery temperature	Yes				

Specifications for 1100 kW UPS

	Voltage (V)	380	400	415	440 V	480 V
Input Specifications	Connections	IEC: L1, L2, L3, PE [22] UL: L1, L2, L3 + G [23]				
	Input voltage range (V)[24]	340-456	340-480	353-498	374-528	408-576
	Frequency (Hz)	40-70				
	Nominal input current (A)	1761	1671	1609	1510	1393
	Maximum input current (A)[25]	1948	1872	1802	1691	1602
	Input current limitation (A)	1958			1830	1672
	Total harmonic distortion (THDI)	<3% at 100% load, <4% at 50% load, <9% at 25% load				
	Input power factor	0.99 at >40% load, 0.98 at >20% load, 0.97 at >10% load				
	Protection	Contactors				
	Ramp-in	Adaptive 1-300 seconds				
Bypass Specifications	Connections	IEC: L1, L2, L3, N, PE **or** L1, L2, L3, PE [26] UL: L1, L2, L3, G **or** L1, L2, L3, N, G				
	Bypass voltage range (V)	342-418	360-440	374-457	396-484	432-528
	Frequency (Hz)	50 or 60				
	Frequency range (Hz)	Programmable: ±0.1, ±3, ±10. Default is ±3				
	Nominal bypass current (A)	1688	1604	1546	1458	1332
	Maximum short circuit rating	100 kA RMS (conditioned by an internal molded switch with 90 kA peak magnetic trip)				
	Thyristor I^2t (kA^*s^2)	9680 (1250 kW I/O)				9165 (1250 kW I/O)
	BF2 magnetic trip	39 kA				
	Protection	Molded switch with trip for backfeed protection				
Output Specifications	Connections	IEC: L1, L2, L3, N, PE **or** L1, L2, L3, PE UL: L1, L2, L3, G, GEC[27] **or** L1, L2, L3, N, G				
	Overload capacity	Normal operation: 150% for 1 minute, 125% for 10 minutes Battery operation: 115% for 1 minute Bypass operation: 110%[28] continuous, 1000% for 60 milliseconds for systems with 1250 kW I/O cabinet and 100 milliseconds for systems with 1500 kW I/O cabinet				
	Output voltage tolerance	Balanced load: ±1%, Unbalanced load: ±3%				
	Dynamic load response	±5% after 2 ms, ±1% after 50 ms				
	Output power factor	1				
	Nominal output current (A)	1671	1588	1530	1443	1323
	Total harmonic distortion (THDU)	<2% at 100% linear load, <3% at 100% non-linear load				
	Output frequency (Hz)	50/60 (synchronized to bypass), 50/60 Hz ±0.1% (free-running)				
	Slew rate (Hz/sec)	Programmable: 0.25, 0.5, 1, 2, 4, 6				
	Output performance classification (according to IEC/ EN62040-3)	Double-conversion: VFI-SS-111				
	Load crest factor	Up to 3 (THDU < 5%)				
	Load power factor	0.7 leading to 0.5 lagging without derating				

22. TN, TT, and IT power distribution systems are supported.
23. WYE source – solid grounded and high resistance grounded sources are supported. Corner (line) grounding is not supported.
24. The system can operate at 600 V for 1 minute.
25. At nominal input voltage and full charge.
26. TN, TT, and IT power distribution systems with no earthed line conductors are supported.
27. Per NEC 250.30.
28. 125% for 480 V.

	Voltage (V)	380	400	415	440 V	480 V
Battery Specifications	Charging power in % of output power	35% at ≤ 80% load, 12% at 100% load				40% at ≤ 80% load, 15% at 100% load
	Maximum charging power (kW)	132 at 100% load, 385 at <80% load				165 at 100% load, 440 at <80% load
	Nominal battery voltage (VDC)	480				
	Nominal float voltage (VDC)	546				
	End of discharge voltage (full load) (VDC)	384				
	End of discharge voltage (no load) (VDC)	420				
	Battery current at full load and nominal battery voltage (A)	2397				
	Battery current at full load and minimum battery voltage (A)	2996				
	Maximum battery backup time	Unlimited				
	Temperature compensation (per cell)	-3.3 mV per °C for T ≥ 25 °C, 0 mV per °C for T < 25 °C				
	Ripple current	< 5% C20 (5 minutes backup time)				
	Battery test	Manual/automatic (selectable)				
	Deep discharge protection	Yes				
	Recharge according to battery temperature	Yes				

Specifications for 1250 kW UPS

	Voltage (V)	380	400	415	440 V	480 V
Input Specifications	Connections	IEC: L1, L2, L3, PE [29] UL: L1, L2, L3 + G [30]				
	Input voltage range (V)[31]	340-456	340-480	353-498	374-528	408-576
	Frequency (Hz)	40-70				
	Nominal input current (A)	2001	1899	1828	1716	1583
	Maximum input current (A)[32]	2214	2127	2048	1922	1820
	Input current limitation (A)	2225			2080	1900
	Total harmonic distortion (THDI)	<3% at 100% load, <4% at 50% load, <9% at 25% load				
	Input power factor	0.99 at >40% load, 0.98 at >20% load, 0.97 at >10% load				
	Protection	Contactors				
	Ramp-in	Adaptive 1-300 seconds				
Bypass Specifications	Connections	IEC: L1, L2, L3, N, PE **or** L1, L2, L3, PE [33] UL: L1, L2, L3, G **or** L1, L2, L3, N, G				
	Bypass voltage range (V)	342-418	360-440	374-457	396-484	432-528
	Frequency (Hz)	50 or 60				
	Frequency range (Hz)	Programmable: ±0.1, ±3, ±10. Default is ±3				
	Nominal bypass current (A)	1918	1822	1757	1657	1514
	Maximum short circuit rating	100 kA RMS (conditioned by an internal molded switch with 90 kA peak magnetic trip)				
	Thyristor I^2t (kA^*s^2)	9680 (1250 kW I/O) 16245 (1500 kW I/O)				9165 (1250 kW I/O) 16245 (1500 kW I/O)
	BF2 magnetic trip	39 kA				
	Protection	Molded switch with trip for backfeed protection				
Output Specifications	Connections	IEC: L1, L2, L3, N, PE **or** L1, L2, L3, PE UL: L1, L2, L3, G, GEC[34] **or** L1, L2, L3, N, G				
	Overload capacity	Normal operation: 150% for 1 minute, 125% for 10 minutes Battery operation: 115% for 1 minute Bypass operation: 110%[35] continuous, 1000% for 60 milliseconds for systems with 1250 kW I/O cabinet and 100 milliseconds for systems with 1500 kW I/O cabinet				
	Output voltage tolerance	Balanced load: ±1%, Unbalanced load: ±3%				
	Dynamic load response	±5% after 2 ms, ±1% after 50 ms				
	Output power factor	1				
	Nominal output current (A)	1899	1804	1739	1640	1504
	Total harmonic distortion (THDU)	<2% at 100% linear load, <3% at 100% non-linear load				
	Output frequency (Hz)	50/60 (synchronized to bypass), 50/60 Hz ±0.1% (free-running)				
	Slew rate (Hz/sec)	Programmable: 0.25, 0.5, 1, 2, 4, 6				
	Output performance classification (according to IEC/ EN62040-3)	Double-conversion: VFI-SS-111				
	Load crest factor	Up to 3 (THDU < 5%)				
	Load power factor	0.7 leading to 0.5 lagging without derating				

29. TN, TT, and IT power distribution systems are supported.
30. WYE source – solid grounded and high resistance grounded sources are supported. Corner (line) grounding is not supported.
31. The system can operate at 600 V for 1 minute.
32. At nominal input voltage and full charge.
33. TN, TT, and IT power distribution systems with no earthed line conductors are supported.
34. Per NEC 250.30.
35. 125% for 480 V.

	Voltage (V)	380	400	415	440 V	480 V
Battery Specifications	Charging power in % of output power	35% at ≤ 80% load, 12% at 100% load				40% at ≤ 80% load, 15% at 100% load
	Maximum charging power (kW)	150 at 100% load, 437 at <80% load				187.5 at 100% load, 500 at <80% load
	Nominal battery voltage (VDC)	480				
	Nominal float voltage (VDC)	546				
	End of discharge voltage (full load) (VDC)	384				
	End of discharge voltage (no load) (VDC)	420				
	Battery current at full load and nominal battery voltage (A)	2724				
	Battery current at full load and minimum battery voltage (A)	3405				
	Maximum battery backup time	1 hour				
	Temperature compensation (per cell)	-3.3 mV per °C for T ≥ 25 °C, 0 mV per °C for T < 25 °C				
	Ripple current	< 5% C20 (5 minutes backup time)				
	Battery test	Manual/automatic (selectable)				
	Deep discharge protection	Yes				
	Recharge according to battery temperature	Yes				

Specifications for 1500 kW UPS

	Voltage (V)	380	400	415	440 V	480 V
Input Specifications	Connections	IEC: L1, L2, L3, PE [36] UL: L1, L2, L3 + G [37]				
	Input voltage range (V)[38]	340-456	340-480	353-498	374-528	408-576
	Frequency (Hz)	40-70				
	Nominal input current (A)	2401	2279	2194	2059	1899
	Maximum input current (A)[39]	2657	2552	2457	2306	2184
	Input current limitation (A)	2670			2496	2280
	Total harmonic distortion (THDI)	<3% at 100% load, <4% at 50% load, <9% at 25% load				
	Input power factor	0.99 at >40% load, 0.98 at >20% load, 0.97 at >10% load				
	Protection	Contactors				
	Ramp-in	Adaptive 1-300 seconds				
Bypass Specifications	Connections	IEC: L1, L2, L3, N, PE **or** L1, L2, L3, PE [40] UL: L1, L2, L3, G **or** L1, L2, L3, N, G				
	Bypass voltage range (V)	342-418	360-440	374-457	396-484	432-528
	Frequency (Hz)	50 or 60				
	Frequency range (Hz)	Programmable: ±0.1, ±3, ±10. Default is ±3				
	Nominal bypass current (A)	2302	2187	2108	1988	1817
	Maximum short circuit rating	100 kA RMS (conditioned by an internal molded switch with 90 kA peak magnetic trip)				
	Thyristor I^2t (kA^*s^2)	16245 (1500 kW I/O)				
	BF2 magnetic trip	39 kA				
	Protection	Molded switch with trip for backfeed protection				
Output Specifications	Connections	IEC: L1, L2, L3, N, PE **or** L1, L2, L3, PE UL: L1, L2, L3, G, GEC[41] **or** L1, L2, L3, N, G				
	Overload capacity	150% for 1 minute, 125% for 10 minutes (normal operation) 115% for 1 minute (battery operation) 110% continuous,1000% for 100 milliseconds (bypass operation)				
	Output voltage tolerance	Balanced load: ±1%, Unbalanced load: ±3%				
	Dynamic load response	±5% after 2 ms, ±1% after 50 ms				
	Output power factor	1				
	Nominal output current (A)	2279	2165	2087	1968	1804
	Total harmonic distortion (THDU)	<2% at 100% linear load, <3% at 100% non-linear load				
	Output frequency (Hz)	50/60 (synchronized to bypass), 50/60 Hz ±0.1% (free-running)				
	Slew rate (Hz/sec)	Programmable: 0.25, 0.5, 1, 2, 4, 6				
	Output performance classification (according to IEC/ EN62040-3)	Double-conversion: VFI-SS-111				
	Load crest factor	Up to 3 (THDU < 5%)				
	Load power factor	0.7 leading to 0.5 lagging without derating				

36. TN, TT, and IT power distribution systems are supported.
37. WYE source – solid grounded and high resistance grounded sources are supported. Corner (line) grounding is not supported.
38. The system can operate at 600 V for 1 minute.
39. At nominal input voltage and full charge.
40. TN, TT, and IT power distribution systems with no earthed line conductors are supported.
41. Per NEC 250.30.

	Voltage (V)	380	400	415	440 V	480 V
Battery Specifications	Charging power in % of output power	35% at ≤ 80% load, 12% at 100% load				40% at ≤ 80% load, 15% at 100% load
	Maximum charging power (kW)	525 at < 80% load, 180 at 100% load,				600 at <80% load, 225 at 100% load
	Nominal battery voltage (VDC)	480				
	Nominal float voltage (VDC)	546				
	End of discharge voltage (full load) (VDC)	384				
	End of discharge voltage (no load) (VDC)	420				
	Battery current at full load and nominal battery voltage (A)	3269				
	Battery current at full load and minimum battery voltage (A)	4086				
	Maximum battery backup time	1 hour				
	Temperature compensation (per cell)	-3.3 mV per °C for T ≥ 25 °C, 0 mV per °C for T < 25 °C				
	Ripple current	< 5% C20 (5 minutes backup time)				
	Battery test	Manual/automatic (selectable)				
	Deep discharge protection	Yes				
	Recharge according to battery temperature	Yes				

Recommended Upstream Protection and Cable Sizes – IEC

⚠DANGER

HAZARD OF ELECTRIC SHOCK, EXPLOSION, OR ARC FLASH

An easily accessible breaker is required for upstream protection. Maximum fault current disconnection time: 46 seconds at 200% input.

Failure to follow these instructions will result in death or serious injury.

NOTE: Overcurrent protection is to be provided by others.

Cable sizes in this manual are based on table B.52.12 and B.52.13 of IEC 60364–5–52 with the following assertions:

- 90 °C conductors
- An ambient temperature of 30 °C
- Use of copper or aluminium conductors
- Installation method F4 for DC cables and installation method F5 for AC cables, corrected for single layer in perforated cable tray.

PE cables are sized in accordance with IEC 60364-5-54 table 54.2 Minimum cross-sectional area of protective conductors.

NOTE: Always consider the PE size according to the complete electrical installation.

If the ambient temperature is greater than 30 °C, larger conductors are to be selected in accordance with the correction factors of the IEC.

NOTE: The use of aluminium conductors can limit the number of parallel Li-ion battery cabinets. Please contact Schneider Electric for more information.

Recommended Upstream Protection and Cable Sizes for 1250 kW UPS

	Maximum OCPD (A)				Conductors per Phase Copper/ Aluminium (mm²)				PE Conductor (mm²)			
	380 V	**400 V**	**415 V**	**440 V**	**380 V**	**400 V**	**415 V**	**440 V**	**380 V**	**400 V**	**415 V**	**440 V**
Input	2500 I_r=0.9	2500 I_r=0.9	2500 I_r=0.9	2500 I_r=0.9	5x240/ 6x300	5x240/ 6x300	5x240/ 6x300	5x240/ 6x300	3x240/ 3x300	3x240/ 3x300	3x240/ 3x300	3x240/ 3x300
Bypass	2000 I_r=0.98	2000 I_r=0.95	2000 I_r=0.9	2000 I_r=0.9	4x300/ 5x300	4x300/ 5x300	4x240/ 5x300	4x240/ 5x300	2x300/ 3x300	2x300/ 3x300	2x240/ 3x300	2x240/ 3x300
Output	2000 I_r=0.98	2000 I_r=0.95	2000 I_r=0.9	2000 I_r=0.9	4x300/ 5x300	4x300/ 5x300	4x240/ 5x300	4x240/ 5x300	2x300/ 3x300	2x300/ 3x300	2x240/ 3x300	2x240/ 3x300
Battery	4000	4000	4000	4000	6x300/ 7x300	6x300/ 7x300	6x300/ 7x300	6x300/ 7x300	3x300/ 4x300	3x300/ 4x300	3x300/ 4x300	3x300/ 4x300

Recommended Upstream Protection and Cable Sizes for 1500 kW UPS

	Maximum OCPD (A)				Conductors per Phase Copper/ Aluminium (mm²)				PE Conductor (mm²)			
	380 V	**400 V**	**415 V**	**440 V**	**380 V**	**400 V**	**415 V**	**440 V**	**380 V**	**400 V**	**415 V**	**440 V**
Input	3200[42]	3200[42]	3200[42]	2500[43]	7x240/ 9x240	7x240/ 9x240	7x240/ 9x240	6x240/ 8x240	4x240/ 5x240	4x240/ 5x240	4x240/ 5x240	3x240/ 4x240
Bypass	2500[44]	2500[42]	2500[42]	2000[43]	6x240/ 7x240	5x240/ 7x240	5x240/ 7x240	5x240/ 6x240	3x240/ 4x240	3x240/ 4x240	3x240/ 4x240	3x240/ 3x240
Output	2500[44]	2500[42]	2500[42]	2000[43]	6x240/ 7x240	5x240/ 7x240	5x240/ 7x240	5x240/ 6x240	3x240/ 4x240	3x240/ 4x240	3x240/ 4x240	3x240/ 3x240
Battery	4000	4000	4000	4000	8x240/ 10x240	8x240/ 10x240	8x240/ 10x240	8x240/ 10x240	4x240/ 5x240	4x240/ 5x240	4x240/ 5x240	4x240/ 5x240

Recommended Upstream Protection and Cable Sizes – UL

⚠CAUTION

HAZARD OF FIRE

- Connect only to a circuit with the below specifications.
- Connect only to a circuit provided with maximum a 1600 A branch circuit overcurrent protection in accordance with the National Electrical Code, ANSI/NFPA70, and the Canadian Electrical Code, Part I, C22.1.

Failure to follow these instructions can result in injury or equipment damage.

NOTE: Overcurrent protection is to be provided by others.

NOTE: All wiring must comply with all applicable national and/or electrical code (National Electrical Code, ANSI/NFPA 70).

Cable sizes in this manual are based on Table 310.15 of the National Electrical Code 2014 (NEC) with the following assertions:

- 90 °C conductors (THHN) for 75 °C termination
- Not more than 3 current carrying conductors in each conduit
- An ambient temperature of max. 30 °C
- Use of copper or aluminium conductors
- 100% rated breakers
- Nominal operating conditions

42. Long-time setting (I_r) = 0.9.
43. Long-time setting (I_r) = 1.0.
44. Long-time setting (I_r) = 0.95.

If the ambient room temperature is greater than 30 °C, use larger or additional parallel conductors in accordance with the correction factors of the NEC. The maximum allowable conductor size is 600 kcmil.

Equipment Grounding Conductors (EGC) are sized in accordance with NEC Article 250.122 and Table 250.122 Minimum size equipment conductor for grounding equipment.

NOTE: Always consider the EGC size according to the complete electrical installation.

NOTE: The use of aluminium conductors can limit the number of parallel Li-ion battery cabinets. Please contact Schneider Electric for more information.

Recommended Upstream Protection and Cable Sizes for 1500 kW UPS

	Maximum OCPD (A)	Conductors per Phase Copper/ Aluminium (kcmil)	Equipment Grounding Conductor Copper/Aluminium[45]
Input	2500[46]	6x600/ 8x600	350 kcmil/ 400 kcmil
Bypass	2000[46]	5x600/ 6x600	250 kcmil/ 350 kcmil
Output	2000[46]	5x600/ 6x600	250 kcmil/ 350
Battery	5000[47]	11x600/ 14x600	700 kcmil/ –

Recommended Bolt and Lug Sizes for Copper Cables

Cable Size	Terminal Bolt Diameter	Cable Lug Type	Crimping Tool	Die
1/0 AWG	M12 x 35 mm	LCCF1/0–12–X	CT930	CD-920–2/0 Black P45
2/0 AWG	M12 x 35 mm	LCCF2/0–12–X	CT930	CD-920–3/0 Orange P50
3/0 AWG	M12 x 35 mm	LCCF3/0–12–X	CT930	CD-920–4/0 Purple P54
250 kcmil	M12 x 35 mm	LCCF250–12–X	CT-940CH/CT-2940	CD-920–300 White P66
300 kcmil	M12 x 35 mm	LCCF300–12–6	CT-940CH/CT-2940	CD-920–350 Red P71
400 kcmil	M12 x 35 mm	LCCF400–12–6	CT-940CH/CT-2940	CD-920–500 Brown P87
500 kcmil	M12 x 35 mm	LCCF500–12–6	CT-940CH/CT-2940	CD-920–500A Pink P99
600 kcmil	M12 x 40 mm	LCCF600–12–6	CT-940CH/CT-2940	CD-920–750 Black P106

Recommended Bolt and Lug Sizes for Aluminium Cables

Cable Size	Terminal Bolt Diameter	Cable Lug Type	Crimping Tool	Die
2/0 AWG	M12 x 40 mm	LAB2/0-12-5	CT930	Olive P54
3/0 AWG	M12 x 40 mm	LAB3/0-12-5	CT930	Ruby P60
250 kcmil	M12 x 40 mm	LAB250-12-5	CT930	Red P71
300 kcmil	M12 x 40 mm	LAB300-12-2	CT930	Blue P76
400 kcmil	M12 x 40 mm	LAB400-12-2	CT930	Green P94
500 kcmil	M12 x 40 mm	LAB500-12-2	CT930	Pink P99
600 kcmil	M12 x 40 mm	LAB600-12-2	CT930	Black P106

45. If the conductors are run in conduits, there must be one conductor in each conduit.
46. Long-time setting (I_r) = 1.0
47. Long-time setting (I_r) = 0.9

Torque Specifications

Bolt size	Torque
M6	5 Nm (3.69 lb-ft)
M8	17.5 Nm (12.91 lb-ft)
M10	30 Nm (22 lb-ft)
M12	50 Nm (36.87 lb-ft)

Environment

	Operating	Storage
Temperature	0 °C to 40 °C (32 °F to 104 °F) 0 °C to 50 °C (32 °F to 122 °F) when derated to 75% power[48]	-15 °C to 40 °C (5 °F to 104 °F) for systems with batteries -25 °C to 55 °C (-13 °F to 131 °F) for systems without batteries
Relative humidity	0 – 95% non-condensing	0 – 95% non-condensing
Altitude derating according to ANSI C57.96–1999[49]	1000 m (3300 ft): 1.000 1500 m (5000 ft): 0.975 2000 m (6600 ft): 0.950 2500 m (8300 ft): 0.925 3000 m (10000 ft): 0.900	0 – 15000 m (0 – 50000 ft)
Audible noise one meter (three feet) from surface	62 dB at 70% load 69.5 dB at 100% load for 400 V systems 68 dB at 100% load for 480 V systems	
Protection class	IP20	
Color	RAL 9003 white	

Heat Dissipation (BTU/hr) for UPSs with 1500 kW I/O Cabinet

Heat Dissipation for 500 kW UPS

	Normal operation					ECO mode				
Voltage (V)	**380**	**400**	**415**	**440 V**	**480 V**	**380**	**400**	**415**	**440 V**	**480 V**
25% load	17309	16387	16387	16387	18698	5618	5618	5618	6056	6495
50% load	32774	30938	30938	31396	31855	7747	7747	7747	7747	7747
75% load	53313	50542	50542	50542	50542	11620	11620	11620	10969	10319
100% load	86017	82260	82260	75723	69234	13758	13758	13758	13758	13758

	ECOnversion					Battery operation				
Voltage (V)	**380**	**400**	**415**	**440 V**	**480 V**	**380**	**400**	**415**	**440 V**	**480 V**
25% load	6495	6495	6495	7155	7818	18234	18234	18234	18234	18234
50% load	7747	7747	7747	7747	7747	31855	31855	31855	31855	31855
75% load	11620	11620	11620	10969	10319	53313	53313	53313	53313	53313
100% load	15493	13758	13758	13758	13758	78519	78519	78519	78519	78519

48. For temperatures between 40 °C and 50 °C, the load power rating must be derated with 2.5% per °C of rated output power. Above 40 °C the minimum input voltage is 340 V, and from 380 V to 340 V, the charge power must be linearly derated from 12% to 1%.
49. Maximum operation altitude is 3000 m (10000 ft).

Heat Dissipation for 750 kW UPS

	Normal operation					ECO mode				
Voltage (V)	**380**	**400**	**415**	**440 V**	**480 V**	**380**	**400**	**415**	**440 V**	**480 V**
25% load	26656	25271	25271	25271	27351	9084	9084	9084	9413	9742
50% load	51926	49160	49160	47782	46407	12924	12924	12924	12272	11620
75% load	86236	82053	82053	77888	73741	17430	17430	17430	16453	15478
100% load	134684	129025	129025	117778	106625	23240	23240	23240	21938	20637

	ECOnversion					Battery operation				
Voltage (V)	**380**	**400**	**415**	**440 V**	**480 V**	**380**	**400**	**415**	**440 V**	**480 V**
25% load	9742	9742	9742	10733	11727	27351	27351	27351	27351	27351
50% load	12924	12924	12924	12924	12924	47782	47782	47782	47782	47782
75% load	17430	17430	17430	16453	15478	79969	79969	79969	79969	79969
100% load	23240	23240	23240	21938	20637	117778	117778	117778	117778	117778

Heat Dissipation for 1000 kW UPS

	Normal operation					ECO mode				
Voltage (V)	**380**	**400**	**415**	**440 V**	**480 V**	**380**	**400**	**415**	**440 V**	**480 V**
25% load	36468	34617	34617	33888	36468	12112	12112	12112	12112	12112
50% load	71083	67389	67389	60137	61876	17232	17232	17232	16362	15493
75% load	123390	117778	117778	98514	95564	23240	23240	23240	21938	20637
100% load	187156	179579	179579	149141	145873	30987	30987	30987	29251	27516

	ECOnversion					Battery operation				
Voltage (V)	**380**	**400**	**415**	**440 V**	**480 V**	**380**	**400**	**415**	**440 V**	**480 V**
25% load	13334	13334	13334	14313	15294	36468	35819	36468	36468	36468
50% load	17254	17254	17254	16956	16657	63710	62976	63710	63710	63710
75% load	24358	24358	24358	22496	20637	106625	104128	106625	106625	106625
100% load	31342	31342	31342	29428	27516	157038	156664	157038	157038	157038

Heat Dissipation for 1250 kW UPS

	Normal operation					ECO mode				
Voltage (V)	**380**	**400**	**415**	**440 V**	**480 V**	**380**	**400**	**415**	**440 V**	**480 V**
25% load	44427	42118	42118	42118	44427	12950	12950	12950	13497	14044
50% load	86543	81934	81934	78490	75057	19367	19367	19367	18282	17198
75% load	147223	140237	140237	129814	119455	25796	25796	25796	24172	22549
100% load	224474	215042	215042	196297	177708	30065	30065	30065	30065	30065

	ECOnversion					Battery operation				
Voltage (V)	**380**	**400**	**415**	**440 V**	**480 V**	**380**	**400**	**415**	**440 V**	**480 V**
25% load	15569	15569	15569	17156	18748	45585	45585	45585	45585	45585
50% load	19394	19394	19394	19721	20047	79637	79637	79637	79637	79637
75% load	27191	27191	27191	25681	24172	133281	133281	133281	133281	133281
100% load	34838	34838	34838	32451	30065	196297	196297	196297	196297	196297

Heat Dissipation for 1500 kW UPS

	Normal operation					ECO mode				
Voltage (V)	**380**	**400**	**415**	**440 V**	**480 V**	**380**	**400**	**415**	**440 V**	**480 V**
25% load	53313	50542	50542	50680	53313	15540	15540	15540	16131	16853
50% load	103851	98321	98321	91275	92813	23240	23240	23240	21626	23240
75% load	176667	168285	168285	151832	147481	30956	30956	30956	28889	27059
100% load	269368	258050	258050	234549	213250	36079	36079	36079	37428	36079

	ECOnversion					Battery operation				
Voltage (V)	**380**	**400**	**415**	**440 V**	**480 V**	**380**	**400**	**415**	**440 V**	**480 V**
25% load	18683	18683	18683	17234	22054	54702	51372	54702	54702	54285
50% load	23273	23273	23273	20325	23129	95564	95014	95564	95564	96666
75% load	32629	32629	32629	26436	27059	159938	159521	159938	159938	154530
100% load	41806	41806	41806	35819	36079	235556	236677	235556	235556	229962

Weights and Dimensions for UPSs with 1500 kW I/O Cabinet

Part Number	Parts	Weight kg (lbs)	Height mm (in)	Width mm (in)	Depth mm (in)
• GVX500K1500HS • GVX500K1500GS	In total – Power cabinets – I/O cabinet	1956 (4312) 2x540 (2x1190) 876 (1931)	1970 (77.6)	3200 (126.0) 2x600 (2x23.6) 2000 (78.7)	900 (35.4)
• GVX750K1500HS • GVX750K1500GS	In total – Power cabinets – I/O cabinet	2496 (5503) 3x540 (3x1190) 876 (1931)	1970 (77.6)	3800 (149.6) 3x600 (3x23.6) 2000 (78.7)	900 (35.4)
• GVX1000K1500HS • GVX1000K1500GS	In total – Power cabinets – I/O cabinet	3036 (6693) 4x540 (4x1190) 876 (1931)	1970 (77.6)	4400 (173.2) 4x600 (4x23.6) 2000 (78.7)	900 (35.4)
• GVX1250K1500HS • GVX1250K1500GS	In total – Power cabinets – I/O cabinet	3576 (7884) 5x540 (5x1190) 876 (1931)	1970 (77.6)	5000 (196.9) 5x600 (5x23.6) 2000 (78.7)	900 (35.4)
• GVX1500K1500HS • GVX1500K1500GS	In total – Power cabinets – I/O cabinet	4116 (9074) 6x540 (6x1190) 876 (1931)	1970 (77.6)	5600 (220.5) 6x600 (6x23.6) 2000 (78.7)	900 (35.4)
• GVX1750K1500HS • GVX1750K1500GS	In total – Power cabinets – I/O cabinet	4656 (10265) 7x540 (7x1190) 876 (1931)	1970 (77.6)	6200 (244.1) 7x600 (7x23.6) 2000 (78.7)	900 (35.4)

Clearance for UPSs with 1500 kW I/O Cabinet

NOTE: Clearance dimensions are published for airflow and service access only. Consult with the local safety codes and standards for additional requirements in your local area.

NOTE: The UPS system can be placed up against a wall with no requirement for rear or side access.

Front View

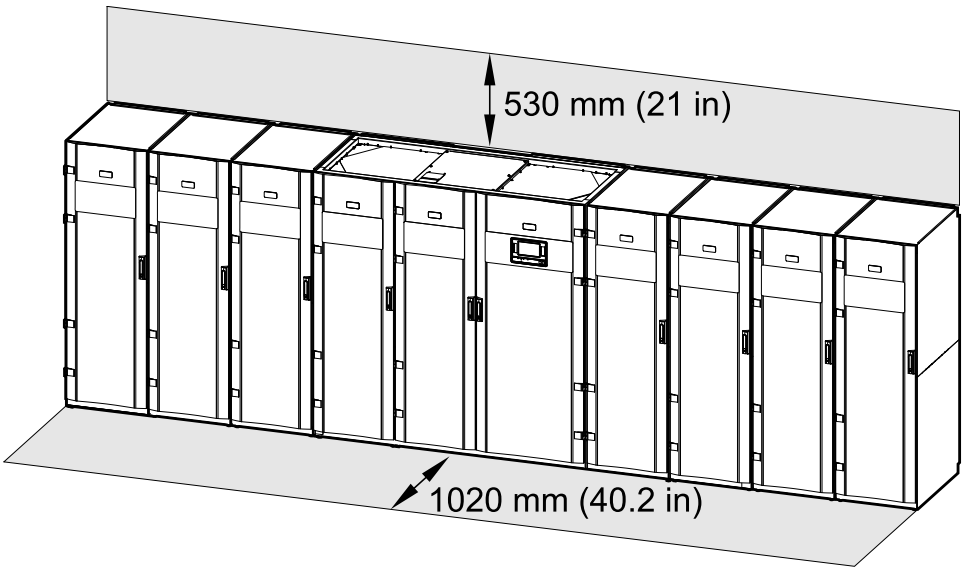

Guidance for Organizing Battery Cables

NOTE: For 3rd party batteries, use only high rate batteries for UPS applications.

NOTE: When the battery bank is placed remotely, the organizing of the cables is important to reduce voltage drop and inductance. The distance between the battery bank and the UPS must not exceed 200 m (656 ft). Contact Schneider Electric for installations with a longer distance.

NOTE: To minimize the risk of electromagnetic radiation, it is highly recommended to follow the below guidance and to use grounded metallic tray supports.

Cable Length	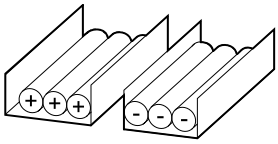	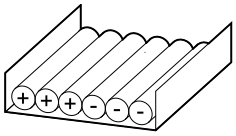	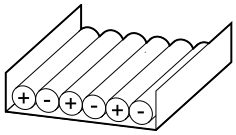	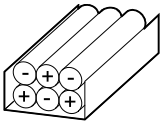
<30 m	Not recommended	Acceptable	Recommended	Recommended
31–75 m	Not recommended	Not recommended	Acceptable	Recommended
76–150 m	Not recommended	Not recommended	Acceptable	Recommended
151–200 m	Not recommended	Not recommended	Not recommended	Recommended

Overview of Supplied Installation Kits

Installation Kits Shipped with the I/O Cabinet

Installation Kit 0M-816661

Part	Used in	Number of units
Jack	Remove the Cabinets from the Pallet, page 38	1 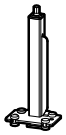
Floor protection plate		1 
Hexagonal socket for drilling machine		1 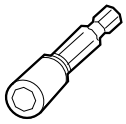

Installation Kit 0M-821667

NOTE: The rear anchoring bracket is shipped on the pallet.

Part	Used in	Number of units
Rear anchoring bracket	Mount the Rear Anchoring Brackets, page 42	1 

Installation Kit 0H-9101

Part	Used in	Number of Units
Angle for left side of the rear anchoring bracket 870-30411	Mount the Rear Anchoring Brackets, page 42	1 
Angle for right side of the rear anchoring bracket 870-30412		1 
M8 x 20 hexagonal torx with washer		8 
1 mm leveling shims		30 
EMC cover left 0M-82316	Position the Cabinets, page 44	1

Part	Used in	Number of Units
		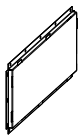
EMC cover right 0M-98993		1 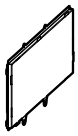
M6 nut with washer		22 
Cable ties for signal cables	Signal Cables, page 62	50
Temperature sensor 0M-1160	Signal Cable Connections to Classic Battery Cabinets (Boards 0P6547, 0P6549, 0P6552), page 70	2
Terminator for modbus	Connect the Modbus Cables, page 79	2 

Installation Kit 0H-9161 for Single Mains

Part	Used in	Number of Units
Vertical single mains busbar 880–99058 for L1	Install the Single Utility/Mains Installation Kit 0H-9161, page 56	1 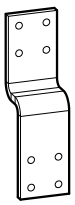
Vertical single mains busbar 880–99059 for L2		1 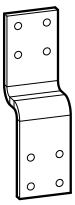
Vertical single mains busbar 880–99057 for L3		1 
Horizontal single mains busbars 880–99060		3 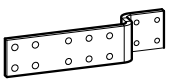

Part	Used in	Number of Units
M10 nut with washer		24 
M10 x 60 hexagonal torx with washer		36 

Installation Kit 0H-1102

Part	Used in	Number of units
Neutral busbar 880–5501	Connect the Power Cables in a 380 V, 400 V, 415, and 440 V System, page 57	1 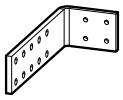
M8 x 35 hexagonal torx with washer		4 

Installation Kit 0M-99259

Part	Used in	Number of Units
Front anchoring bracket for I/O cabinet	Mount the Front Anchoring Brackets, page 60	1 

Installation Kit 0H-1074

Part	Used in	Number of Units
Optical fiber cable 0W7819	Route the Signal Cables between the I/O Cabinet and the Power Cabinets, page 62	1 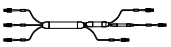
Optical fiber cable 0W7822		1 
Optical fiber cable 0W7827		1 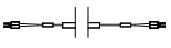
Display cable 0W7853	Do not install. Installation must be performed by Schneider Electric.	1 
Display cable 0W7858		1 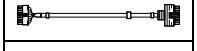
Display cable 0W7859		1 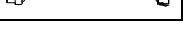

Installation Kit 0H-0889

Part	Used in	Number of Units
PBUS 1 cable 0W7995	Route the PBUS Cables between Parallel UPS Units, page 77	1 
PBUS 2 cable 0W7996		1 

Installation Kit 0H-9097

NOTE: Save this installation kit for the field service representative. The busbars will be installed by Schneider Electric during assembly service.

Installation Kit 0H-9128

NOTE: Save this installation kit for the field service representative. The busbars will be installed by Schneider Electric during assembly service.

Installation Kit 0H-9096

NOTE: Save this installation kit for the field service representative. The busbars will be installed by Schneider Electric during assembly service.

Installation Kit 0H-9129

NOTE: Save this installation kit for the field service representative. The busbars will be installed by Schneider Electric during assembly service.

Installation Kit 0M-92449

NOTE: Save this installation kit for the field service representative. The display will be installed by Schneider Electric during assembly service.

Installation Kits Shipped with the Power Cabinet

Installation Kit 0H-9102

NOTE: These installation kit parts are shipped in the packaging of the power cabinet.

Part	Used in	Number of Units
Rear anchoring bracket for power cabinet 0M-818242	Mount the Rear Anchoring Brackets, page 42	1 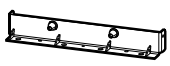
M8 x 20 hexagonal torx with washer		2 
Front anchoring bracket for power cabinet 0M-816684	Mount the Front Anchoring Brackets, page 60	1 
Long top baying bracket 0M-821220	Position the Cabinets, page 44	1

Part	Used in	Number of Units
		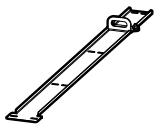
M6 x 16 torx screw with washer		15 
M10 nut with washer		24 
M10 x 35 hexagonal torx with washer		12 
1 mm leveling shims		10 
Ground interconnection busbar 880-99027	Save for the field service representative. The busbars will be installed by Schneider Electric during assembly service.	1 
M8 nut with washer		4 
M8 x 35 mm hexagonal torx with washer		4 
Interconnection busbar 880-10146 **and** 880-9720 from power cabinet to power cabinet (neutral)		1 
Interconnection busbar 0M-140035 power cabinet to power cabinet (battery +)		1 
Interconnection busbar 0M-97886 power cabinet to power cabinet (output)		3 
Interconnection busbar 0M-819336 power cabinet to power cabinet (battery -)		1 
Interconnection busbar 0M-97885 power cabinet to power cabinet (input)		3 

Installation Procedure

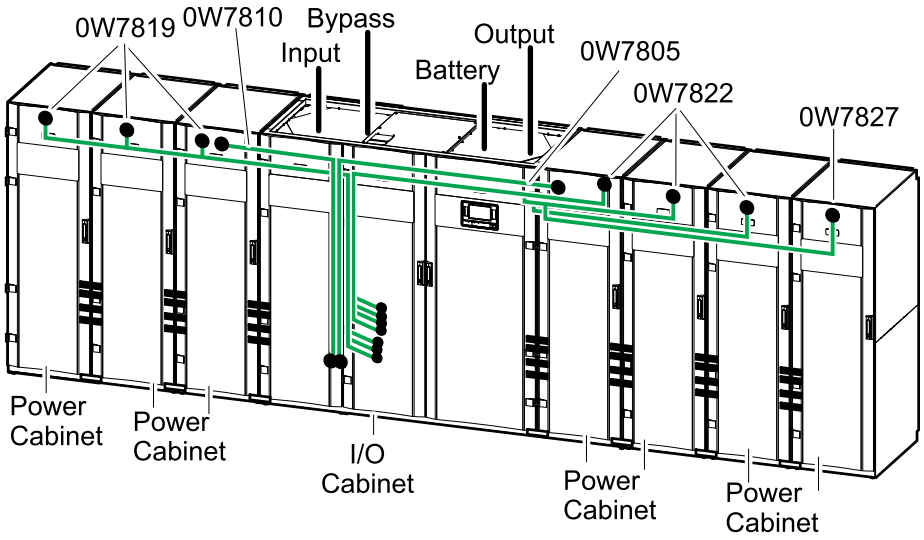

1. Remove the Cabinets from the Pallet, page 38.
2. Mount the Rear Anchoring Brackets, page 42.
3. Position the Cabinets, page 44.
4. Prepare the I/O cabinet for power cables. Follow one of the procedures:
   - Prepare the I/O Cabinet for Power Cables in Top Cable Entry Systems, page 54.
   - Prepare the I/O Cabinet for Power Cables in Bottom Cable Entry Systems, page 55.
5. In single mains systems only: Install the Single Utility/Mains Installation Kit 0H-9161, page 56.
6. Connect the power cables. Follow one of the procedures:
   - Connect the Power Cables in a 380 V, 400 V, 415, and 440 V System, page 57.
   - Connect the Power Cables in a 480 V System, page 59.
7. Mount the Front Anchoring Brackets, page 60.
8. Route the Signal Cables between the I/O Cabinet and the Power Cabinets, page 62.
9. Prepare for External Signal Cables, page 65.
10. Connect the Emergency Power Off (EPO), page 72.
11. Option: Connect External Synchronization, page 72.
12. Option: Connect Equipment to Input Contacts and Output Relays, page 75.
13. Option: Route the PBUS Cables between Parallel UPS Units, page 77.
14. Option: Connect the Modbus Cables, page 79.
15. Final Mechanical Assembly, page 82.

Mechanical Installation

Remove the Cabinets from the Pallet

⚠WARNING

HAZARD OF TILTING

Do not use a jack in the front and rear transport bracket at the same time.

Failure to follow these instructions can result in death, serious injury, or equipment damage.

⚠WARNING

HAZARD OF SERIOUS INJURY

Do not put your hands or feet under the cabinet while removing the pallet parts.

Failure to follow these instructions can result in death, serious injury, or equipment damage.

NOTICE

RISK OF EQUIPMENT DAMAGE

Ensure that you have sufficient free space around the cabinets for the removal of the middle pallet part. The 1500 kW I/O cabinet requires 1.5 m (59 in) free space on the right or left side of the cabinet.

Failure to follow these instructions can result in equipment damage.

NOTICE

RISK OF EQUIPMENT DAMAGE

Ensure that the floor is level and can support the weight of the jack when it carries the cabinet.

Failure to follow these instructions can result in equipment damage.

NOTICE

RISK OF EQUIPMENT DAMAGE

Be careful not to damage the cabinets when using the jack.

Failure to follow these instructions can result in equipment damage.

NOTE: The procedure shows the removal of the power cabinet when the procedures are identical.

1. Use the installation kit 0M-816661 shipped with the I/O cabinet. Use the jack and the floor protection plate in the kit for all cabinets in this procedure.

2. Place the floor protection plate under the pallet on the rear of the cabinet.

Rear View of the I/O Cabinet

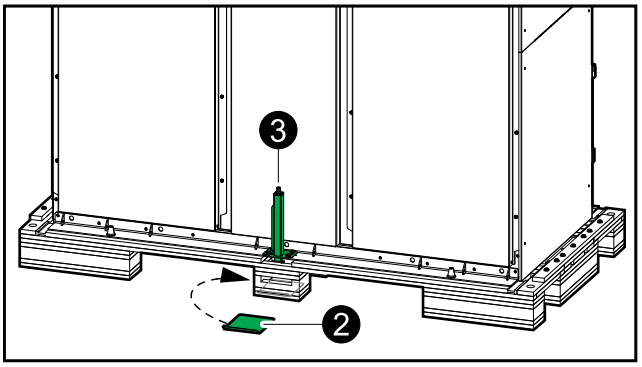

Rear View of the Power Cabinet

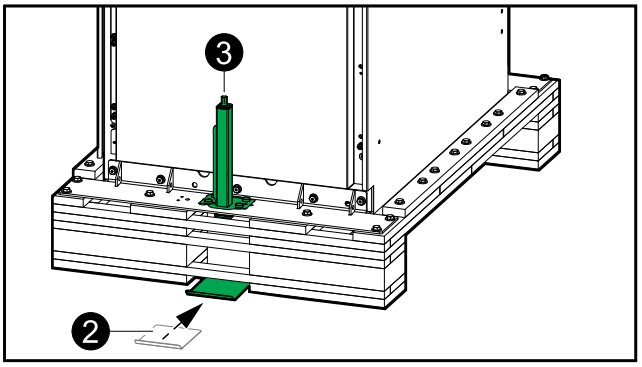

3. Place the jack from the installation kit in the hole in the transport bracket on the rear of the cabinet.
4. Loosen and remove the bolts from the rear transport bracket and from the middle pallet part. Remove the pallet parts marked with * and save for step 8 for the I/O cabinet.

Rear View of the Power Cabinet

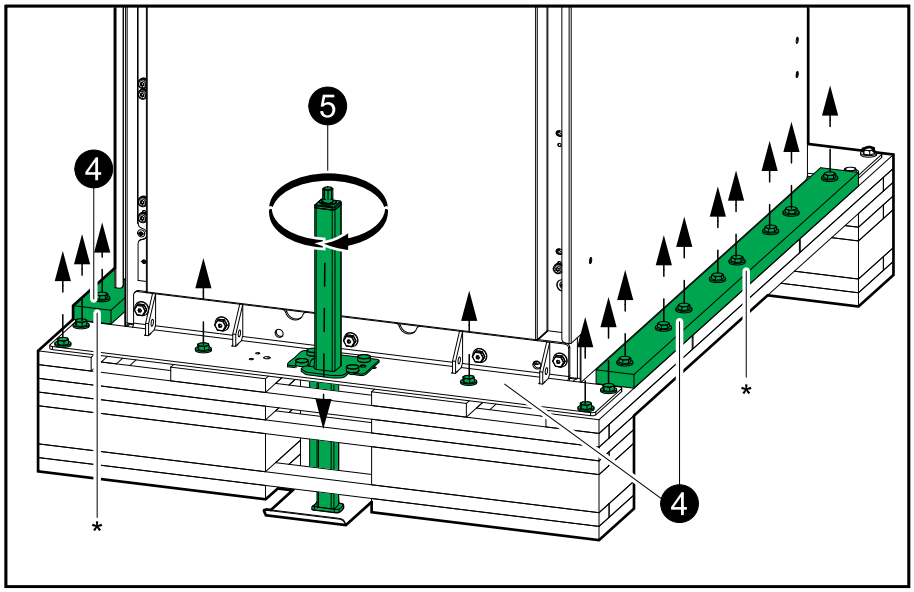

5. Use a drilling machine with the provided hexagonal socket to activate the jack, slide it into position in the bracket, and to make contact with the floor protection plate.

   NOTE: Reduce the drill torque to minimum to prevent kickback.

6. Use the jack to lift the pallet to the top position.

7. Remove the rear and middle pallet parts and save the part marked with * for step 8.

Rear View of the Power Cabinet

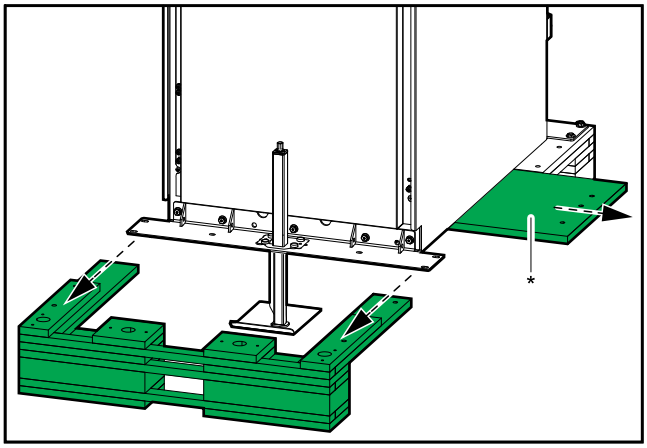

8. Place support under the metal bracket:
   - For the power cabinets, place the pallet parts from step 4 and 7 under the transportation bracket.
   - For the I/O cabinet, place the pallet parts from step 4 as support.

Rear View of the Power Cabinet

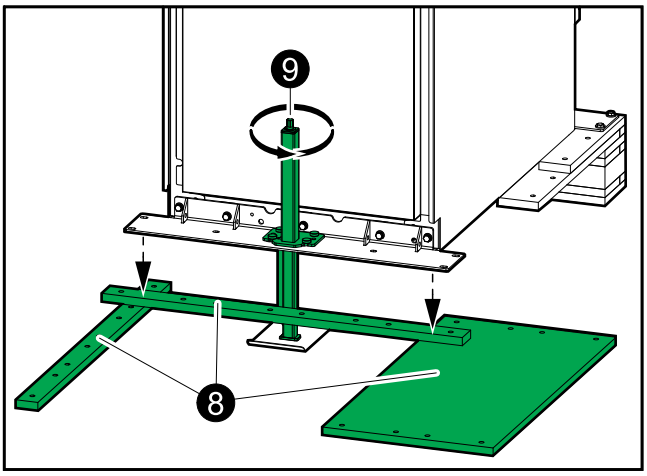

9. Use a drilling machine to lower the cabinet down onto the support.
10. Move the floor protection plate and the jack from the rear to the front side.

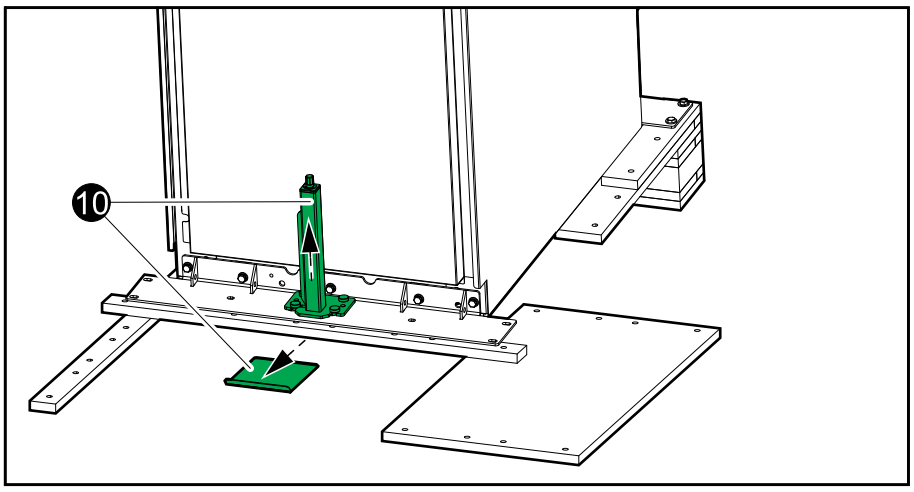

11. Loosen and remove the bolts from the front transport bracket.

Front View of the Power Cabinet

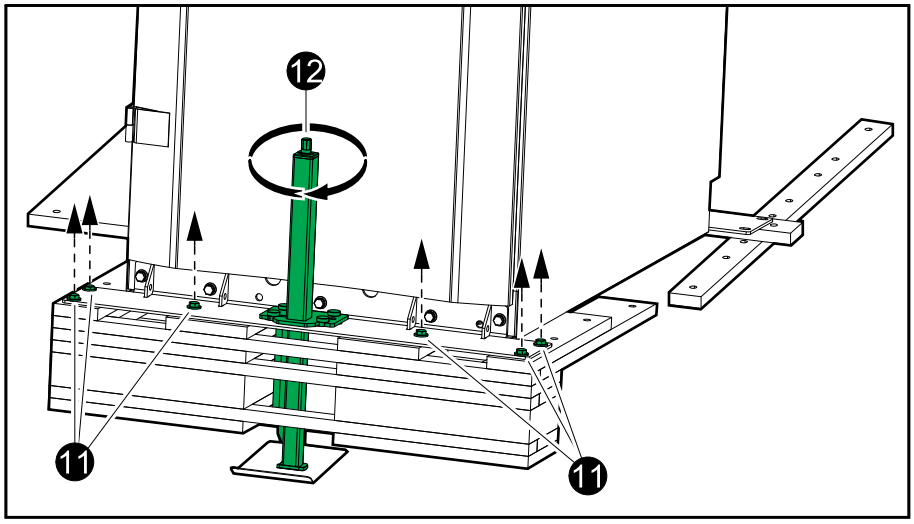

12. Use a drilling machine with the provided hexagonal socket to activate the jack, slide it into position in the bracket, and to lift the pallet to the top position.
13. Remove the front pallet parts.

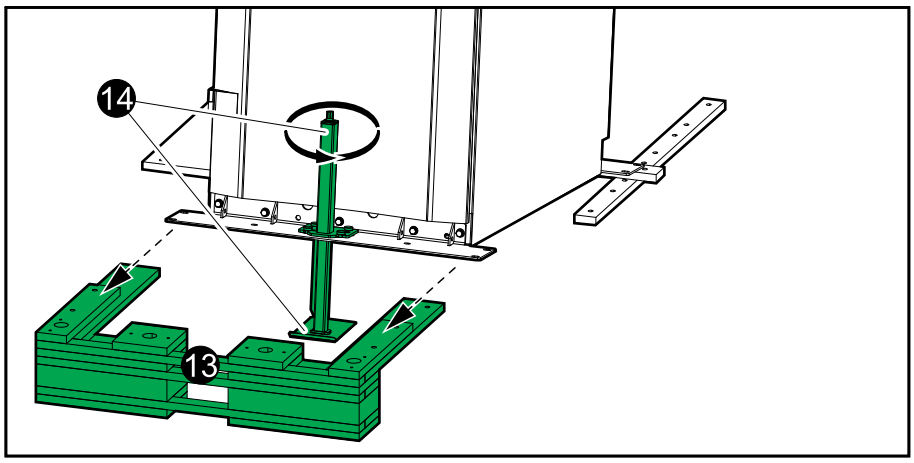

14. Use the jack to lower the cabinet onto the floor until the wheels connect with the floor. Remove the jack and the floor protection plate.

15. Wheel the cabinet away and remove the remaining pallet parts.

⚠WARNING

HAZARD OF TILTING

Be alert to uneven floors and doorsteps when moving the cabinet on its wheels to avoid overbalancing and tipping the cabinet.

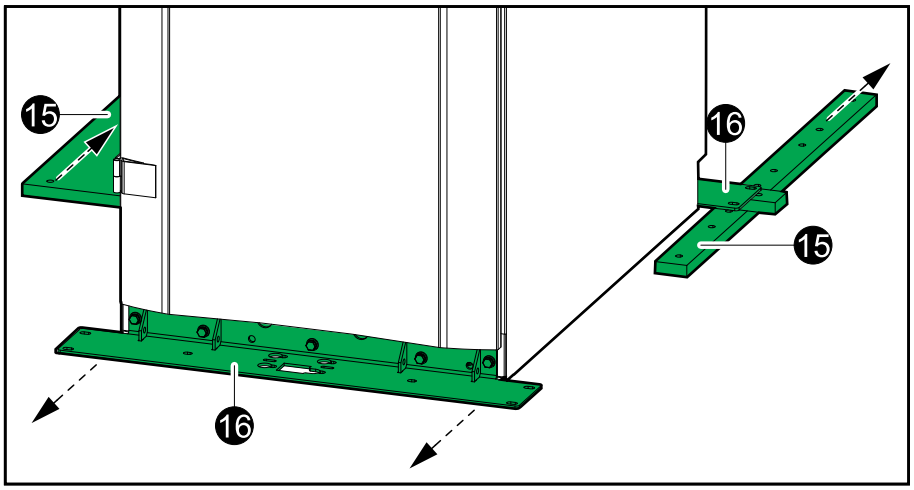

16. Remove the front and rear transportation brackets.

    The cabinet can now be moved on the built-in wheels to the installation area.

Mount the Rear Anchoring Brackets

⚠DANGER

HAZARD OF TILTING

All rear and front anchoring brackets must be installed.

Failure to follow these instructions will result in death or serious injury.

⚠DANGER

HAZARD OF ELECTRIC SHOCK, EXPLOSION, OR ARC FLASH

Leave the UPS system covered while making anchoring holes to prevent dust or other conductive particles from entering the system.

Failure to follow these instructions will result in death or serious injury.

1. Use the rear anchoring bracket that was attached to the rear of the I/O cabinet pallet. Fasten the two plates from the installation kit 0H-9101 to the rear anchoring bracket of the I/O cabinet with M8 bolts. Note the direction of the plates.

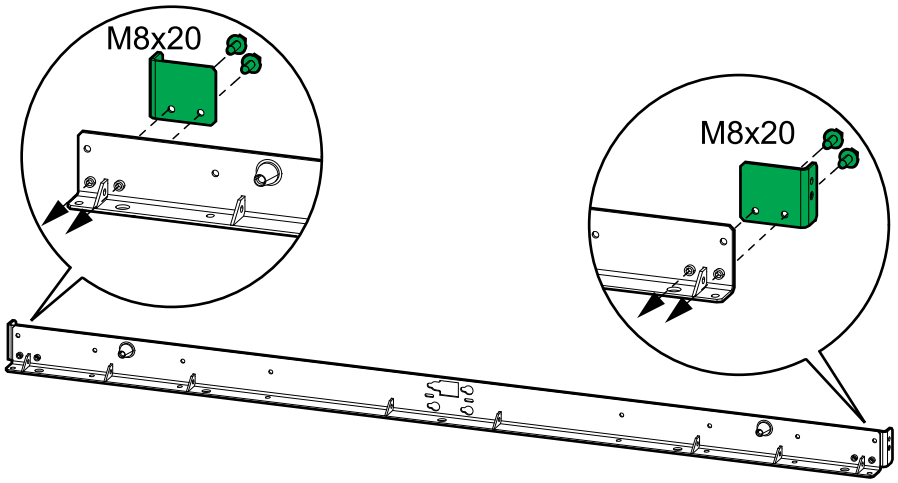

2. Place the rear anchoring brackets for the I/O cabinet and the power cabinets in the final installation area.

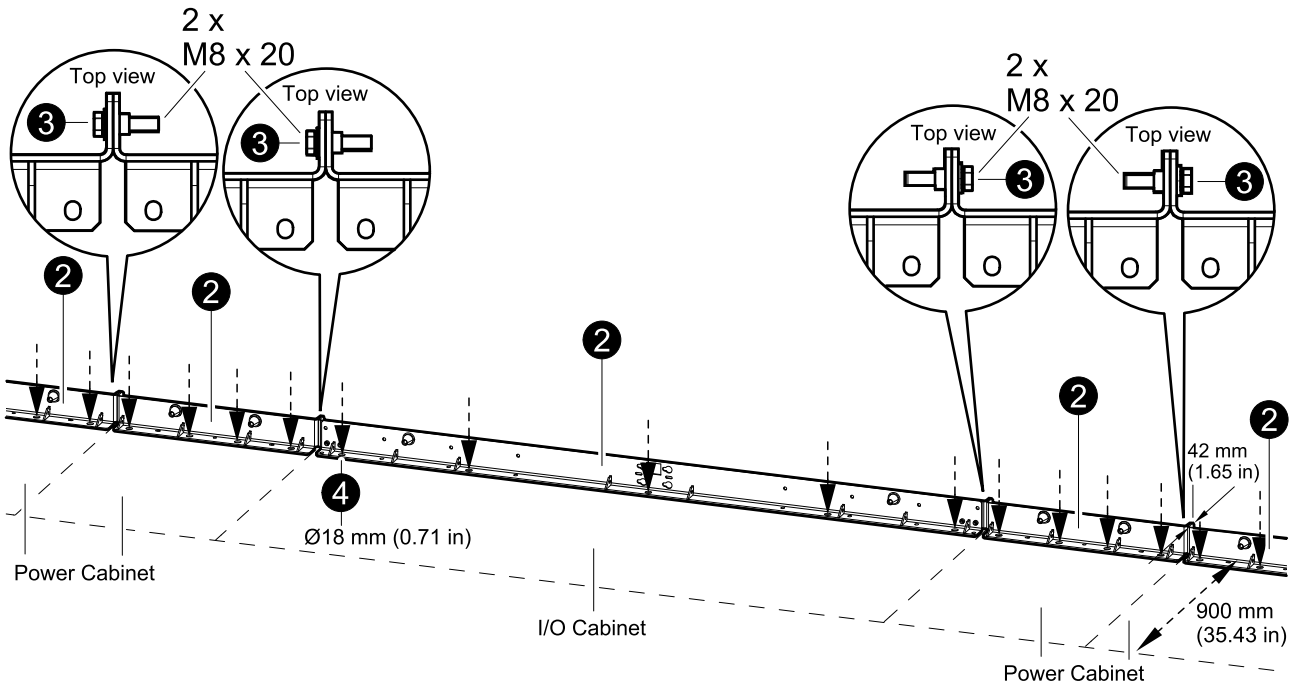

3. Interconnect the rear anchoring brackets using the provided screws and bolts.
4. Mark the hole locations.
5. Drill anchoring holes according to the national and local requirements.
6. Mount the rear anchoring brackets to the floor. Bolts are not supplied.
7. Use a bubble-leveler to ensure that the rear anchoring brackets are level. Use the provided leveling shims if necessary.

Position the Cabinets

⚠DANGER

HAZARD OF ELECTRIC SHOCK, EXPLOSION, OR ARC FLASH

Do not step/walk on top of the cabinets.

Failure to follow these instructions will result in death or serious injury.

NOTE: The cabinets must be moved to the final installation area individually and cannot be moved after they have been interconnected.

⚠DANGER

HAZARD OF ELECTRIC SHOCK, EXPLOSION, OR ARC FLASH

A minimum of one power cabinet and a maximum of four power cabinets must be placed on each side of the I/O cabinet.

Failure to follow these instructions will result in death or serious injury.

1. Install the cover 0M-98993 from the installation kit on the right-most power cabinet.

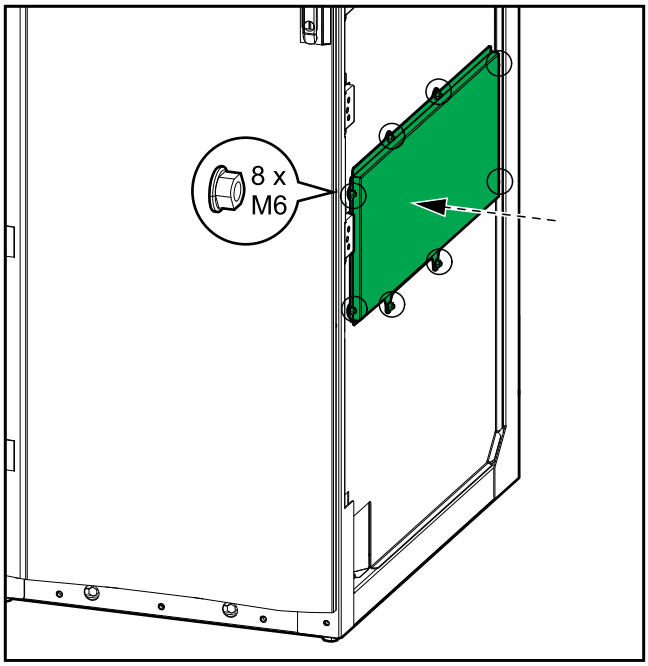

2. Install the interconnection cover 0M-82316 from the installation kit on the left-most power cabinet.

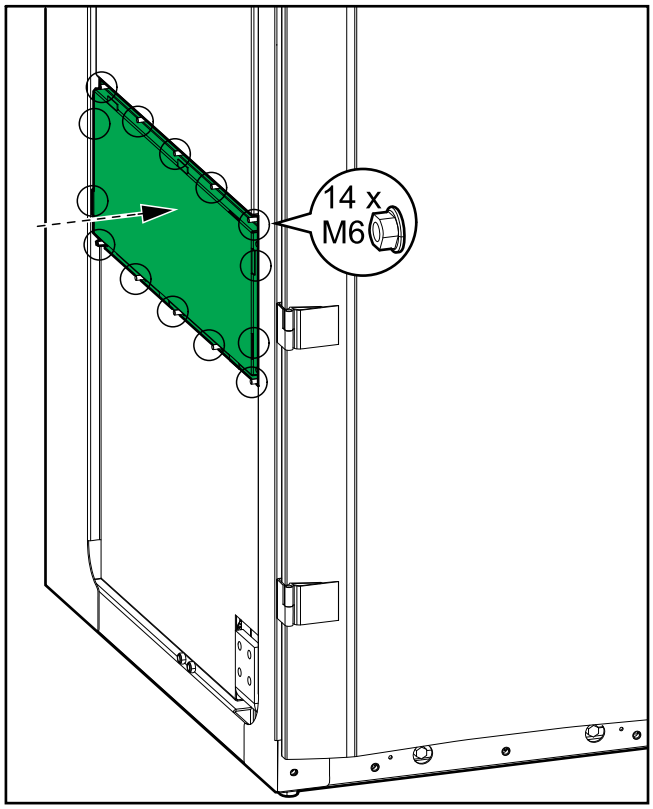

3. Remove the side panels from the I/O cabinet and install them on the left side of the left-most power cabinet and on the right side of the right-most power cabinet.

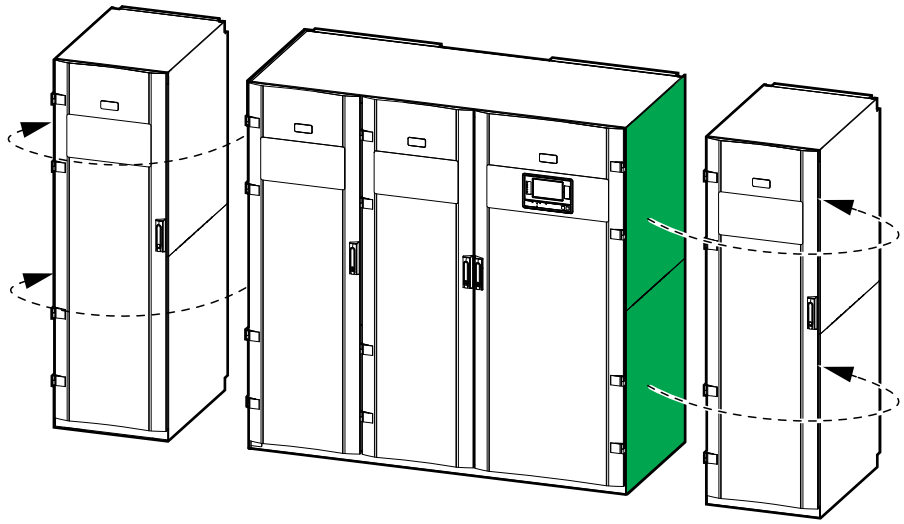

4. Remove and dispose of the indicated transport bracket from the left side of the I/O cabinet.

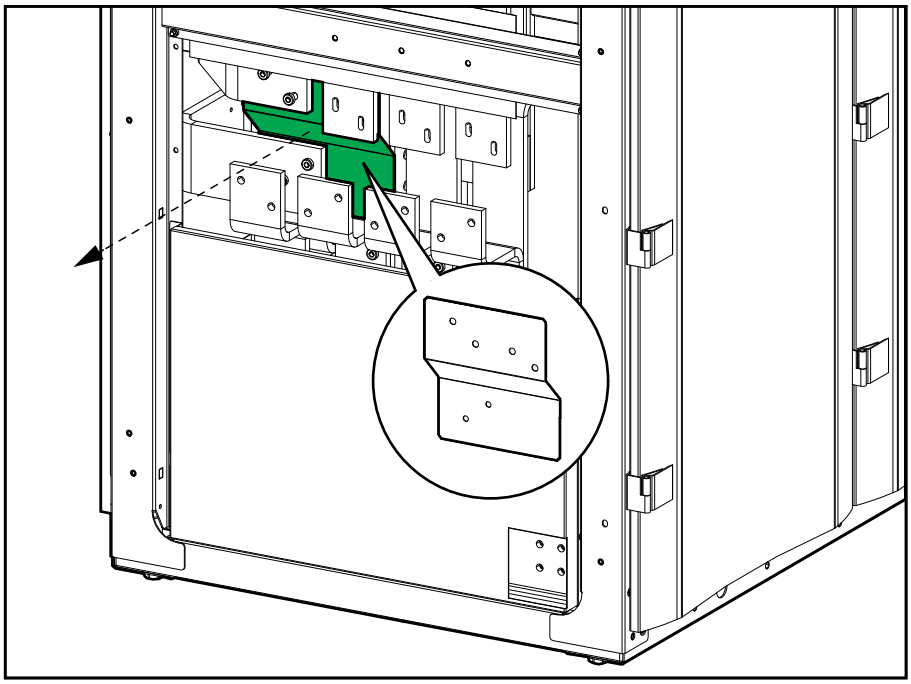

5. Remove and dispose of the indicated transport bracket from the right side of the I/O cabinet.

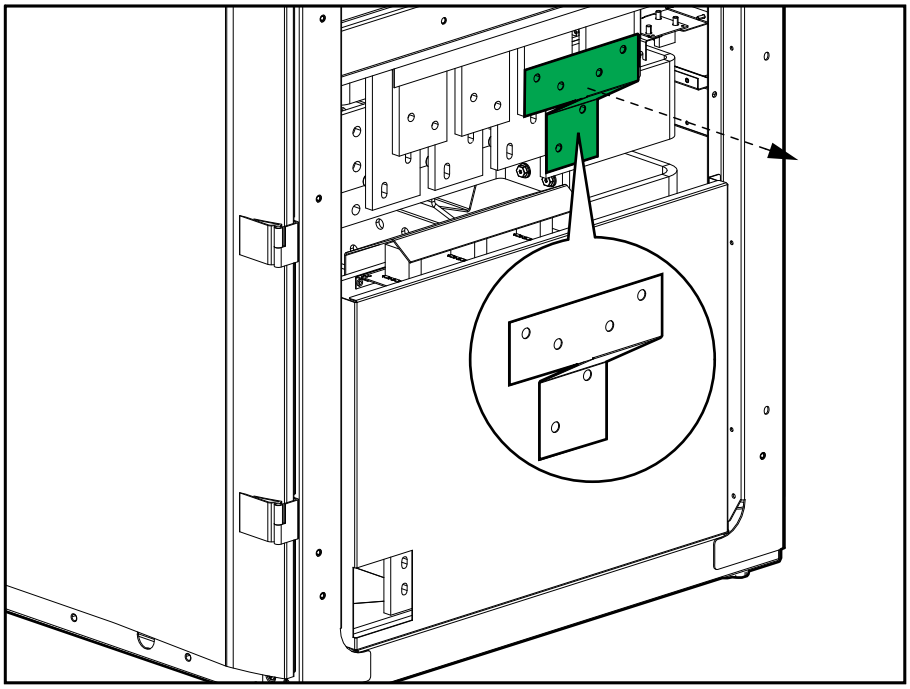

6. Remove and dispose of the indicated transport bracket from the right side of the I/O cabinet.

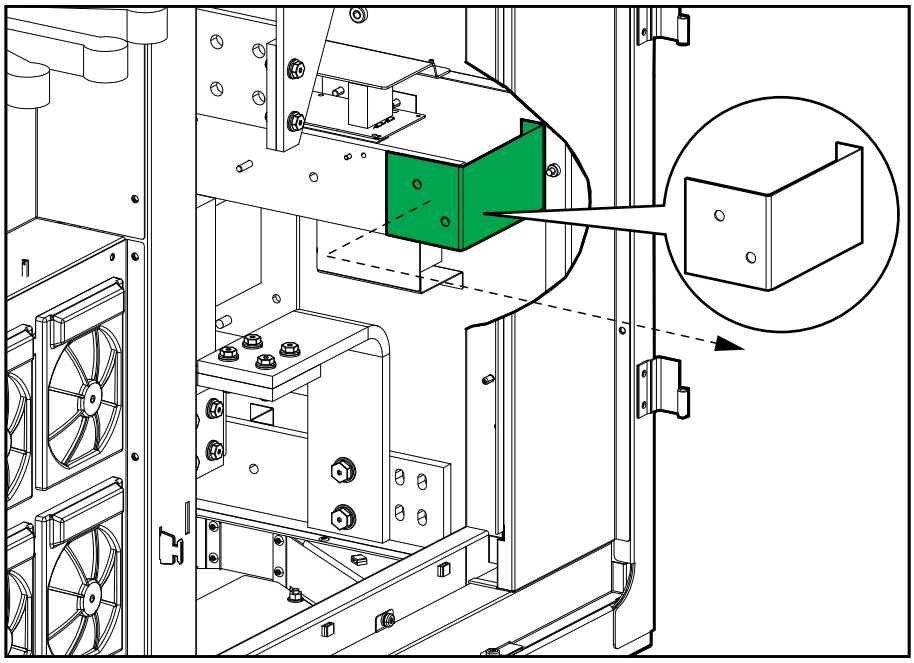

7. Remove the two metal plates from the I/O cabinet.

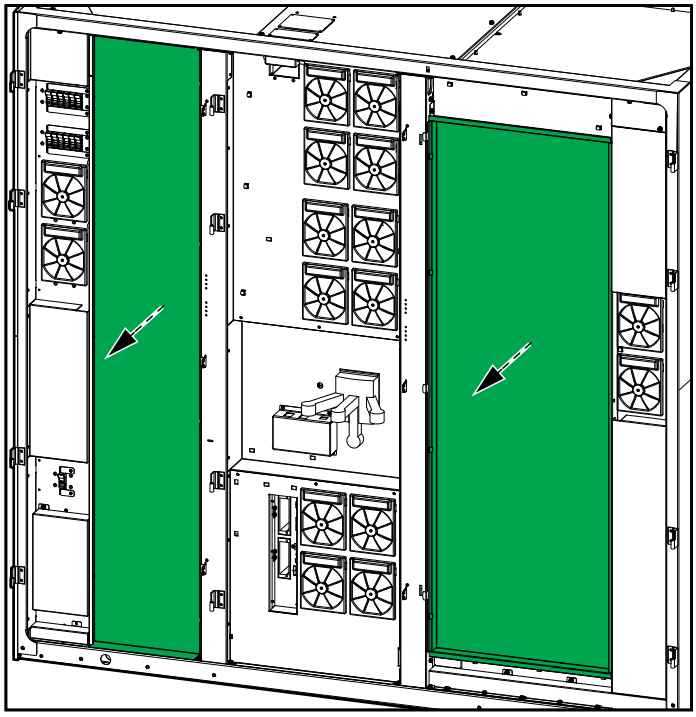

8. Push the I/O cabinet into position against the rear anchoring bracket – the I/O cabinet will connect to the conic outcroppings on the rear anchoring bracket.

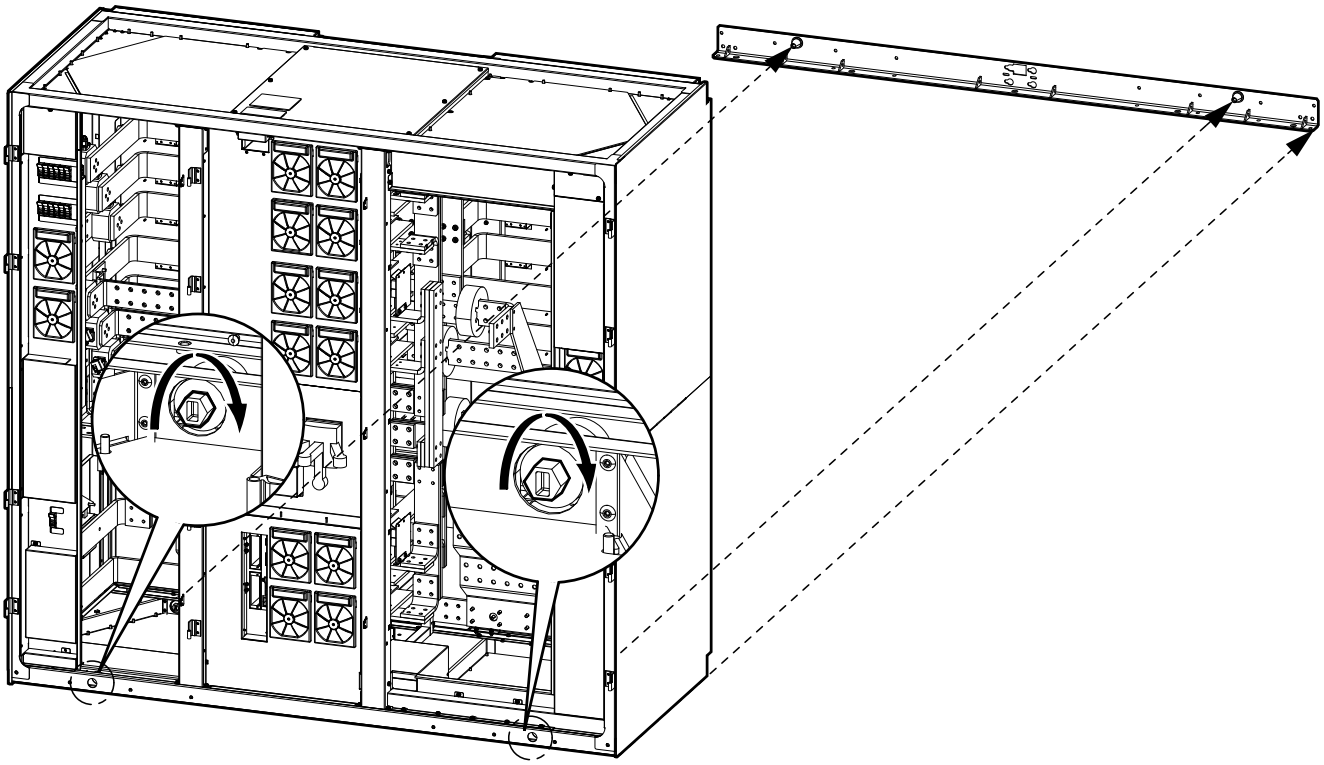

9. Fasten the cabinet to the rear anchoring bracket by tightening the bolts. Torque to 50 Nm (36.87 lb-ft).

10. Push the power cabinets one by one into position against the rear anchoring brackets – the cabinets will connect to the conic outcroppings on the brackets.

⚠CAUTION

RISK OF EQUIPMENT DAMAGE

When pushing the power cabinet into position, push on the frame to avoid damaging the signal cables.

Failure to follow these instructions can result in injury or equipment damage.

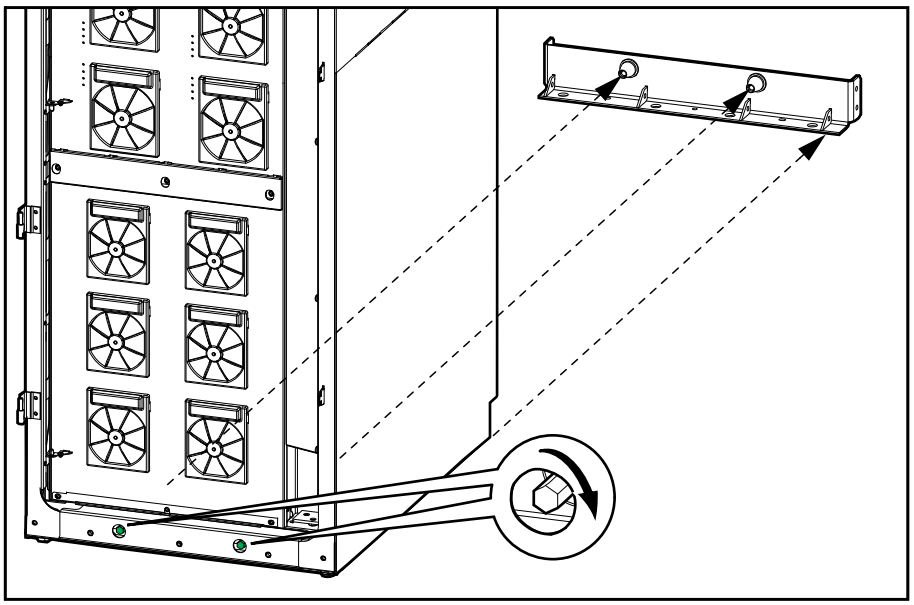

11. Fasten the cabinets to the rear anchoring brackets by tightening the bolts on the front of the cabinets. Torque to 50 Nm (36.87 lb-ft).
12. Lower the two front feet on all cabinets until they connect with the floor – use a bubble-leveler to ensure that the cabinets are level. Use the provided levelling shims if necessary.
13. Install the top baying brackets on the top of the cabinets and fasten with the provided screws.

Front View of the I/O Cabinet and Two Power Cabinets

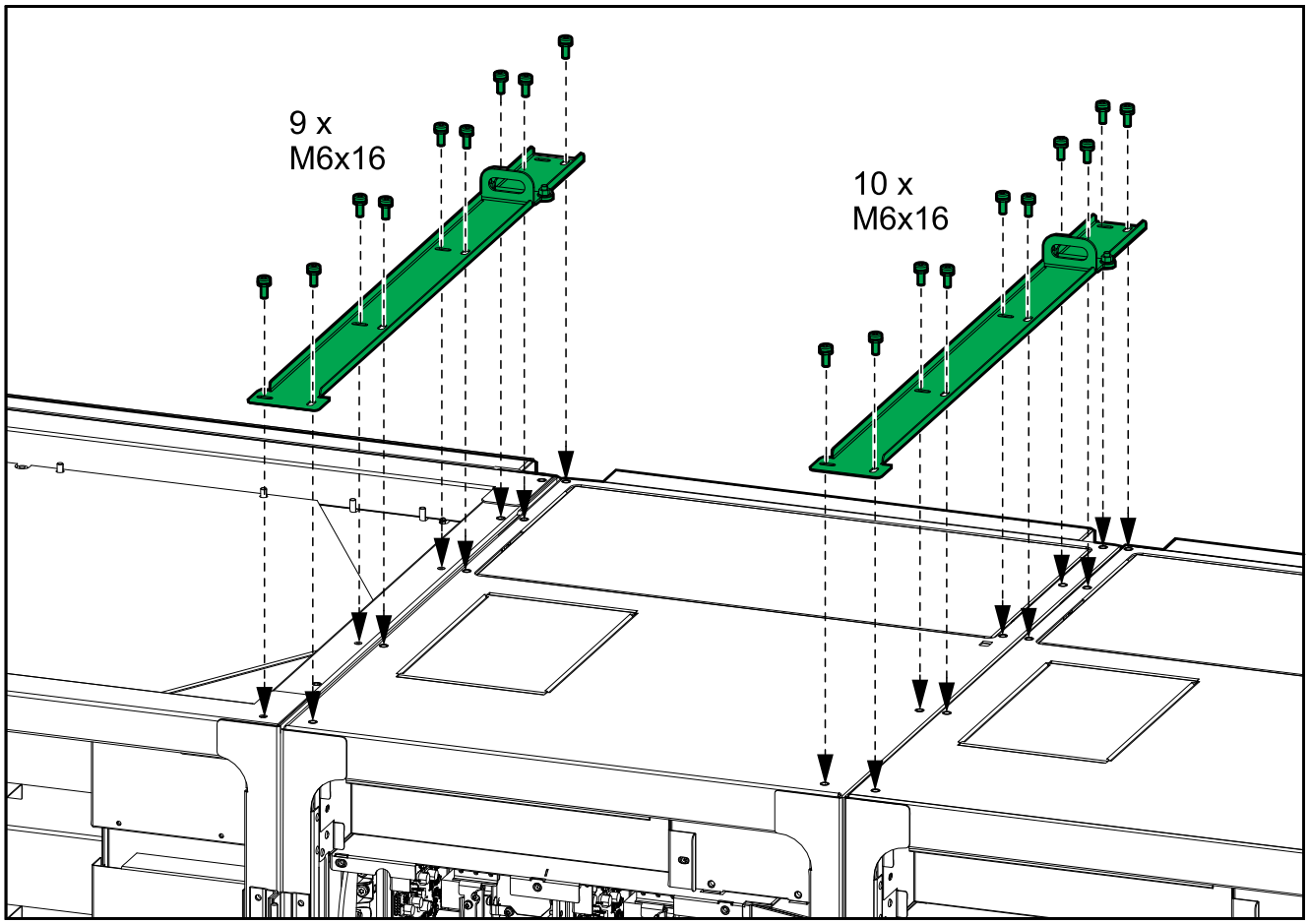

14. Remove the three indicated plates in the left side of the I/O cabinet.

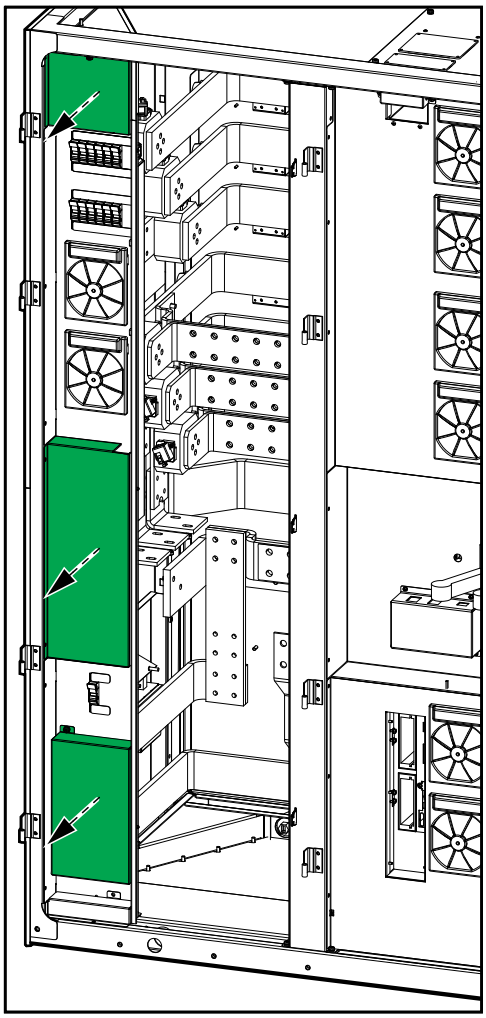

15. Remove the two indicated plates in the left side of the I/O cabinet.

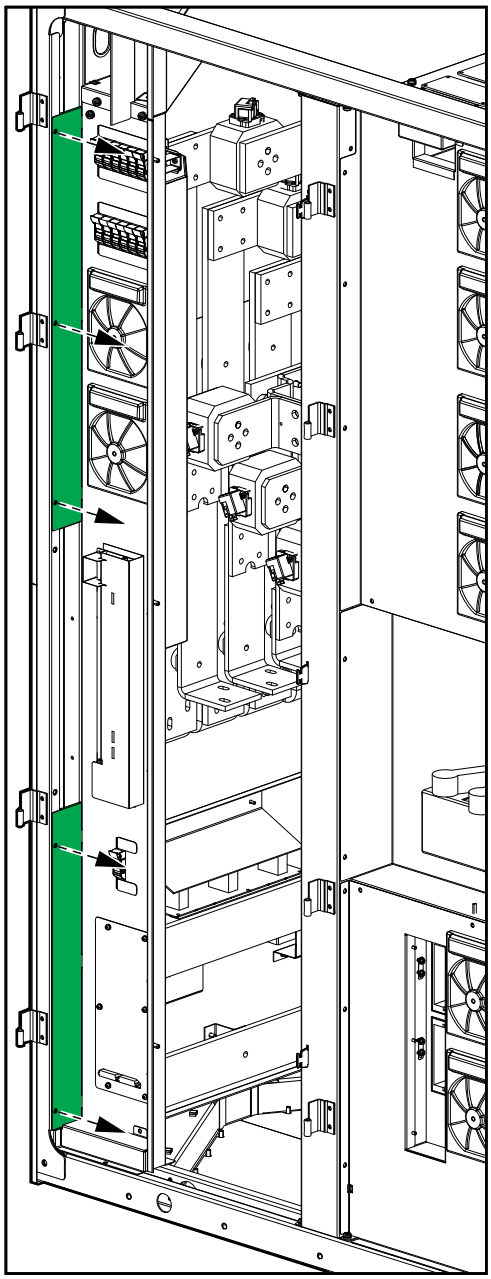

16. Mount the M6 screws from the installation kit from right to left in the four marked locations between the I/O cabinet and the power cabinet placed to the left of the I/O cabinet.

From the Power Cabinet on the Left Side of the I/O Cabinet to the I/O Cabinet

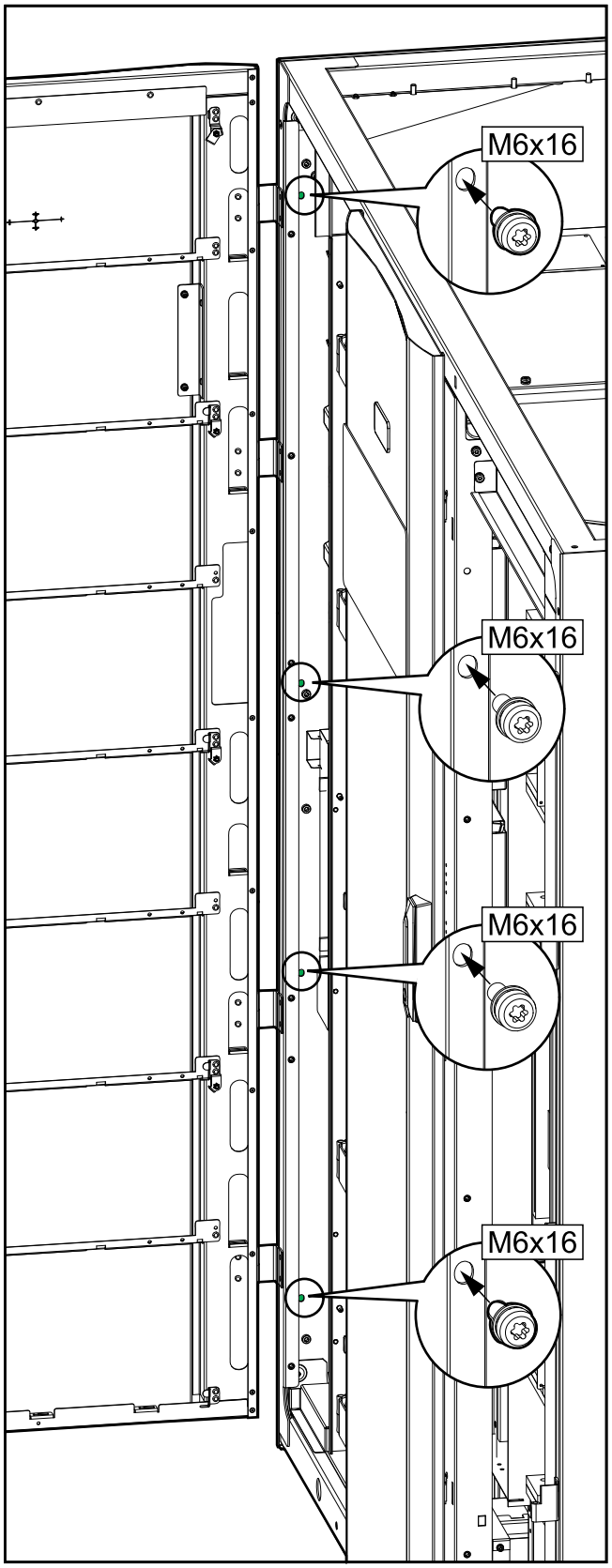

17. Mount the M6 screws from the installation kit from right to left to tighten the cabinets together:
    - in the five marked positions between the power cabinets.
    - in the four marked positions between the I/O cabinet and the power cabinet on the right side of the I/O cabinet.

From Power Cabinet to Power Cabinet

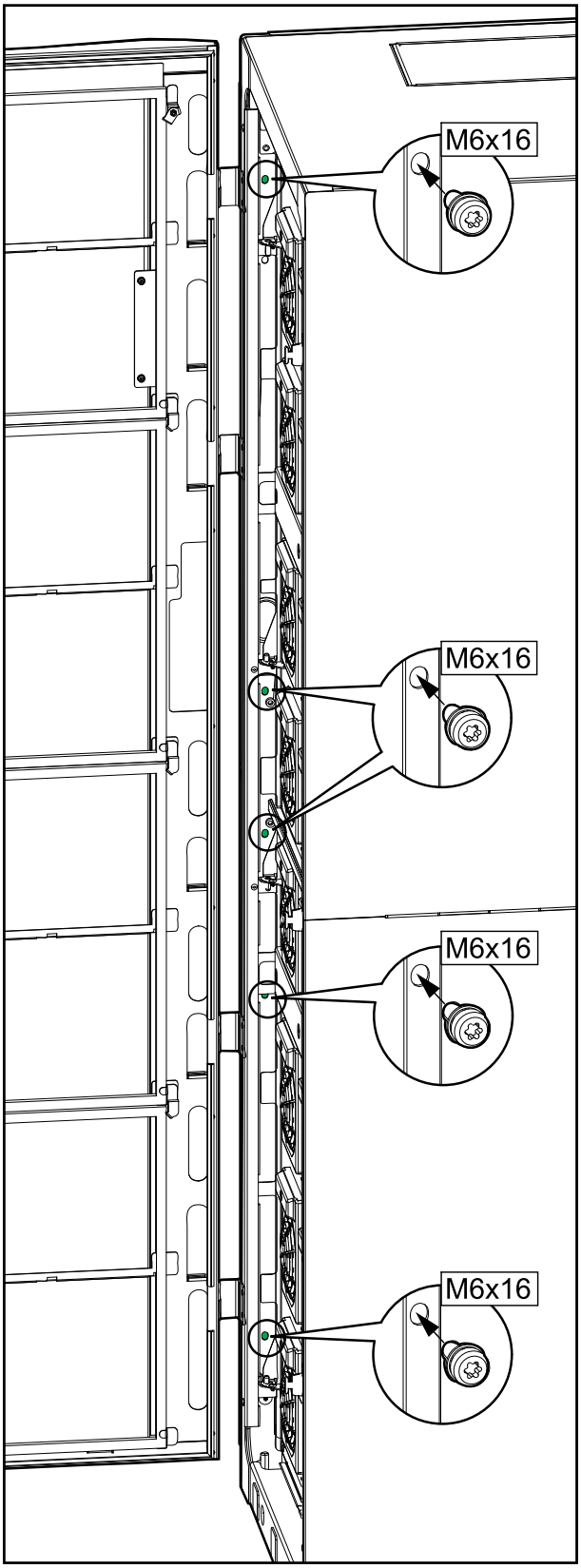

From Power Cabinet on the Right Side of the I/O Cabinet to the I/O Cabinet

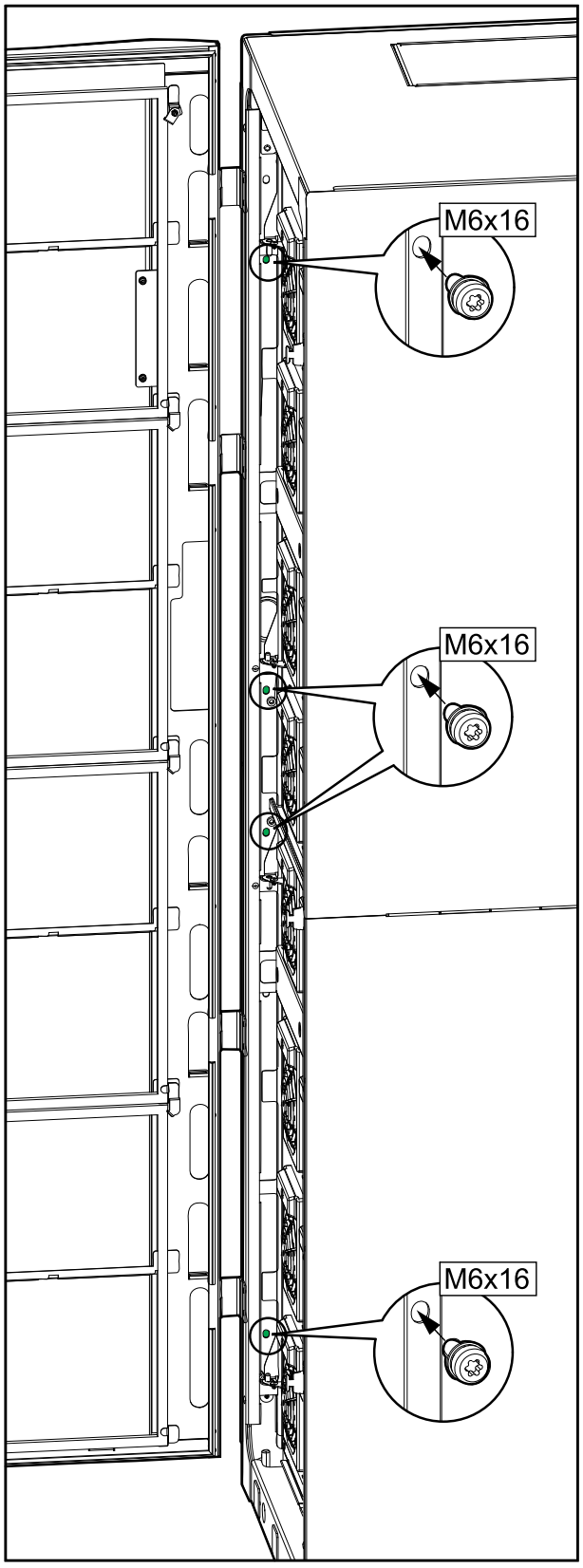

Connect the Power Cables

Prepare the I/O Cabinet for Power Cables in Top Cable Entry Systems

⚠DANGER

HAZARD OF ELECTRIC SHOCK, EXPLOSION, OR ARC FLASH

Do not drill/punch holes for cables or conduits with the gland plates installed and do not drill/punch holes in close proximity to the UPS.

Failure to follow these instructions will result in death or serious injury.

1. Loosen the bolts and remove the gland plates from the top of the I/O cabinet.

Front View of the I/O Cabinet

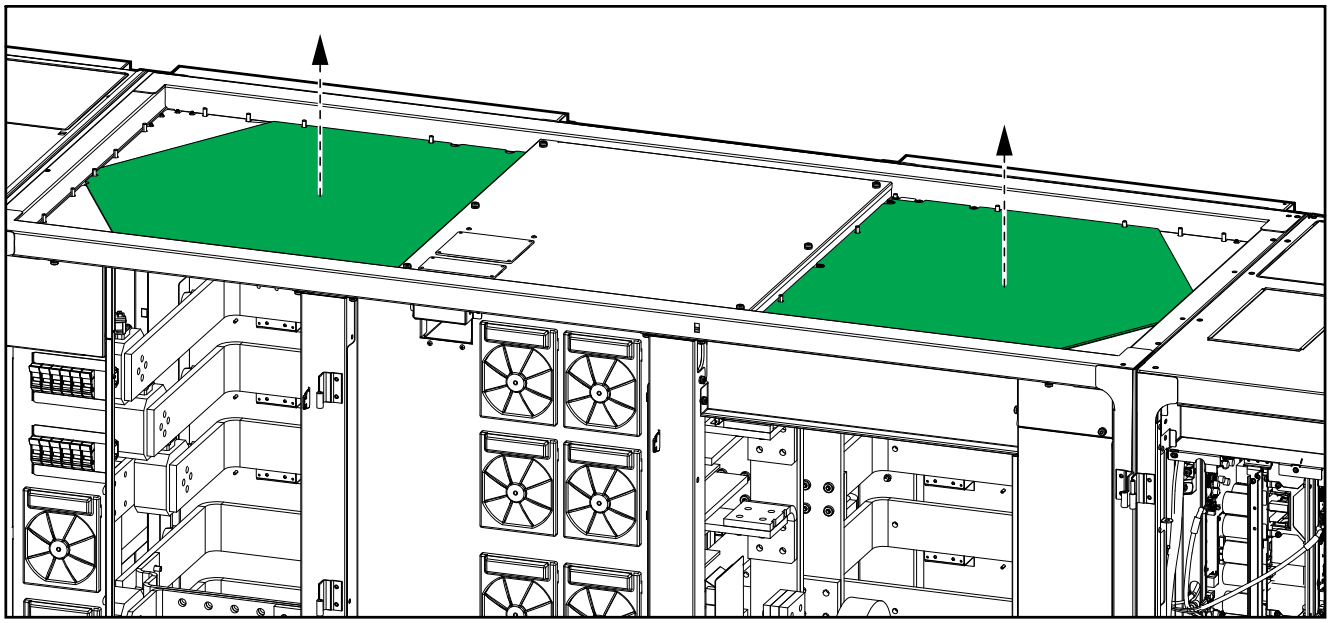

2. Drill or cut holes for cables/conduits in the top gland plate.
3. Install conduits and reinstall the top gland plate.

⚠DANGER

HAZARD OF ELECTRIC SHOCK, EXPLOSION, OR ARC FLASH

Ensure that there are no sharp edges that can damage the cables.

Failure to follow these instructions will result in death or serious injury.

Prepare the I/O Cabinet for Power Cables in Bottom Cable Entry Systems

⚠DANGER

HAZARD OF ELECTRIC SHOCK, EXPLOSION, OR ARC FLASH

Do not drill/punch holes for cables or conduits with the gland plates installed and do not drill/punch holes in close proximity to the UPS.

Failure to follow these instructions will result in death or serious injury.

1. Loosen the bolts and remove the gland plates in the bottom of the I/O cabinet.

Front View of the I/O Cabinet

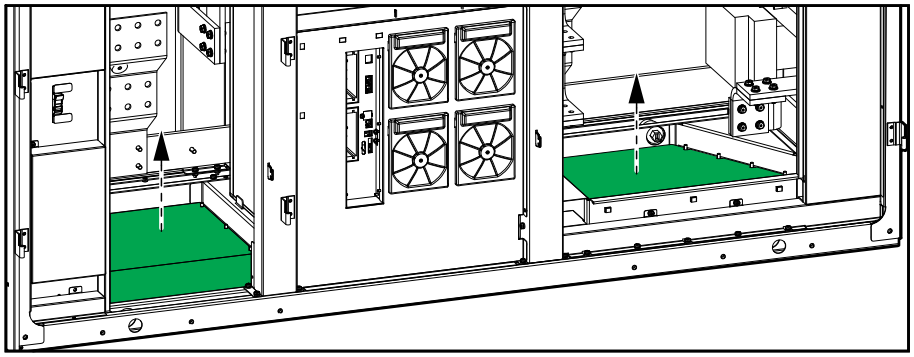

2. Drill or cut holes for cables/conduits in the bottom gland plate.
3. Install conduits and reinstall the bottom gland plate.

⚠DANGER

HAZARD OF ELECTRIC SHOCK, EXPLOSION, OR ARC FLASH

Ensure that there are no sharp edges that can damage the cables.

Failure to follow these instructions will result in death or serious injury.

Install the Single Utility/Mains Installation Kit 0H-9161

NOTE: This procedure is only applicable to single utility/mains systems.

1. Install the single utility/mains installation kit 0H-9161 between the input and bypass busbars. Connect L1 to L1, L2 to L2, and L3 to L3.

   NOTE: Two busbars are required for each connection.

Front View of the I/O Cabinet

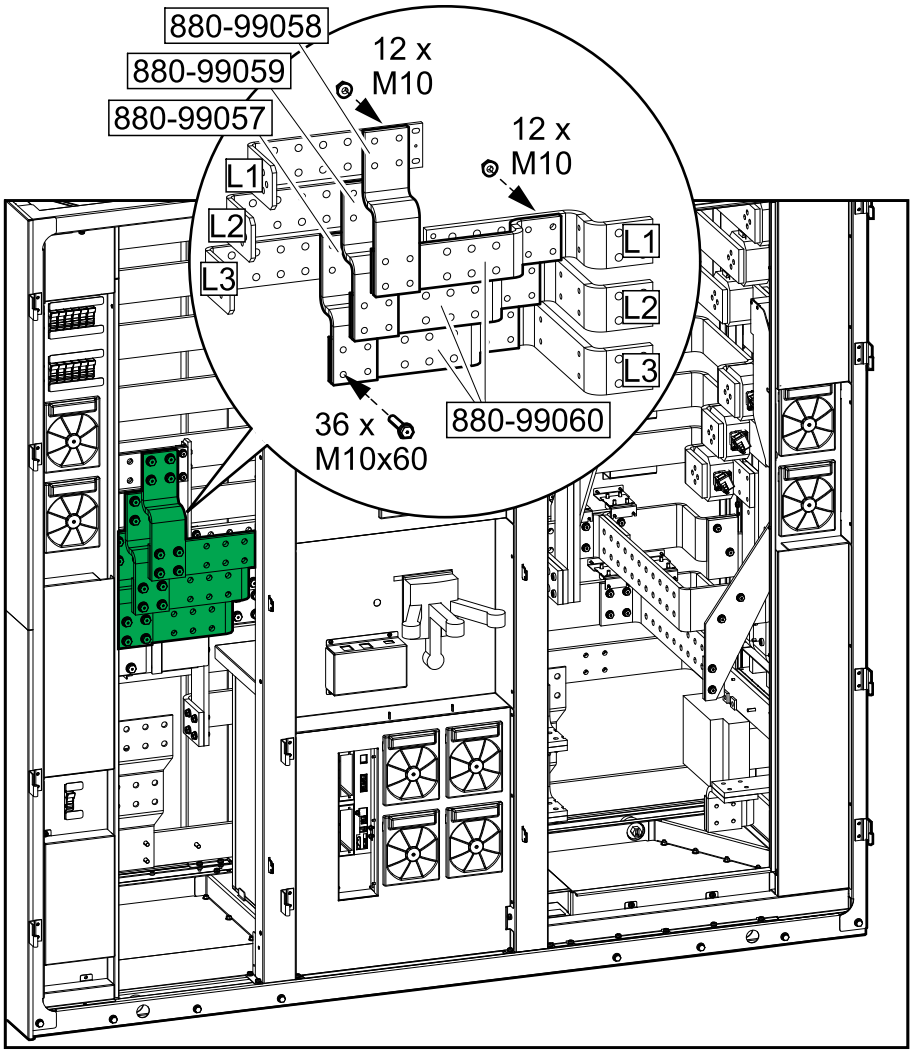

Connect the Power Cables in a 380 V, 400 V, 415, and 440 V System

1. Install the N busbar 880–5501 from the installation kit 0H-1102.

Front View of the I/O Cabinet

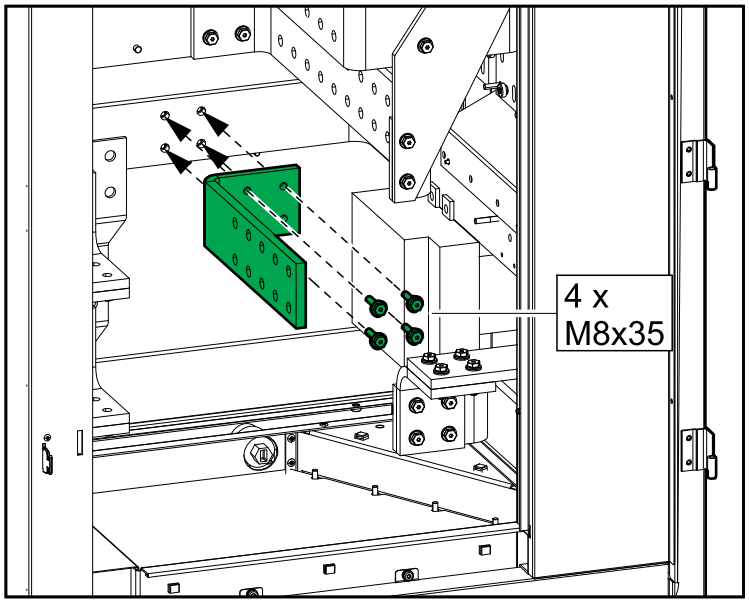

2. In installations with neutral connection only, remove the lexan plate from the N busbar.

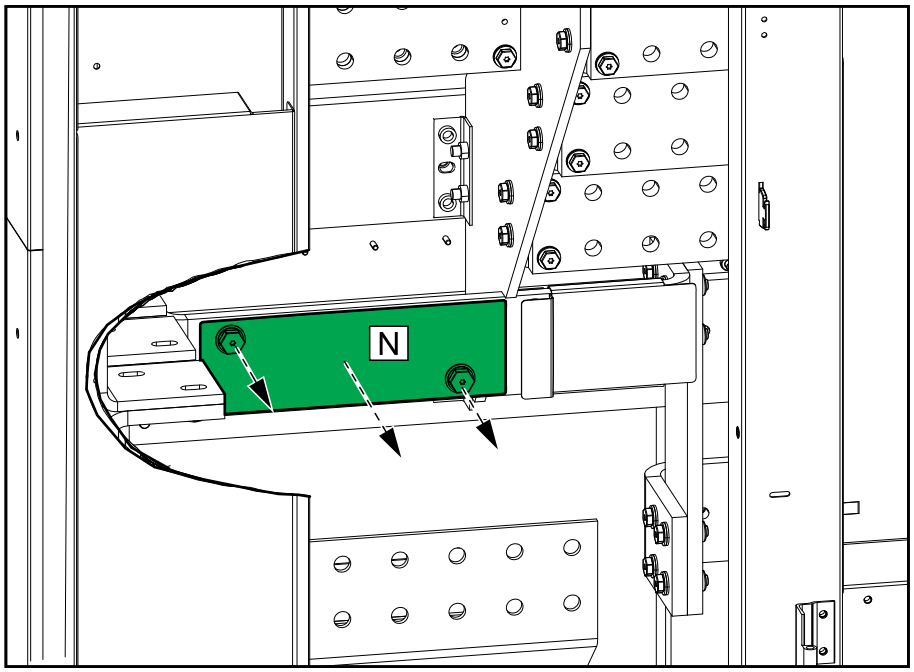

3. Connect the equipment earthing conductor/PE to the PE busbar.

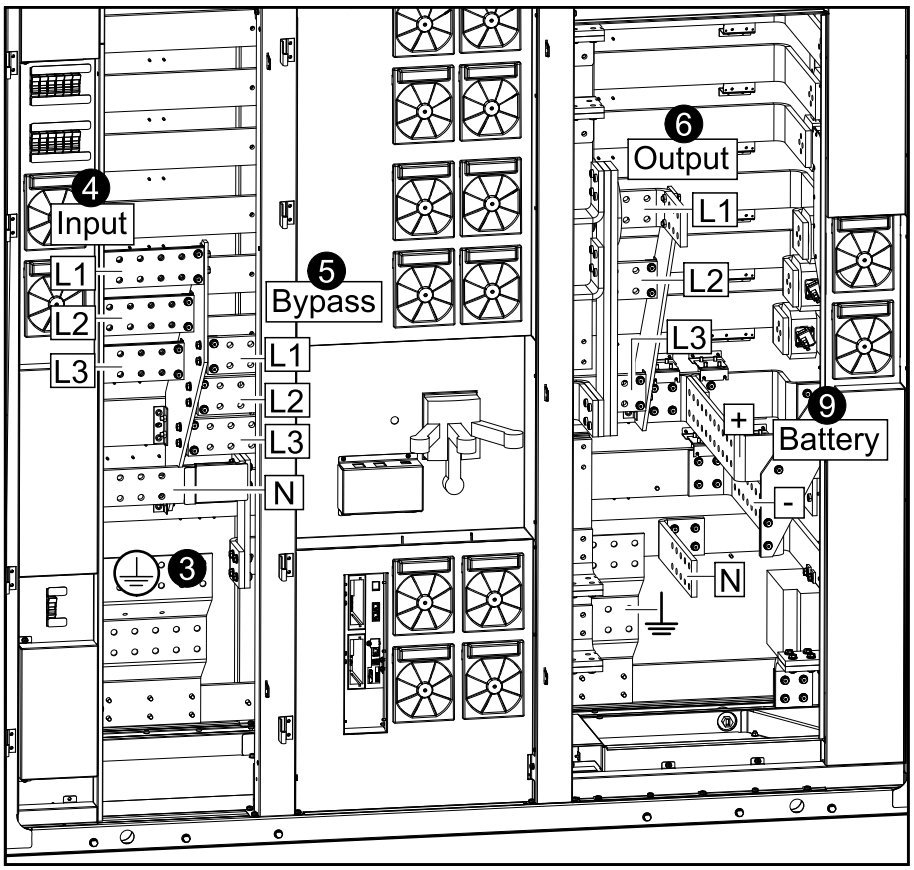

4. Connect the input cables.
5. Only applicable to dual mains systems: Connect the bypass cables.
6. Connect the output cables.
7. Only applicable to TNC systems: Install jumper cables (not provided) between the N busbar and the earthing terminal.

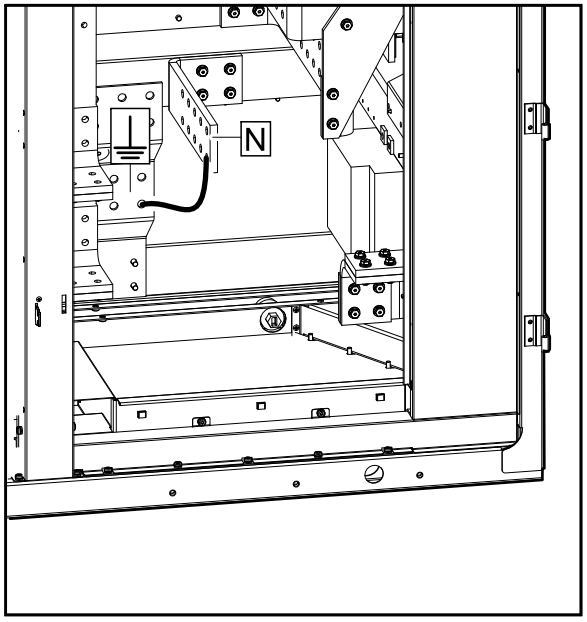

8. Only applicable to 4–wire systems: In an IT system, connect an external impedance between the N busbar and the earthing terminal.

   NOTE: For IT systems, the installation must include a earth-fault detection circuitry.

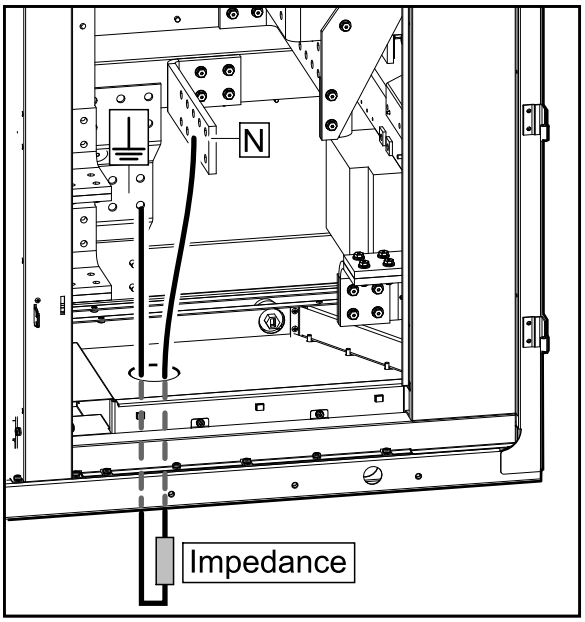

9. Connect the battery cables to the battery + and battery – terminals.

Connect the Power Cables in a 480 V System

The grounding electrode conductor must be installed per NEC 250.30 and sized per NEC 250.66.

1. Connect the equipment grounding conductor/PE to the PE busbar.

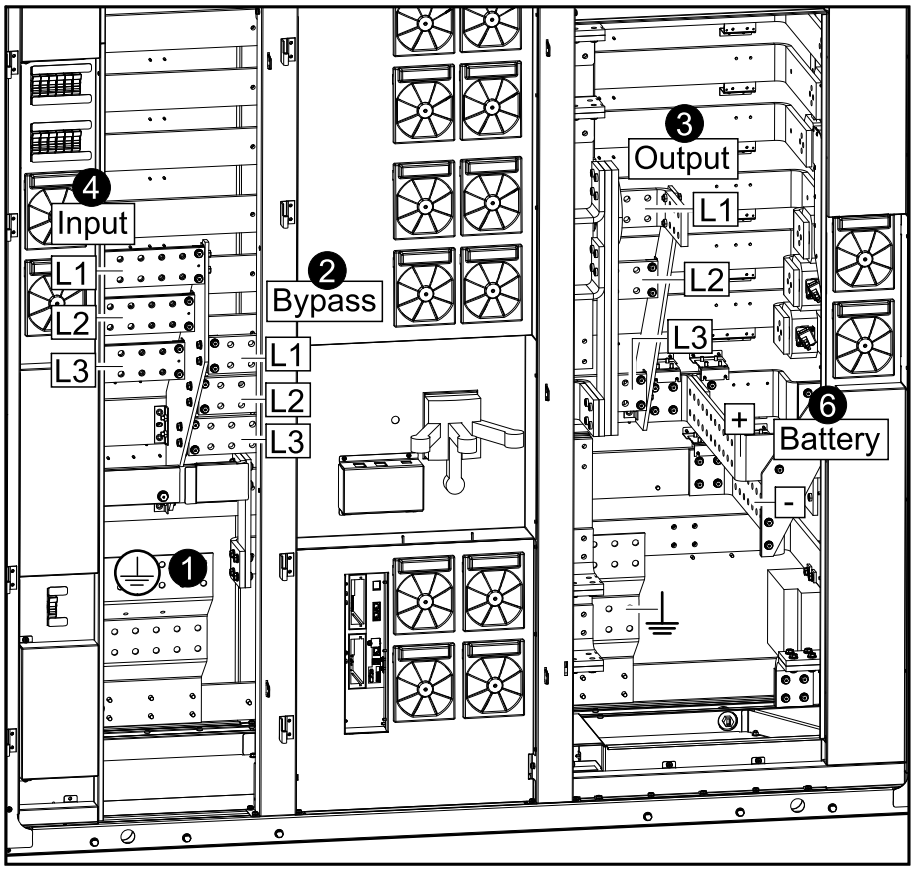

2. Only applicable to dual mains systems: Connect the bypass cables.
3. Connect the output cables.
4. Connect the input cables.
5. For high impedance grounding systems only:

   NOTE: For high impedance grounding systems, the installation must include a ground-fault detection circuitry.

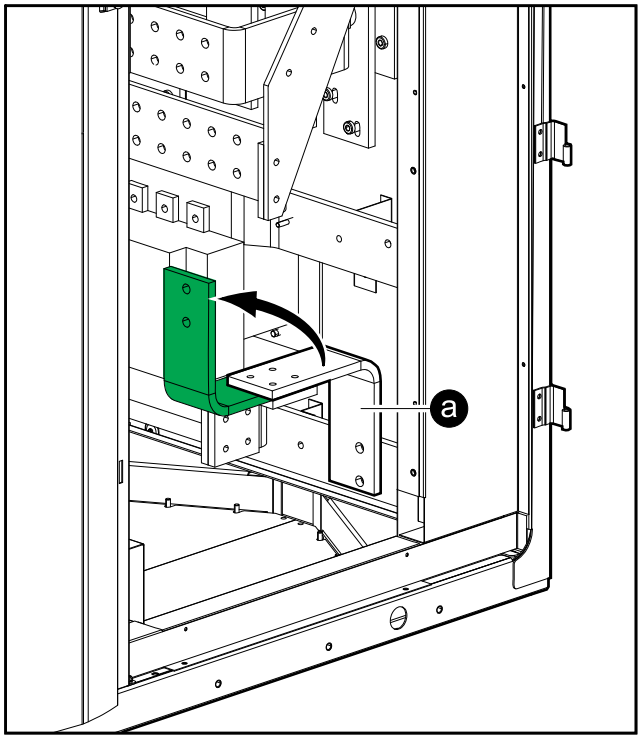

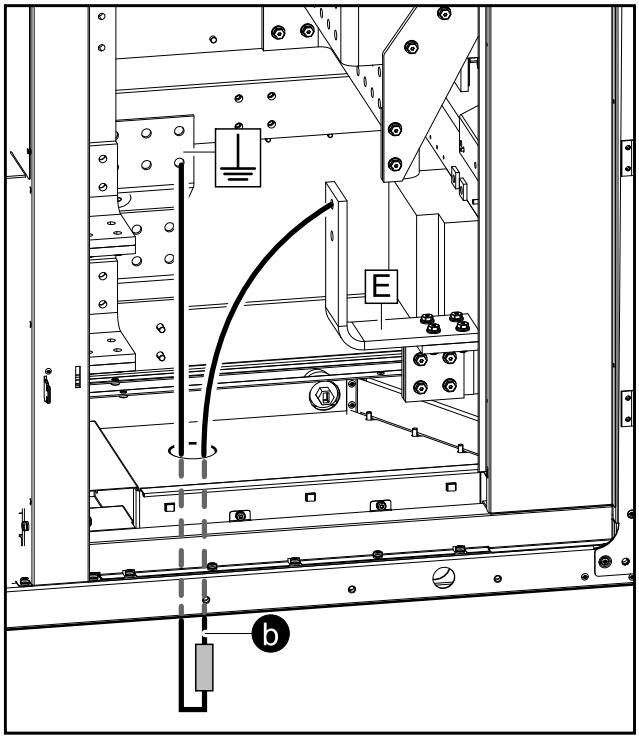

   a. Rotate the jumper busbar so it does not create a connection.

   b. Connect an external impedance between the “E” terminal and the equipment grounding conductor according to NEC 2014 article 250.36.

6. Connect the battery cables to the battery + and battery – terminals.

Mount the Front Anchoring Brackets

1. Fasten the front anchoring brackets to the front of the cabinets using the provided bolts.

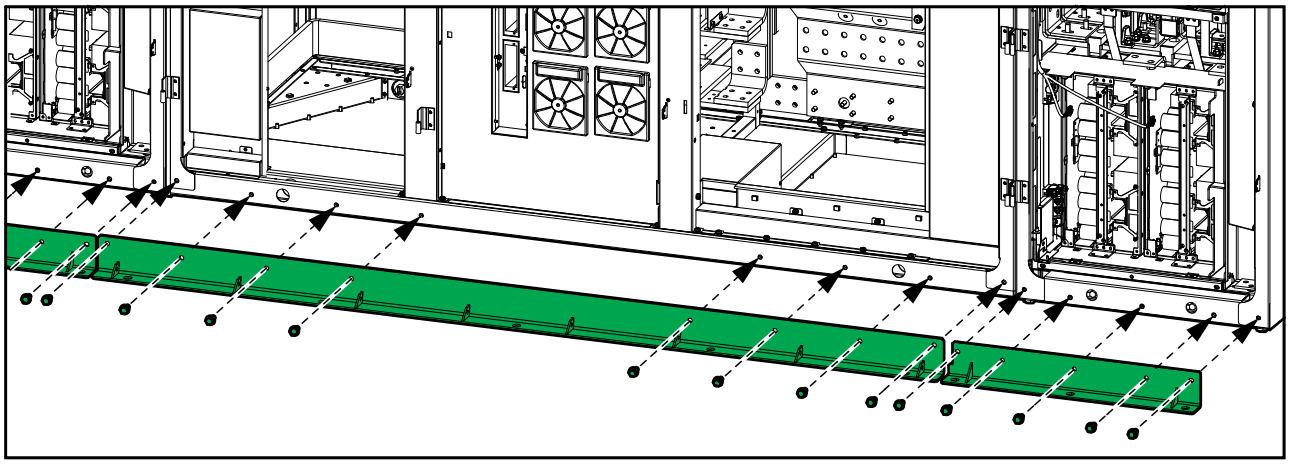

2. Anchor the front anchoring brackets to the floor.

   NOTE: Floor anchoring bolts are not supplied.

Signal Cables

Route the Signal Cables between the I/O Cabinet and the Power Cabinets

NOTE: Do not connect the signal cables. Signal cables will be connected by Schneider Electric during the assembly service.

Overview of Signal Cables between the Power Cabinets and the I/O Cabinet

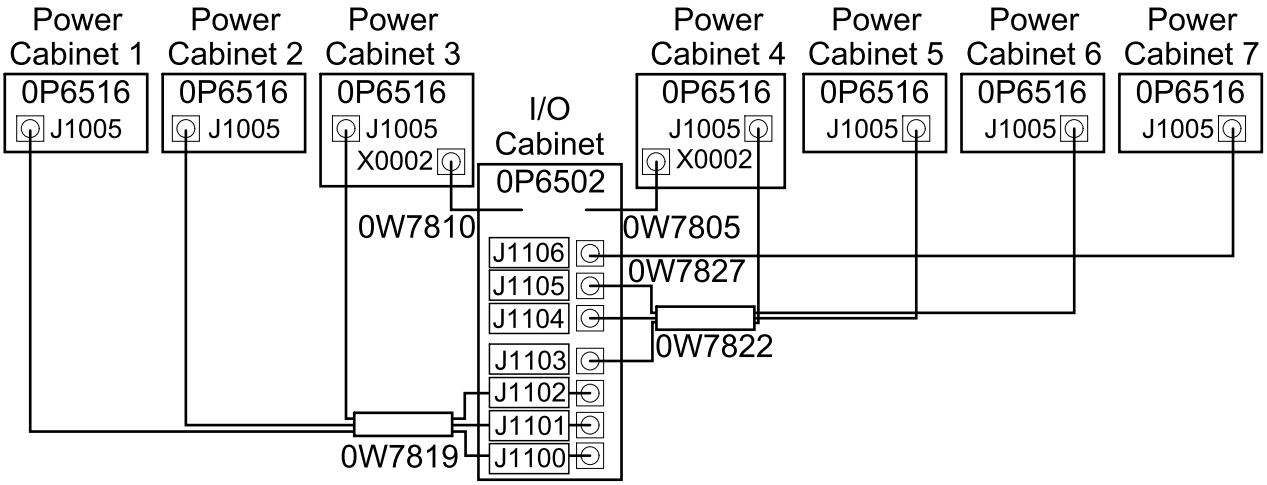

1. Remove the plate in the upper right corner of the I/O cabinet.

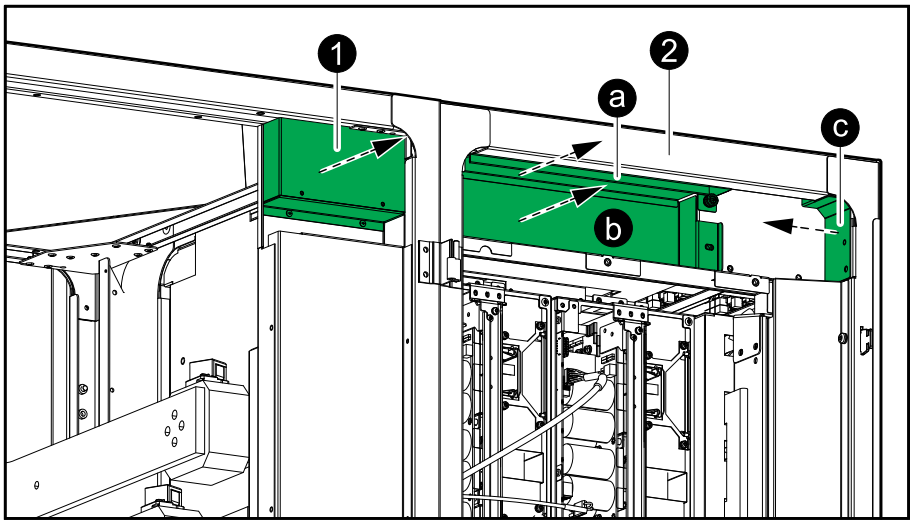

2. Remove the three plates (a-c) on all power cabinets.
3. Remove and dispose of all 0W11379 signal cables connected to the X0002 terminals of all power cabinets.

4. Route the signal cable connected in the left side of the I/O cabinet to the X0002 terminal in the power cabinet to the left of the I/O cabinet.

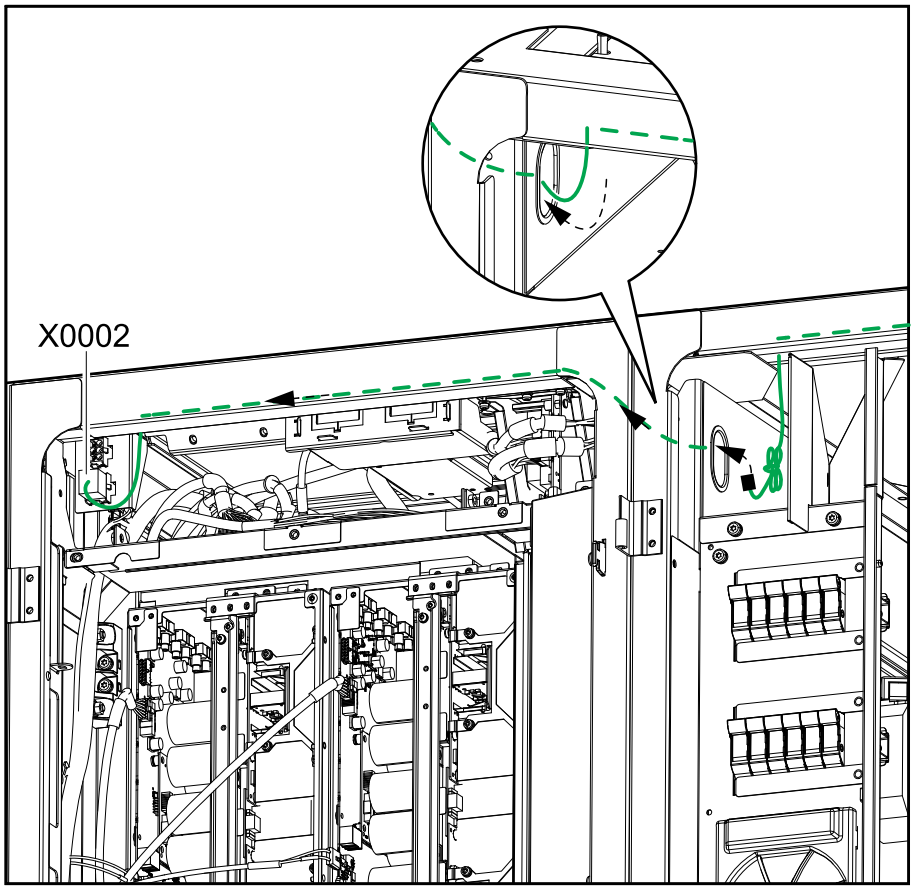

5. Route the signal cable connected in the right side of the I/O cabinet to the X0002 terminal in the power cabinet to the right of the I/O cabinet.

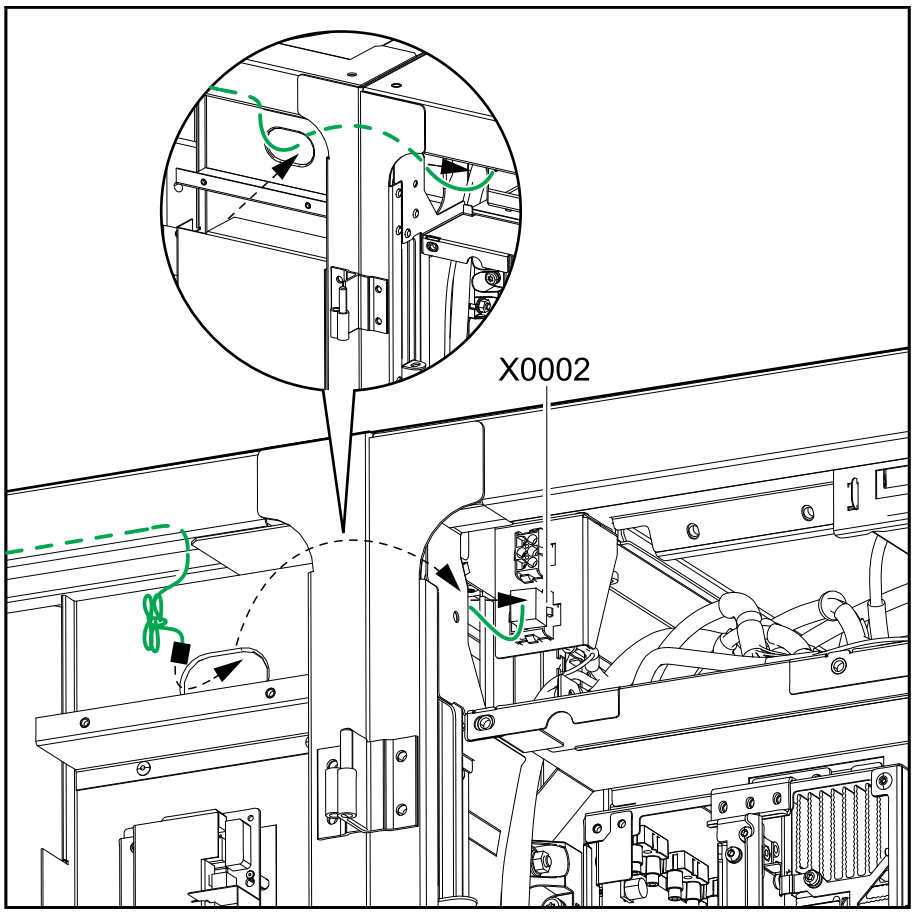

6. Route the signal cable 0W7819 from 0P6516 terminal J1005 in power cabinets 1–3 (on the left side of the I/O cabinet) and into the I/O cabinet as shown on the illustration and fasten the cable.

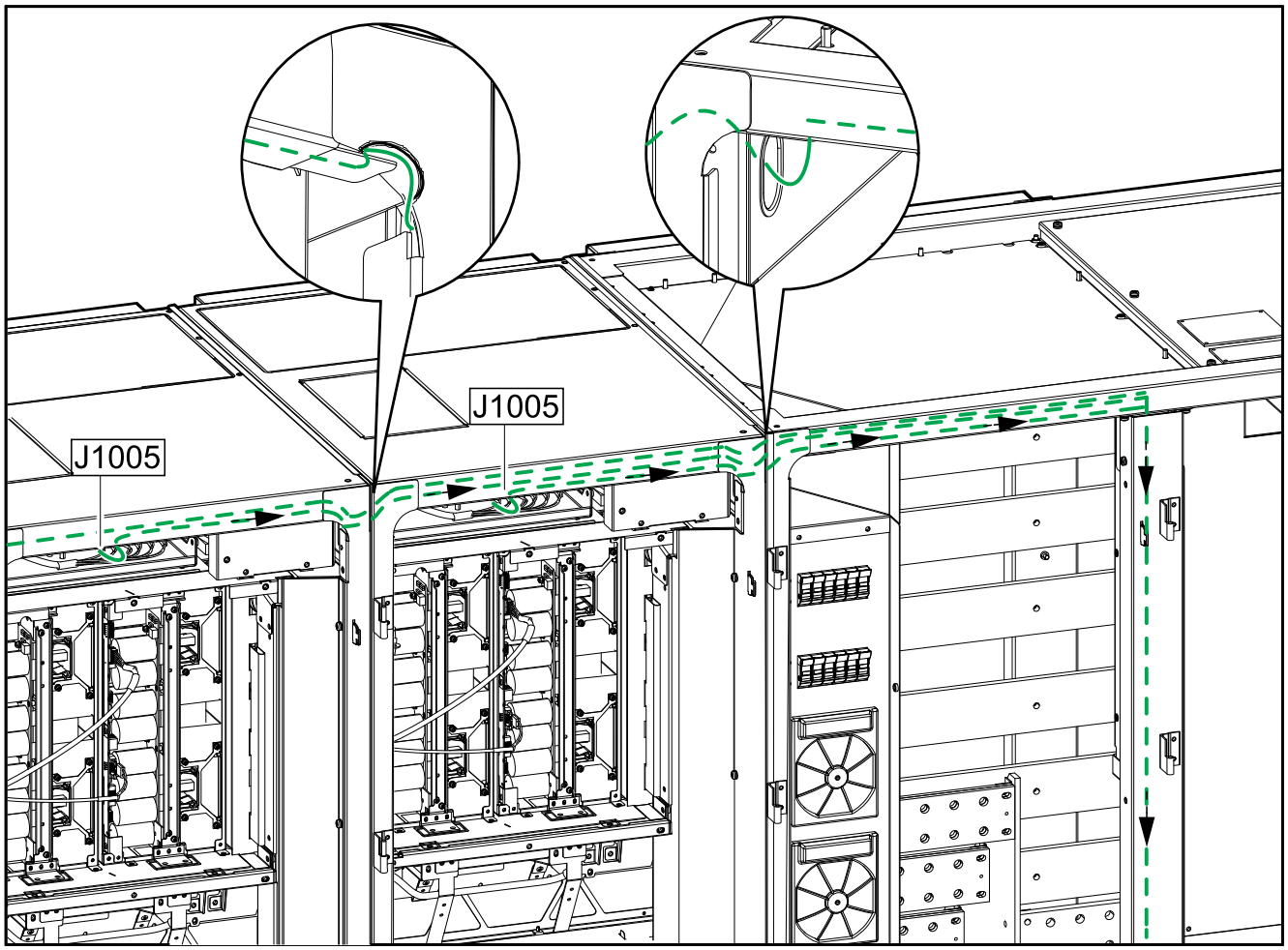

7. Route the signal cable 0W7822 from 0P6516 terminal J1005 in power cabinet 4 and power cabinets 5–6 if available (on the right side of the I/O cabinet) and into the I/O cabinet as shown on the illustration and fasten the cable.

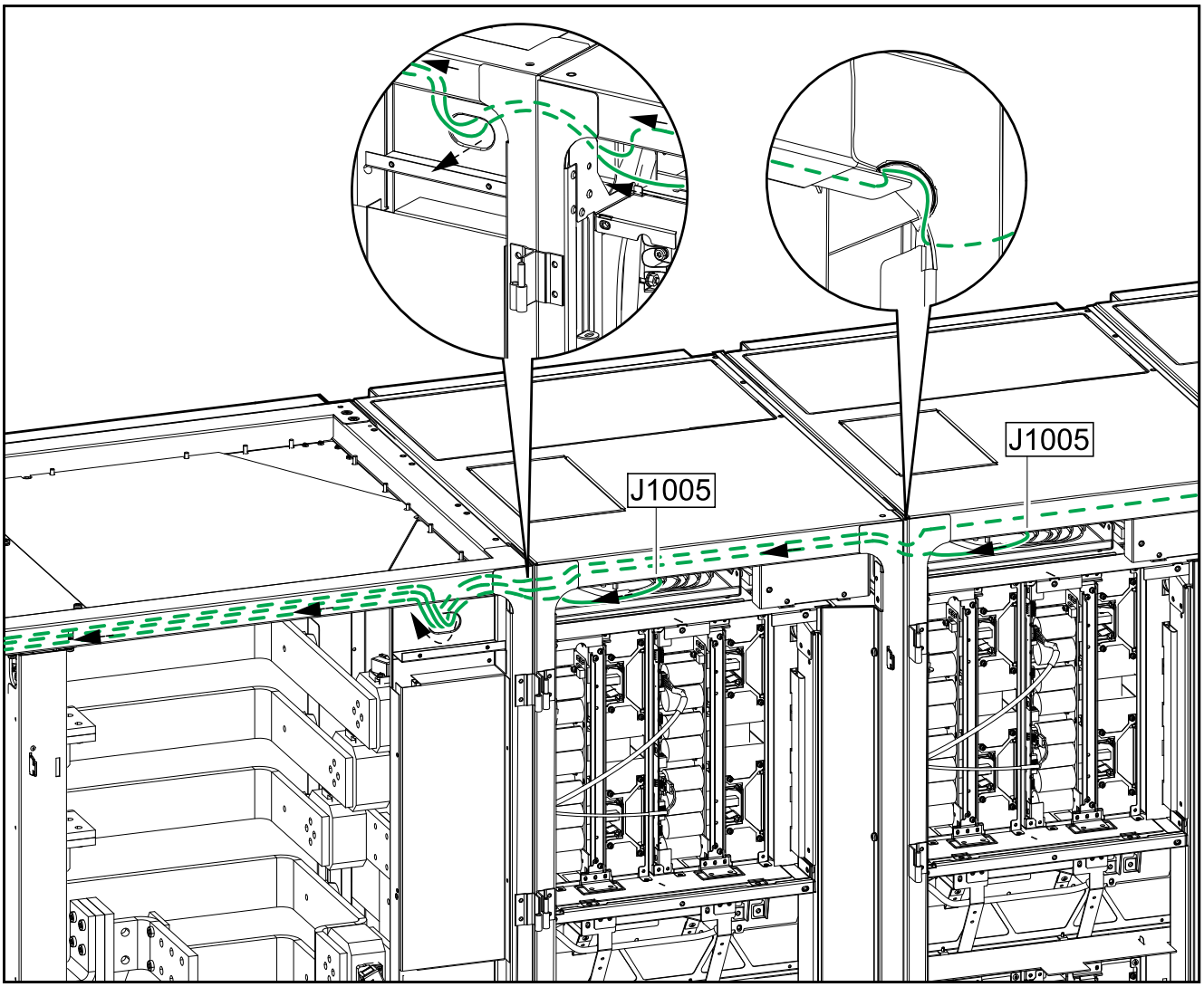

8. In redundant systems only, route the signal cable 0W7827 from 0P6516 terminal J1005 in power cabinet 7 and into the I/O cabinet and fasten the cable.

Prepare for External Signal Cables

Class 2/SELV

Board	Terminal	Description	See
0P6548	J5502–J5506, J5508, J5510–J5512	Input contacts	Connect Equipment to Input Contacts and Output Relays, page 75
0P6548	J5520–J5525, J5528	Output relays	
0P6548	J5527	Kirk key control	Signal Cable Connections to the Switchgear (Boards 0P6547, 0P6548, 0P6549), page 69
0P6548	J5514	UOB lamp contol	
0P6548	J5515	MBB lamp control	
0P6548	J5516	SIB lamp control	
0P6548	J5517	SSIB lamp control	
0P6548	J5509	UOB 2	
0P6547	J4931–J4932	24 V SELV supply	

Class 2/SELV (Continued)

Board	Terminal	Description	See
0P6547	J4936–J4938	EPO	Connect the Emergency Power Off (EPO), page 72
0P3643	PBUS 1 and PBUS 2	PBUS	Route the PBUS Cables between Parallel UPS Units, page 77
0P6502		Modbus	Connect the Modbus Cables, page 79

Non-Class 2/Non-SELV

Board	Terminal	Description	See
0P6548	J4939–J4941[50]	Output relays	Connect Equipment to Input Contacts and Output Relays, page 75
0P6549	J5607	MBB	Signal Cable Connections to the Switchgear (Boards 0P6547, 0P6548, 0P6549), page 69
0P6549	J5608	SIB	
0P6549	J5620	SSIB	
0P6549	J5621	UOB	
0P6549	J5622	UIB	
0P6549	J5611–J5613	External synchronization	Connect External Synchronization, page 72
0P6548	J5529	Battery temperature sensor 1	Signal Cable Connections to Classic Battery Cabinets (Boards 0P6547, 0P6549, 0P6552), page 70
0P6549	J5609	Battery breaker 1	
0P6549	J5610	Battery breaker 2	
0P6547	J4942–J4943	24 V supply 1	
0P6547	J4929–J4930	24 V supply 2	
0P6547	J4923	DC shunt trip 1	
0P6547	J4924	DC shunt trip 2	
0P6552	J9019	Battery breaker 3	
0P6552	J9020	Battery breaker 4	
0P6552	J9021	Battery temperature sensor 2	
0P6552	J9022–J9023	24 V supply 3	
0P6552	J9024–J9025	24 V supply 4	

50. These output relays can also be Class 2/SELV but the three output relays must have identical reference.

1. Remove the four indicated plates.

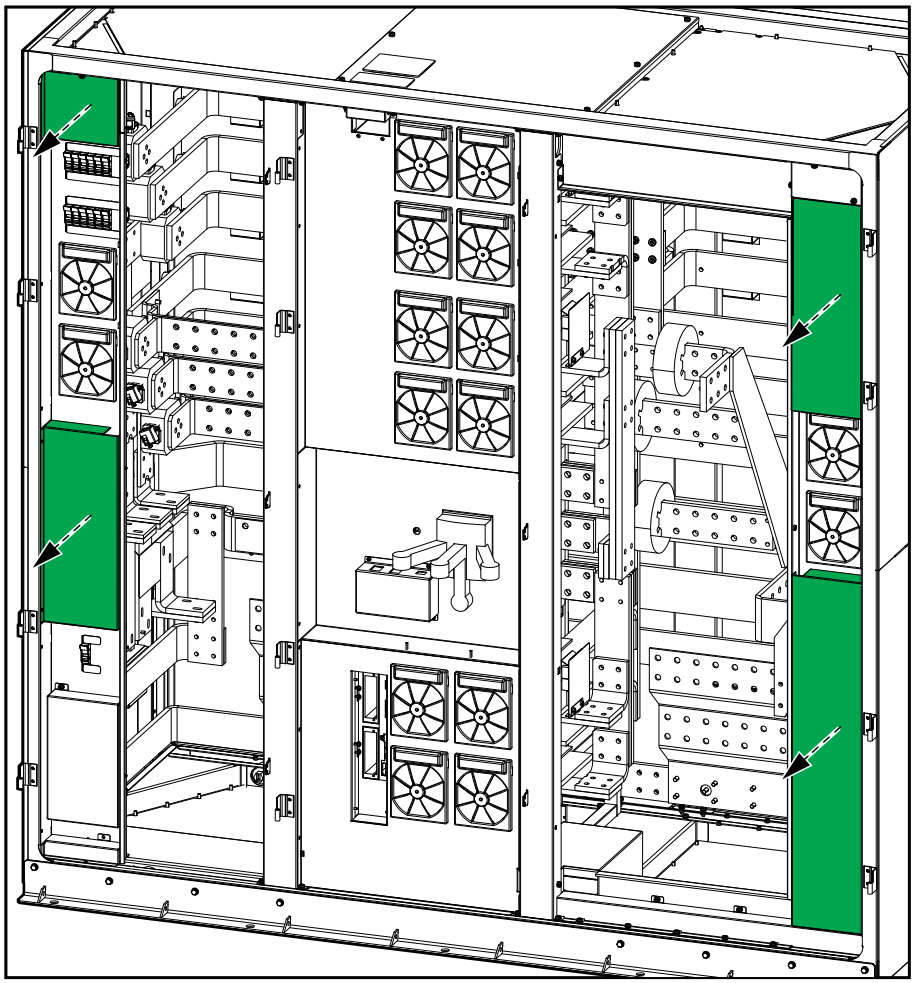

2. Remove the indicated plate to allow for routing of non-Class 2/non-SELV cables.

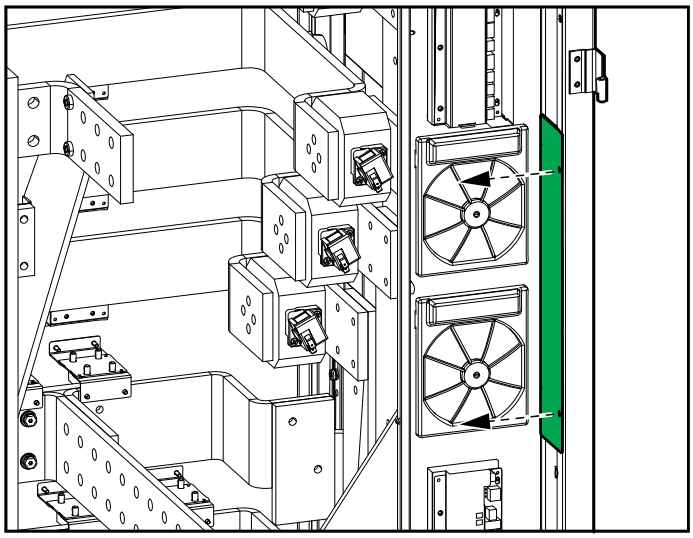

3. For bottom cable entry only: remove the plate in front of the cable channel for non-Class 2/non-SELV cables.

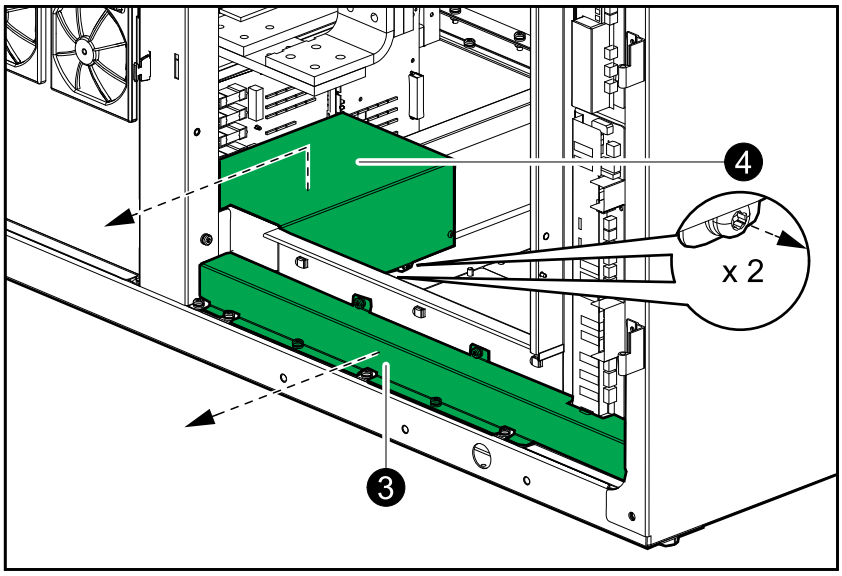

4. For bottom cable entry only: loosen the two screws on the right side of the box and remove the box.

5. For bottom cable entry only: loosen the two screws behind the box and lift out the box.

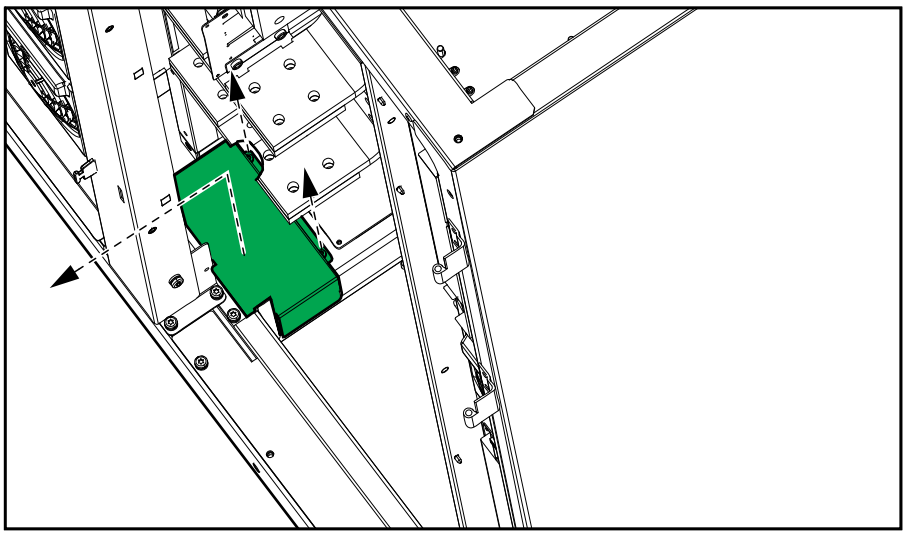

6. Remove the two gland plates from either the top or the bottom of the I/O cabinet and drill holes for the applicable Class 2/SELV and non-Class 2/non-SELV cables in the table below. Install conduits and reinstall the plates.

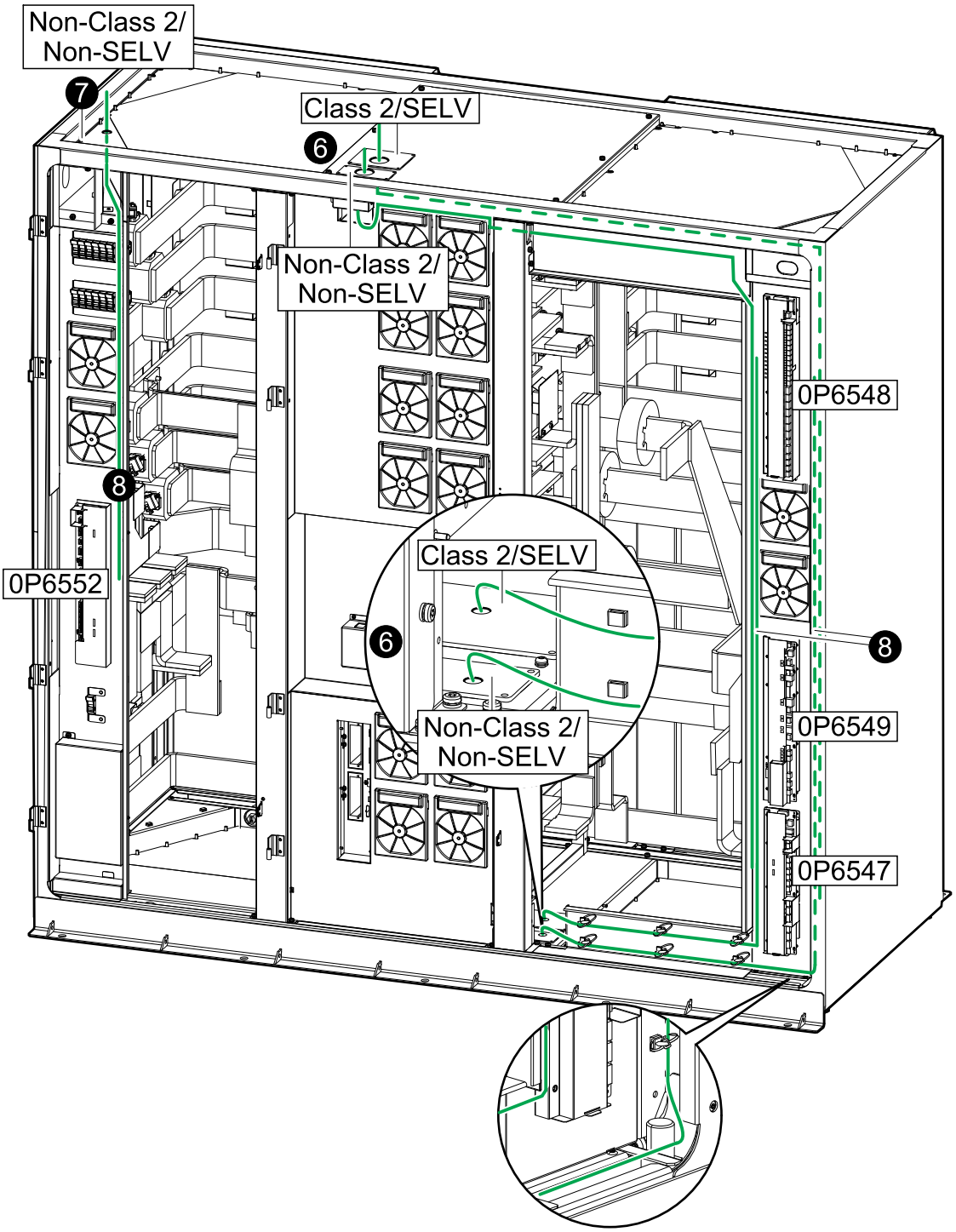

7. In installations with three or four battery banks, remove the top gland plate in the left corner of the I/O cabinet and drill holes for the applicable non-Class 2/ non-SELV cables below. Install conduits and reinstall the plates.

8. Route the cables through the top or bottom and to the boards as shown on the illustration.

   NOTE: Do not connect the signal cables. Signal cables will be connected by Schneider Electric during the assembly service.

Signal Cable Connections to the Switchgear (Boards 0P6547, 0P6548, 0P6549)

NOTE: The unit output breaker UOB must include two separated AUX switches.

NOTE: The solenoid key release unit (SKRU) is only applicable to 480 V systems.

All circuits connected must have the same 0 V reference.

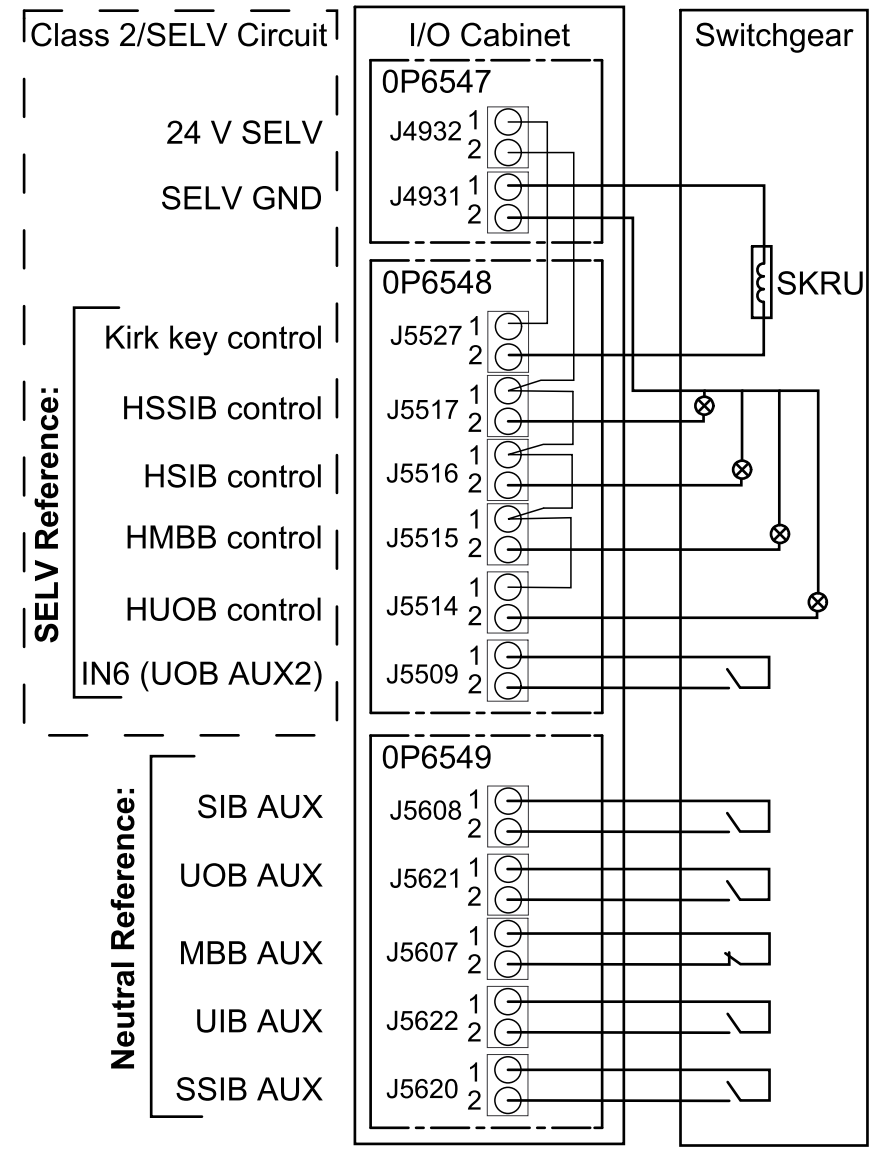

Signal Cable Connections to Classic Battery Cabinets (Boards 0P6547, 0P6549, 0P6552)

NOTE: The illustration below shows a system with four battery banks, each consisting of one classic battery cabinet. Connect signal cables according to the number of classic battery cabinets in your installation.

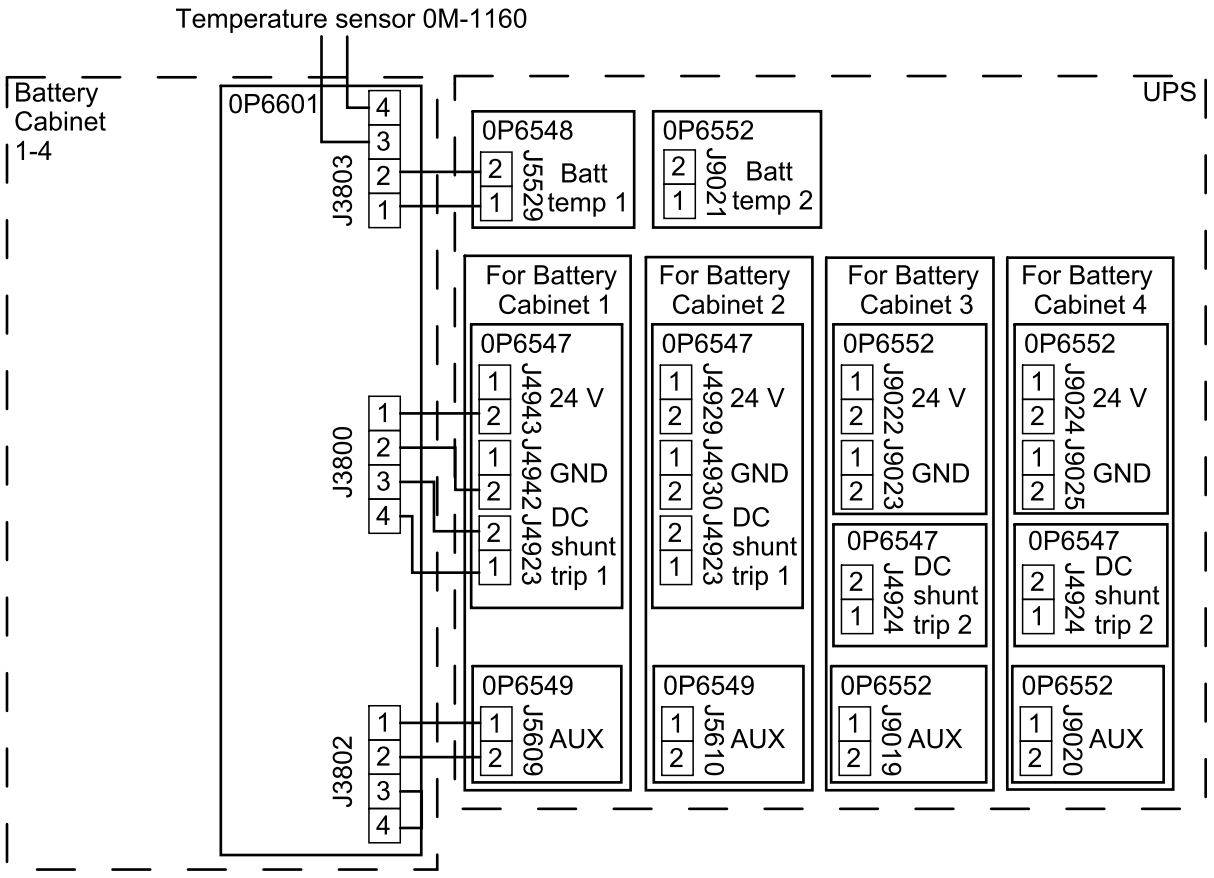

If the battery bank is consisting of two classic battery cabinets, connect signal cables between the two classic battery cabinets in one battery bank as shown.

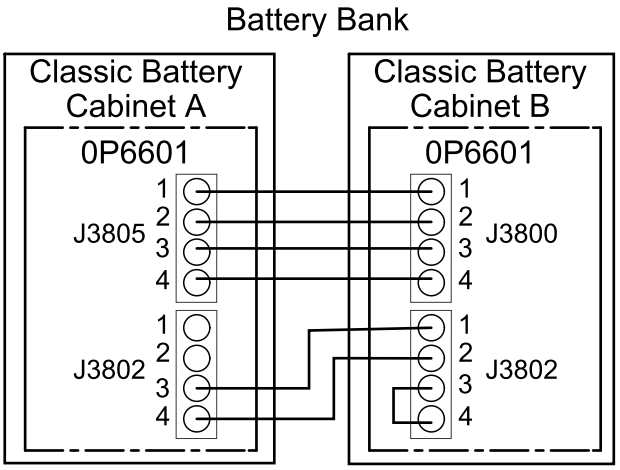

Signal Cable Connections to Battery Breaker Cabinet (Boards 0P6547, 0P6548, 0P6549)

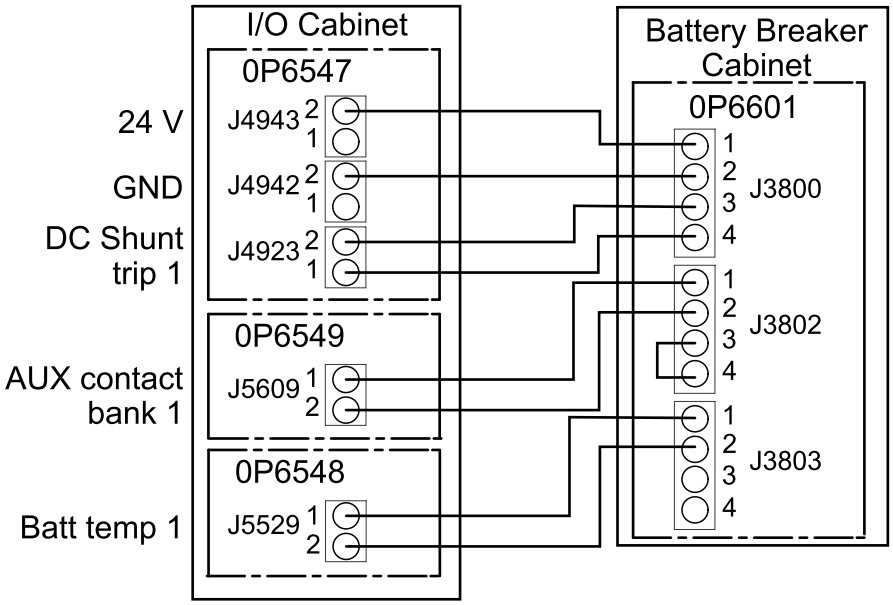

Connect the Emergency Power Off (EPO)

Do not connect any circuit to the EPO terminal block unless it can be confirmed that the circuit is Class 2/SELV.

All circuits connected must have the same 0 V reference.

1. Route the cables from your EPO through the top or bottom of the I/O cabinet and to the EPO terminals J4936–J4938 on 0P6547 as shown in Prepare for External Signal Cables, page 65.
2. Connect the building EPO to the terminal block according to one of the options below.

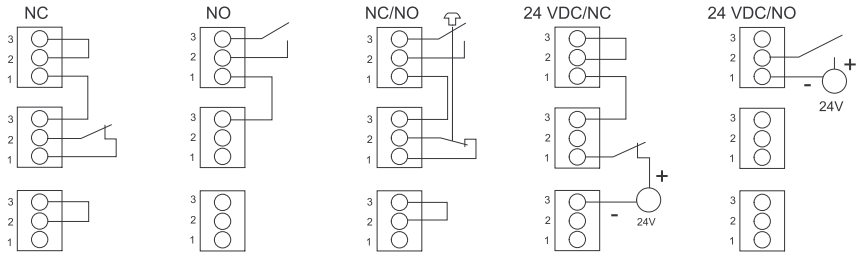

NOTE: Do not connect the terminal block to the board. Signal cables will be connected by Schneider Electric during the assembly service.

Connect External Synchronization

The signal cables must have a minimum rating of 600 V.

1. Route the external synchronization cables through the top or bottom of the I/O cabinet to 0P6549 as shown in Prepare for External Signal Cables, page 65.

2. Connect the three phases to the terminal block:

   NOTE: The phases from the synchronization source must be protected by a fuse of maximum 0.5 A.

   NOTE: Do not connect the terminal block to the board. Signal cables will be connected by Schneider Electric during the assembly service.

   a. Connect L1 to J5611 on 0P6549.

   b. Connect L2 to J5612 on 0P6549.

   c. Connect L3 to J5613 on 0P6549.

Signal Cable Connections for Basic UPS Synchronization to a Fixed Voltage Source (Boards 0P6548, 0P6549)

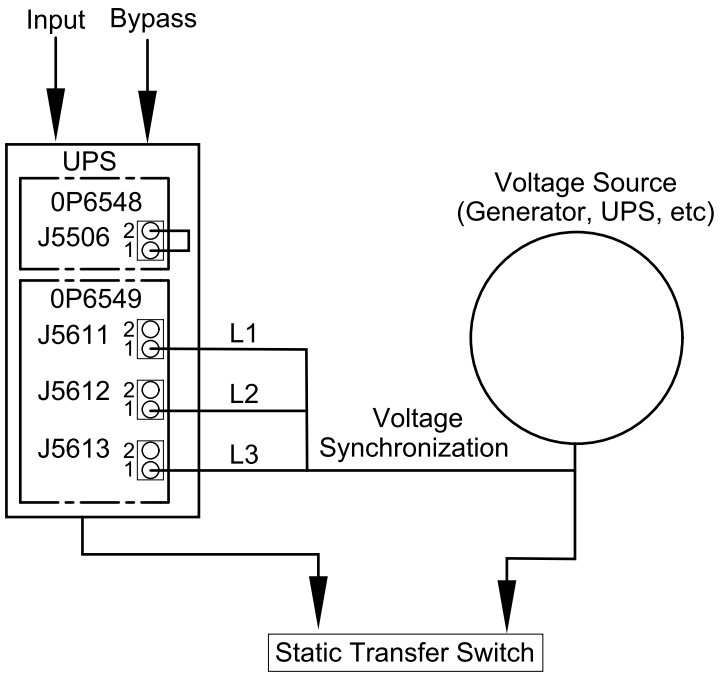

Signal Cable Connections for Dual UPS Synchronization with a Floating Synchronization Master (Boards 0P6548, 0P6549)

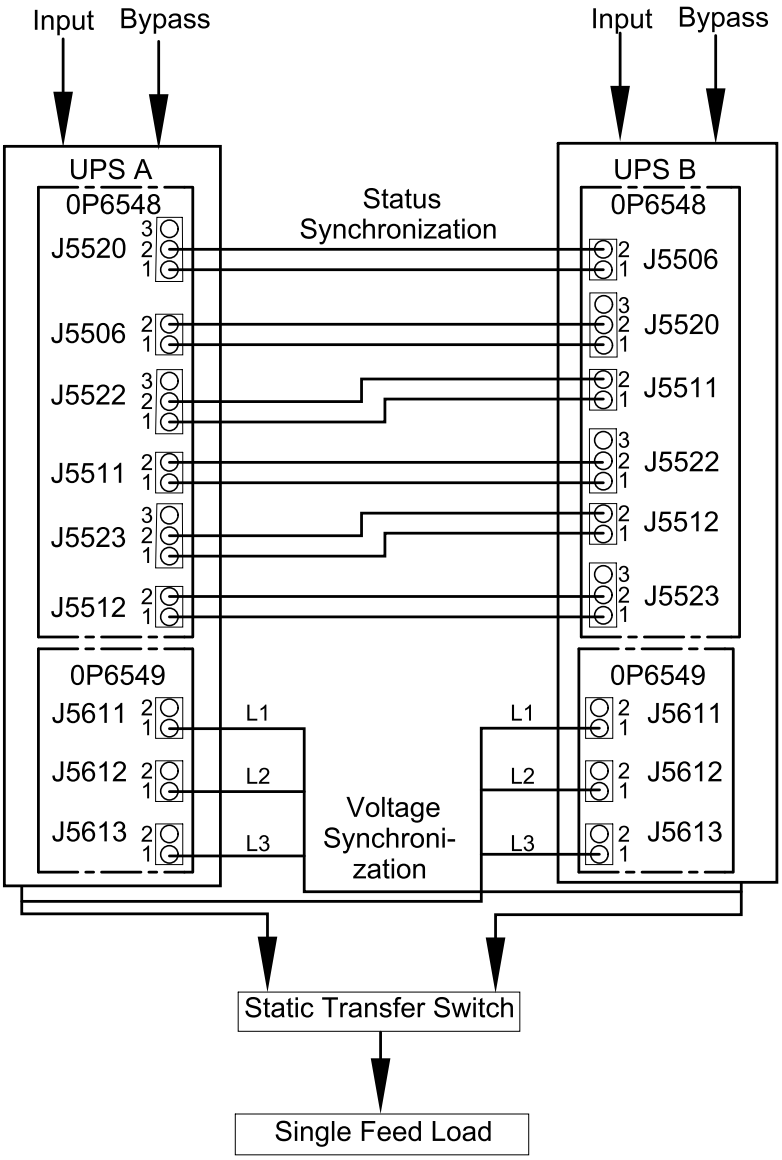

Signal Cable Connections for Fixed Parallel Synchronization Master (Boards 0P6548, 0P6549)

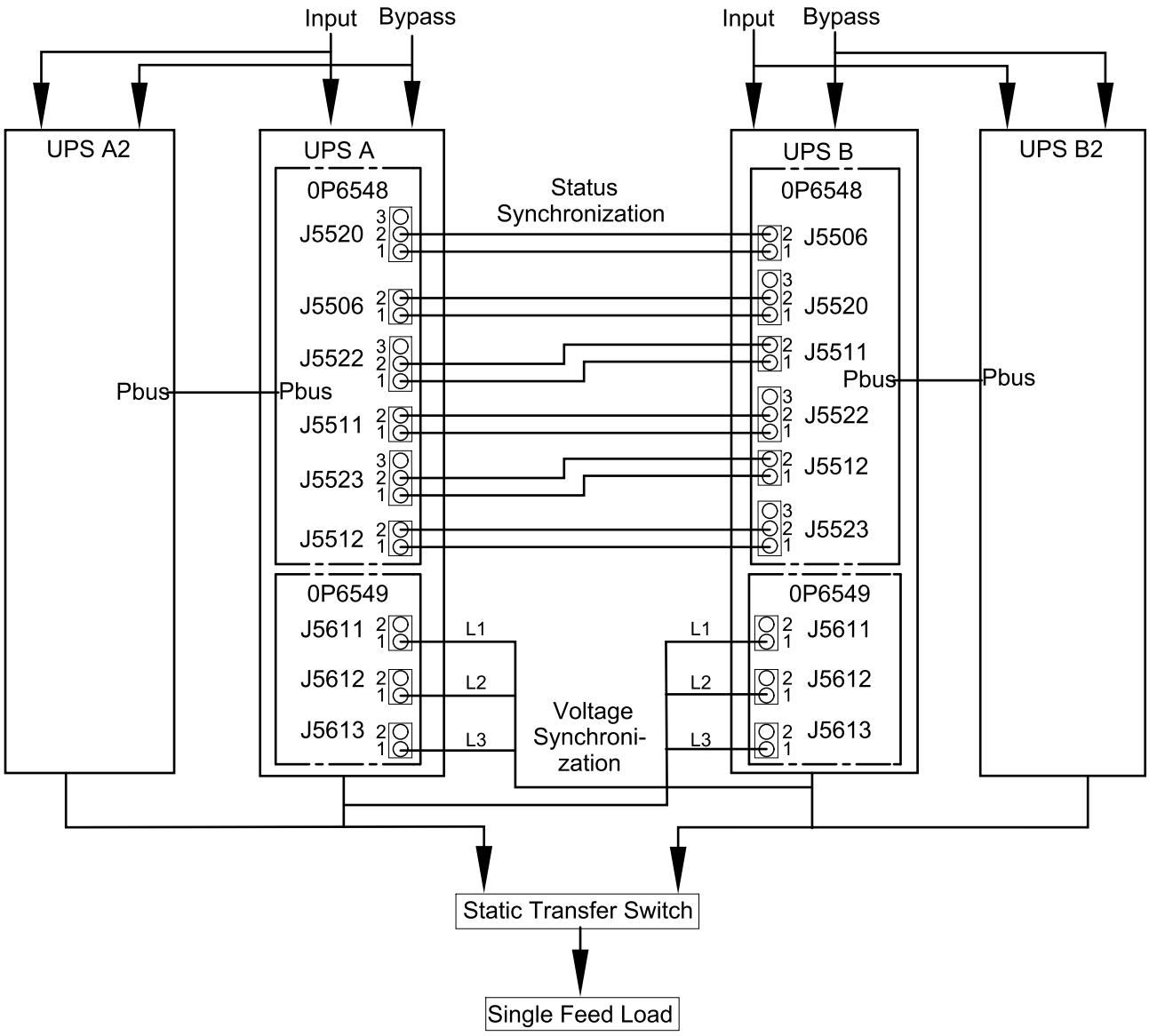

Connect Equipment to Input Contacts and Output Relays

1. Route the signal cables from your contacts/relays through the top or bottom of the I/O cabinet and to the boards in the right side of the I/O cabinet as shown in Prepare for External Signal Cables, page 65.
2. Connect your equipment to the terminal blocks of the input contacts and/or output relays. Make a clear identification of the signal cables connected.

   NOTE: Do not connect the terminal block to the board. Signal cables will be connected by Schneider Electric during the assembly service.

Overview of Input Contacts and Output Relays

Input Contacts

Do not connect any circuit to the input contacts unless it can be confirmed that the circuit is Class 2/SELV.

All circuits connected must have the same 0 V reference.

The switch SW5500 on 0P6548 is used to select between internal SELV supply for inputs (standard setting) and external supply[51]. If external supply is selected, the supply must be connected to J5530.

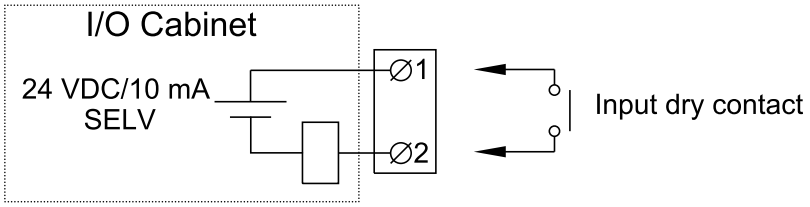

Name	Description	Location
IN 1 (Contact 1)	Configurable input contact	0P6548 terminal J5502[52]
IN 2 (Contact 2)	Configurable input contact	0P6548 terminal J5503[52]
IN 3 (Contact 3)	Configurable input contact	0P6548 terminal J5504[52]
IN 4 (Contact 4)	Configurable input contact	0P6548 terminal J5505[52]
IN 5 (Contact 5)	Configurable input contact	0P6548 terminal J5510[52]
IN 6	UOB redundant AUX contact	0P6548 terminal J5509[52]
IN 7	Transformer temperature switch	0P6548 terminal J5508[52]
IN 8	External bonding contact	0P6548 terminal J5507[52]
IN 9	Forced external synchronization input	0P6548 terminal J5506[52]
IN 10	External synchronization requested	0P6548 terminal J5511[52]
IN 11	Use static bypass standby	0P6548 terminal J5512[52]
IN 14	MegaTie	0P6552 terminal J9027[52]

Output Relays

NOTE: Maximum 250 VAC 5 A must be connected to the output relays. All external circuitry must be fused with maximum 5 A fast acting fuses.

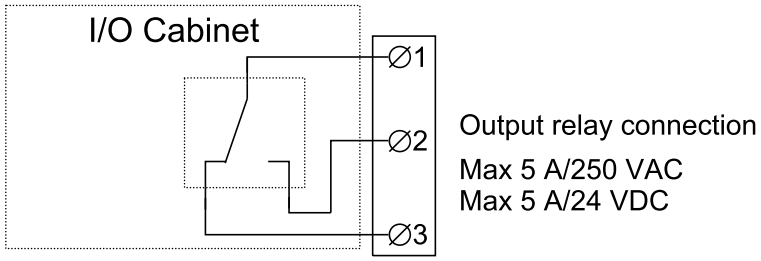

Name	Description	Location
OUT 1 (Relay 1)	Configurable output relay	0P6547 terminal J4939
OUT 2 (Relay 2)	Configurable output relay	0P6547 terminal J4940
OUT 3 (Relay 3)	Configurable output relay	0P6547 terminal J4941
OUT 4	Forced external synchronization output	0P6548 terminal J5520[52]
OUT 5	MegaTie	0P6548 terminal J5521[52]
OUT 6	External synchronization requested output	0P6548 terminal J5522[52]
OUT 7	UPS in inverter ON	0P6548 terminal J5523[52]
OUT 8 (Relay 4)	Configurable output relay	0P6548 terminal J5524[52]

51. An external supply is useful in parallel systems where inputs are connected between different UPSs. This is to have a common reference and to avoid cross currents.
52. Class 2/SELV wiring

Name	Description	Location
OUT 9 (Relay 5)	Configurable output relay	0P6548 terminal J5525[53]
OUT 10 (Relay 6)	Configurable output relay	0P6548 terminal J5528[53]
OUT 14	Bonding contactor	0P6552 terminal J9029[53]

NOTE: Refer to the operation manual for configuration options.

Route the PBUS Cables between Parallel UPS Units

NOTE: Do not connect the PBUS cables. PBUS cables will be connected by Schneider Electric during the assembly service.

Top Cable Entry Systems

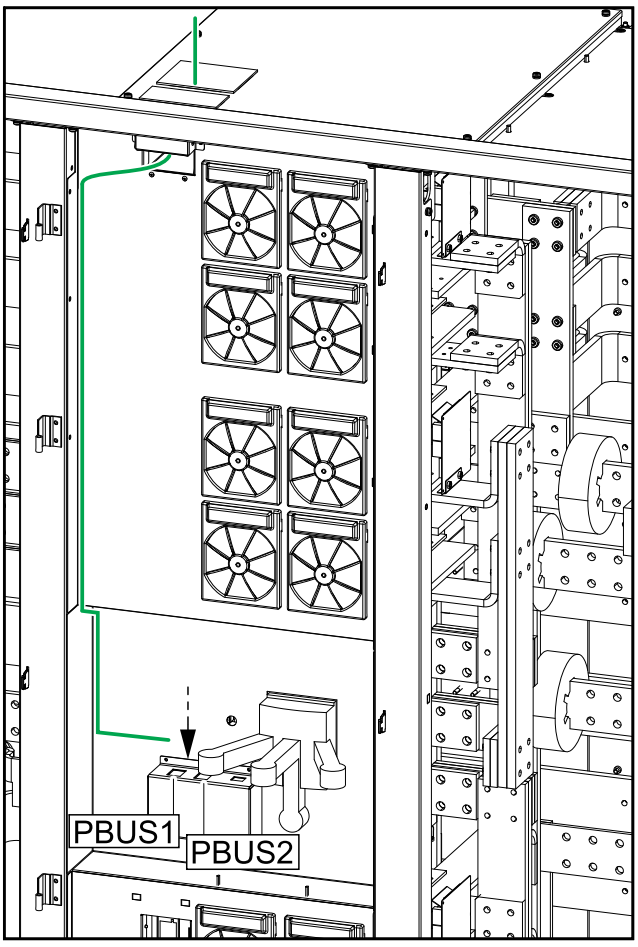

Bottom Cable Entry Systems

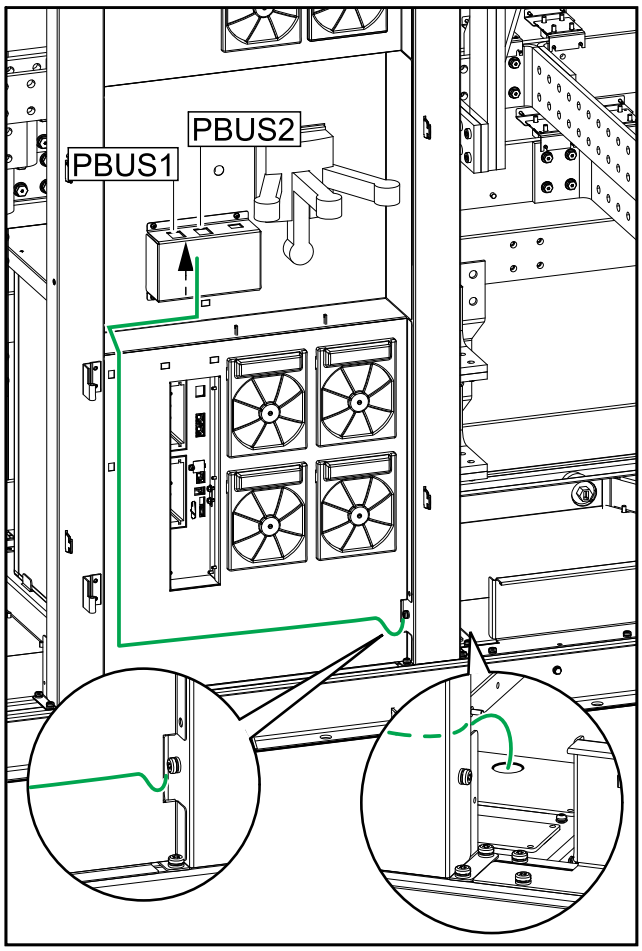

53. Class 2/SELV wiring

1. Route the PBUS cables from the installation kit 0H-0889 through either the top or the bottom of the I/O cabinet according to the principle below.

   NOTE: The PBUS 1 cables are white and the PBUS 2 cables are red.

   NOTE: The total length of the PBUS cables must not exceed 60 m (197 ft).

Example of System with Three UPSs in Parallel

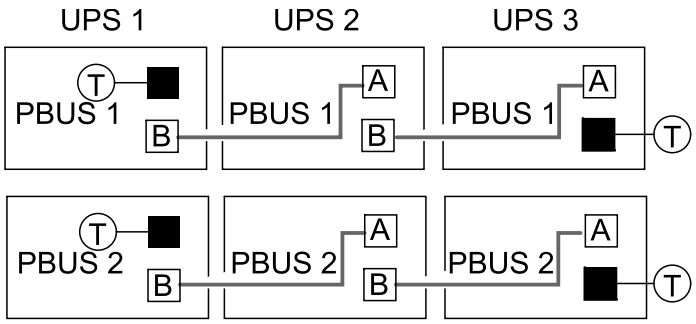

External Communication

The following interfaces are supported:

A. Two smart slots for optional network management cards (AP9630, AP9631, AP9635CH).

   NOTE: If the input dry contact AP9810 is connected to AP9631 or AP9635CH, the total length of cables for connected equipment must not exceed 30 m (98 ft). Use the plate for shielding.

B. Modbus and modbus dip switch settings.

C. Network/ethernet.

Front View of the I/O Cabinet

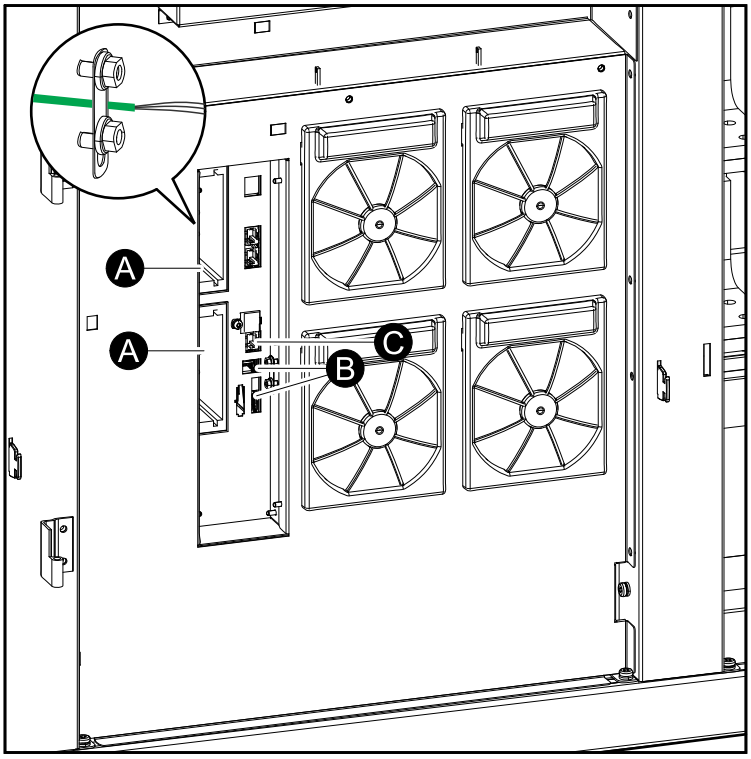

Connect the Modbus Cables

NOTE: Terminators for modbus connection is provided in the installation kit 0H-9101.

Front View of the I/O Cabinet in Top Cable Entry Systems

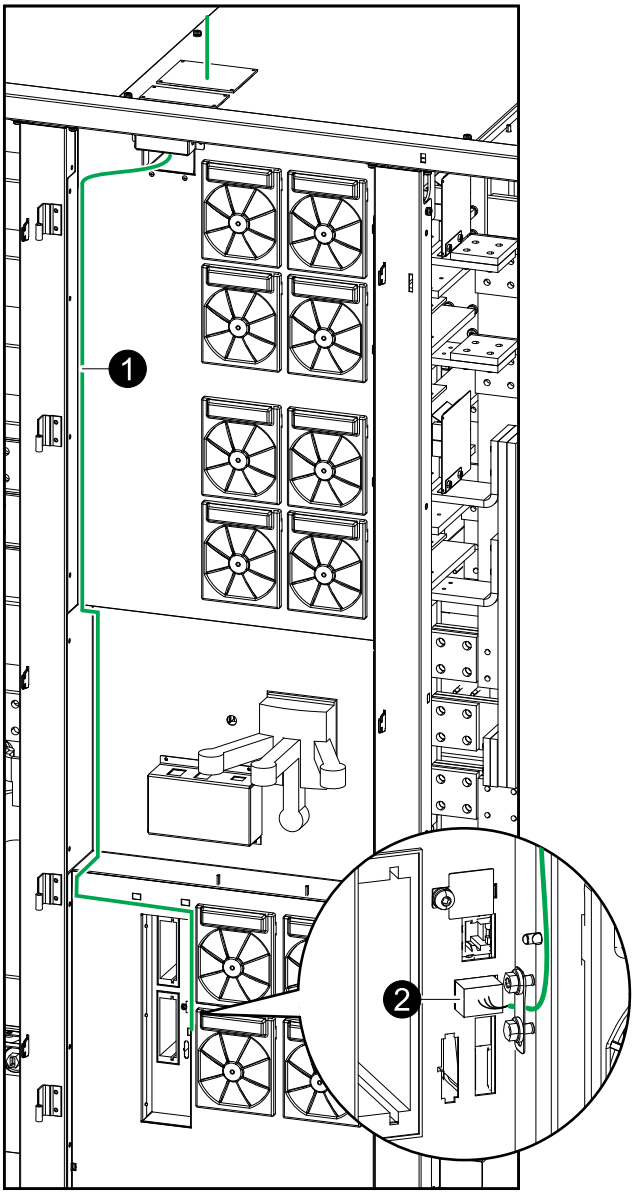

Front View of the I/O Cabinet in Bottom Cable Entry Systems

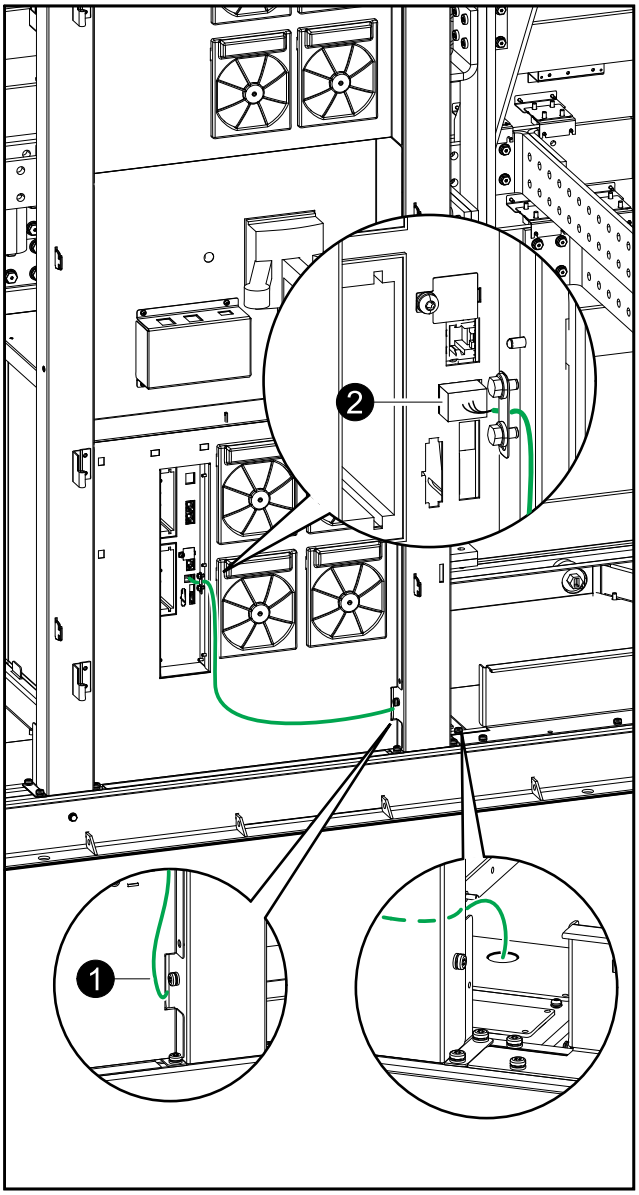

1. Route the cables as shown on the illustrations.

2. Connect the modbus cables. Use either 2–wire or 4–wire connection. Shield the cables as shown.

   NOTE: Shielded cables must be used for modbus connections. The shield connection to the ground must be as short as possible (ideally below 1 cm).

2–Wire Connection with One UPS

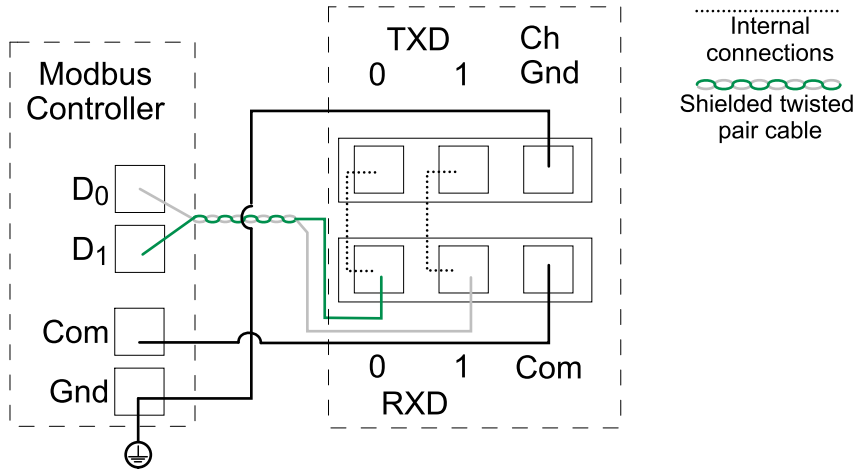

Example: 2–Wire Connection with Two UPSs

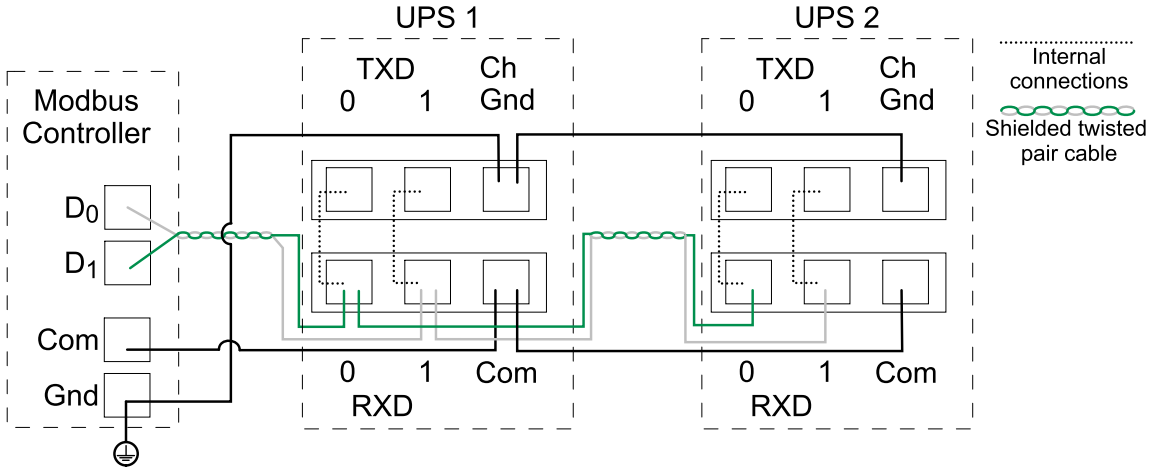

Example: 4–Wire Connection with One UPS

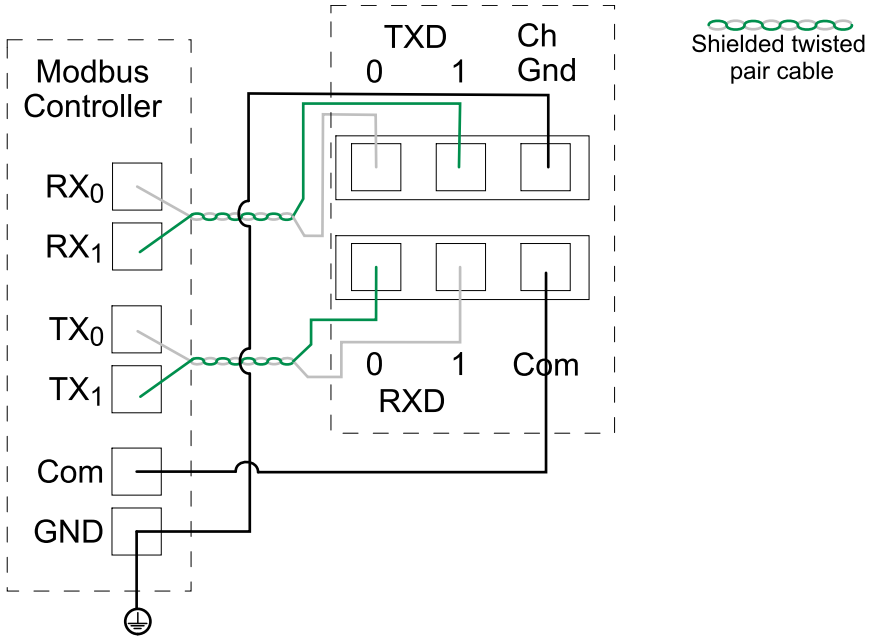

Example: 4–Wire Connection with Two UPSs

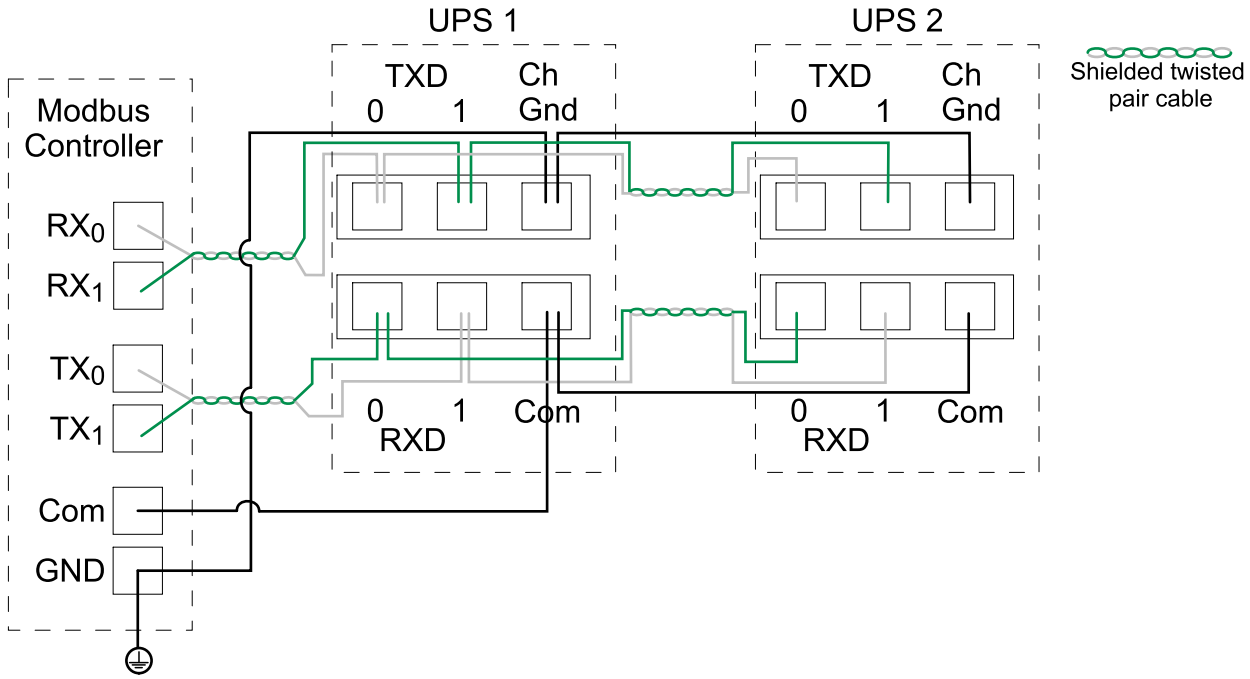

3. Set the modbus dip switches to match your installation.

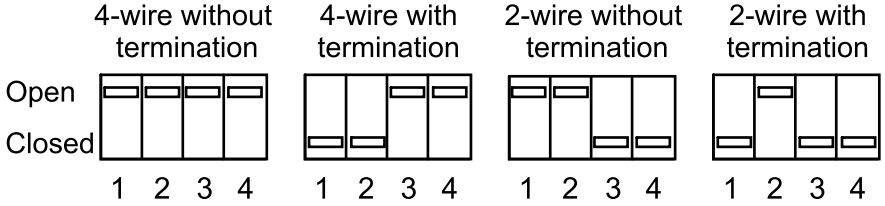

Final Mechanical Assembly

Final Mechanical Assembly of the I/O Cabinet

1. Lift up the Class 2/SELV cables.

Front View of the I/O Cabinet

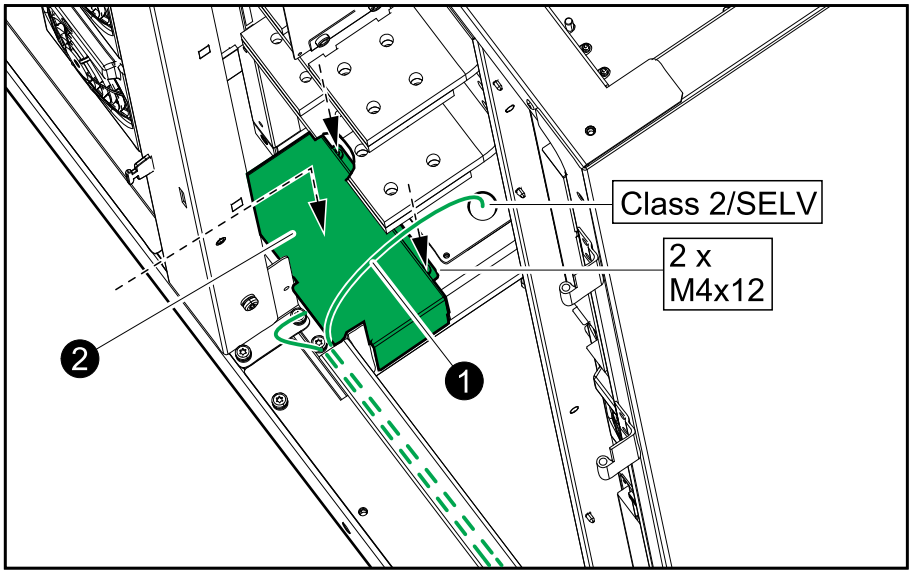

2. Reinstall the indicated box over the non-Class 2/non-SELV cables.
3. Reinstall the indicated box over Class 2/SELV cables.

Front View of the I/O Cabinet

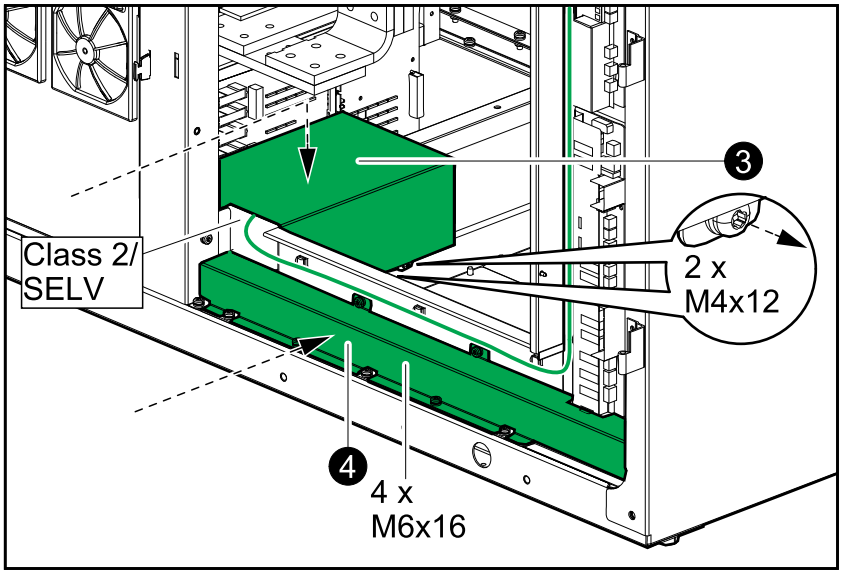

4. Reinstall the plate over the cable channel for non-Class 2/non-SELV cables.

5. Reinstall the two plates in the left side.

Front View of the I/O Cabinet

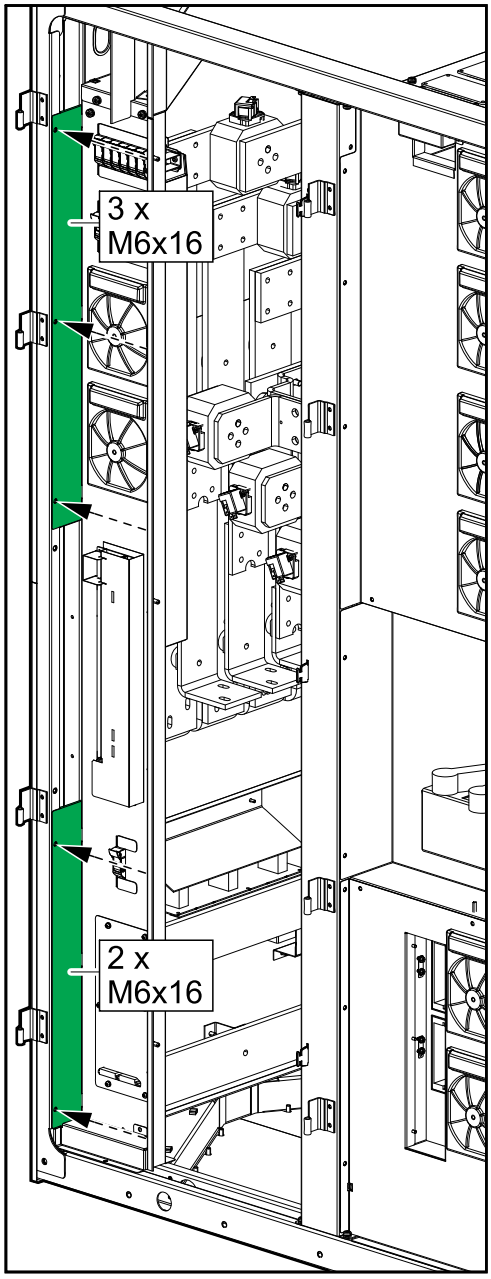

6. Reinstall the plate in the right side.

Front View of the I/O Cabinet

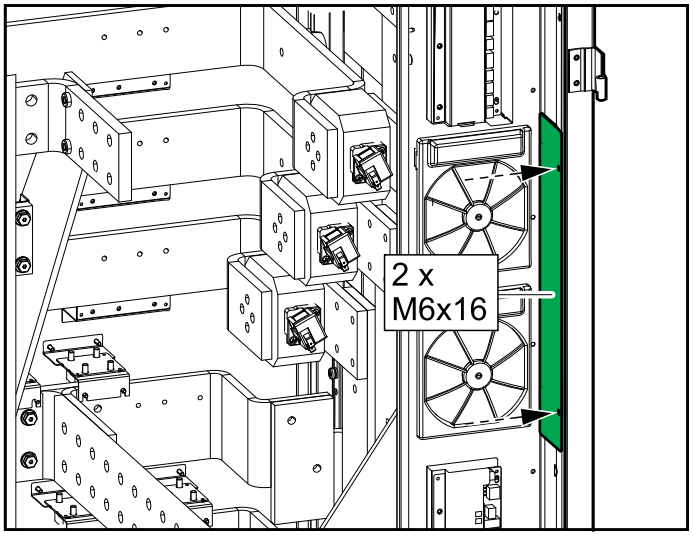

7. Reinstall the six plates in the left and right sides of the I/O cabinet.

Front View of the I/O Cabinet

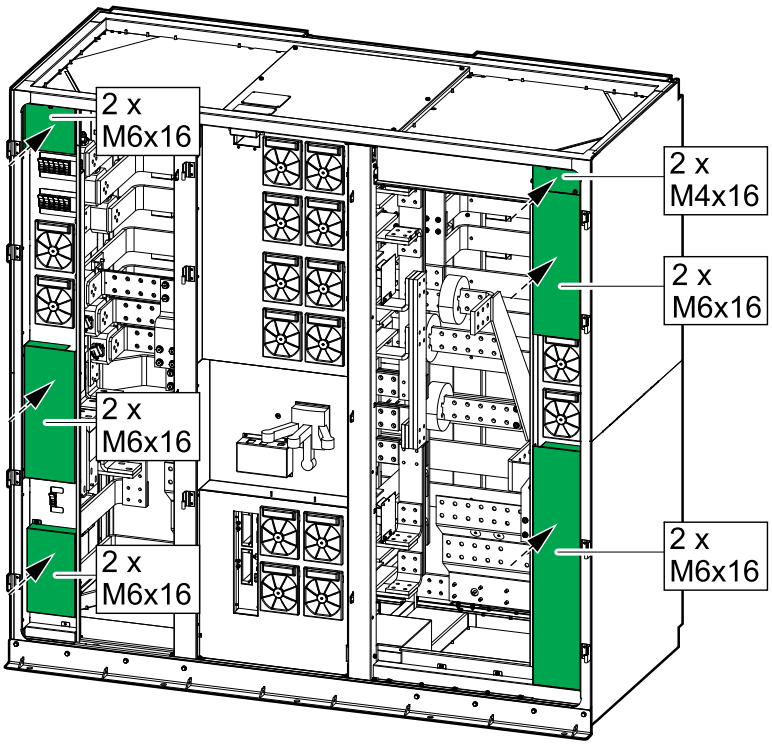

8. Reinstall the two metal plates.

Front View of the I/O Cabinet

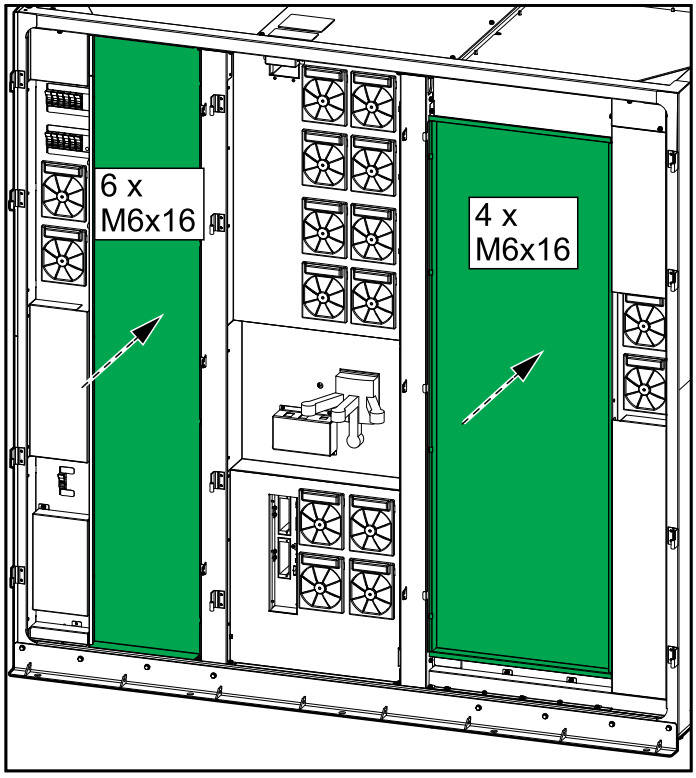

9. Close the front doors.

Final Mechanical Assembly of the Power Cabinets

NOTE: Perform the below steps on all the power cabinets.

1. Reinstall the three plates in the given order (a-c).

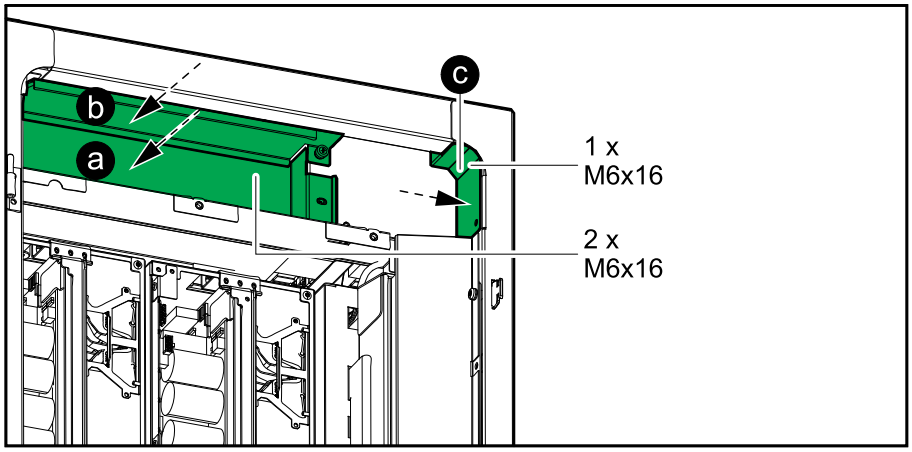

Schneider Electric
35 rue Joseph Monier
92500 Rueil Malmaison
France

+ 33 (0) 1 41 29 70 00

990-5783F-001

As standards, specifications, and design change from time to time, please ask for confirmation of the information given in this publication.

© 2016 – 2021 Schneider Electric. All rights reserved.

990-5783F-001