L14 Gen 3 and L15 Gen 3
User Guide



Read this first

Before using this documentation and the product it supports, ensure that you read and understand the following:

- *Safety and Warranty Guide*
- *Setup Guide*
- *Generic Safety and Compliance Notices*

First Edition (March 2022)

© Copyright Lenovo 2022.

LIMITED AND RESTRICTED RIGHTS NOTICE: If data or software is delivered pursuant to a General Services Administration “GSA” contract, use, reproduction, or disclosure is subject to restrictions set forth in Contract No. GS-35F-05925.

Contents

About this documentation iii

Chapter 1. Meet your computer 1

Front 1
Side view 4
Rear view 6
Bottom 7
USB connectors 9

Chapter 2. Get started with your computer 11

Get started with your desktop 11
Manage networks 11
Connect to Wi-Fi networks 11
Airplane mode 12
Interact with your computer 12
Use the camera 12
Use the keyboard shortcuts 12
Use the TrackPoint pointing device 13
Use the trackpad 15
Use the multi-touch screen (for selected models) 16
Connect to an external display 17

Chapter 3. Explore your computer . . 19

Use the Intelligent Cooling feature 19
Use the P-to-P 2.0 charging function 19
Set the power plan 19
Connect to a Bluetooth-enabled device 20
Enabling Nvidia proprietary drivers in Fedora (for selected models) 20
Accessories 20
Purchase options 21

Chapter 4. Secure your computer and information 23

Lock the computer 23
Use the fingerprint reader (for selected models) . . 23
Use privacy protection (for selected models) . . . 24
Use passwords 24
Password types 24
Set, change, and remove a password 25
Use Power Loss Protection function (for selected models) 26

Chapter 5. Configure advanced settings 27

UEFI BIOS 27
What is UEFI BIOS 27
Enter the UEFI BIOS menu 27
Navigate in the UEFI BIOS interface 27
Change the startup sequence 27
Detect memory retraining 28
Set the system date and time 28
Update UEFI BIOS 28

Chapter 6. CRU replacement 29

CRU list 29
Disable the built-in battery 29
Replace a CRU 30
Base cover assembly 30
Wireless-WAN card (for selected models) . . . 32
Memory module 34
M.2 solid-state drive 35
Speaker assembly 37
Keyboard 38

Chapter 7. Help and support 43

Frequently asked questions 43
Error messages 44
Beep errors 45
Self-help resources 46
Call Lenovo 47
Before you contact Lenovo 47
Lenovo Customer Support Center 48
Purchase additional services 49

Appendix A. Compliance information 51

Appendix B. Notices and trademarks 53

© Copyright Lenovo 2022

About this documentation

- Illustrations in this documentation might look different from your product.
- Depending on the model, some optional accessories, features, software programs, and user interface instructions might not be applicable to your computer.
- Documentation content is subject to change without notice. To get the latest documentation, go to https://pcsupport.lenovo.com.

© Copyright Lenovo 2022

Chapter 1. Meet your computer

Front

L14 Gen 3



© Copyright Lenovo 2022

L15 Gen 3



	Infrared camera* / Camera*		Webcam privacy shutter
	Microphone		Touch screen
	Power button with fingerprint reader		TrackPoint® pointing stick
	NFC (near field communication) mark*		Trackpad
	TrackPoint buttons		Speaker

* for selected models

Webcam privacy shutter

Slide the webcam privacy shutter to cover or uncover the camera lens. It is designed to protect your privacy.

Side view

AMD models

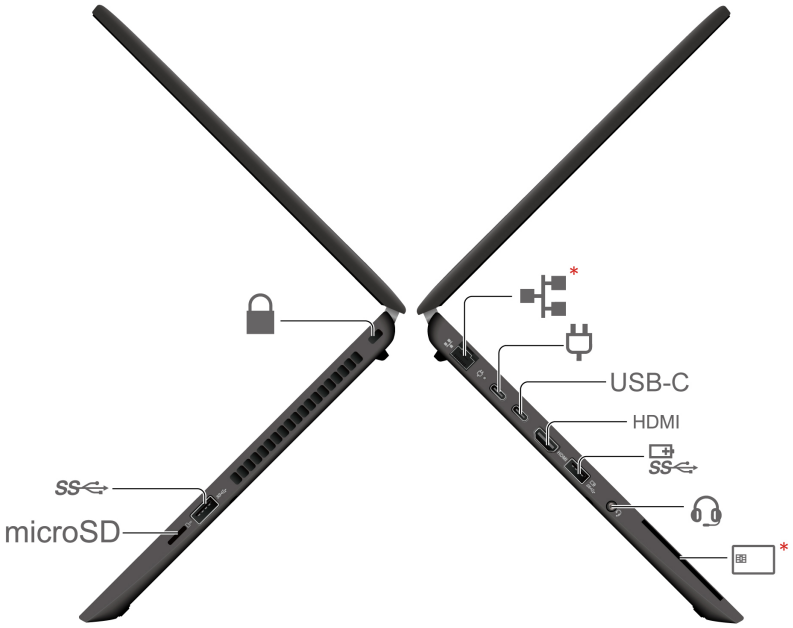

*	Ethernet connector		USB-C® (3.2 Gen 1) power connector
USB-C	USB-C (3.2 Gen 2) connector	HDMI	HDMI™ connector
	Always on USB 3.2 connector Gen 1		Audio connector
*	Smart-card slot*	microSD	microSD-card slot
	USB 3.2 connector Gen 1		Security-lock slot

* for selected models

Intel models

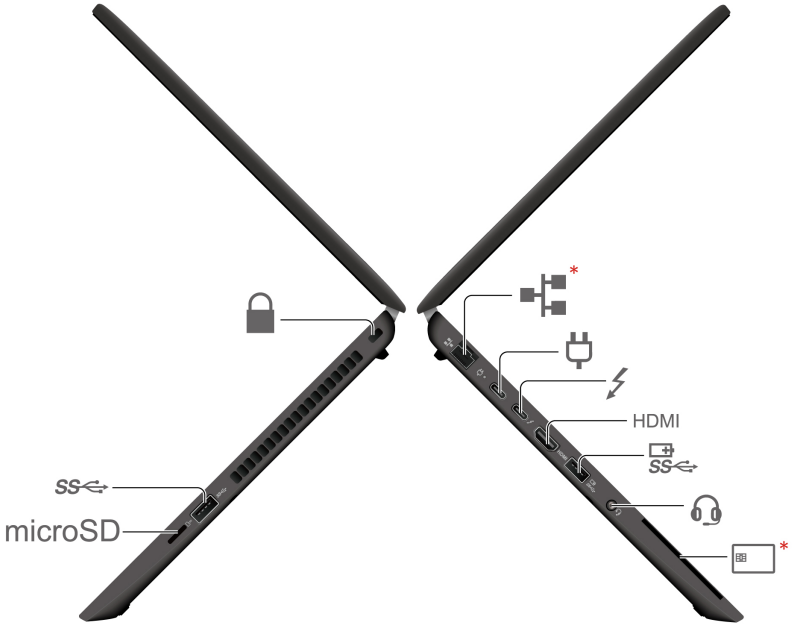

*	Ethernet connector		USB-C (3.2 Gen 1) power connector
	USB-C (Thunderbolt™ 4) connector	HDMI	HDMI connector
	Always on USB 3.2 connector Gen 1		Audio connector
*	Smart-card slot*	microSD	microSD-card slot
	USB 3.2 connector Gen 1		Security-lock slot

* for selected models

Rear view



*	Nano-SIM-card tray

* for selected models

Bottom

L14 Gen 3

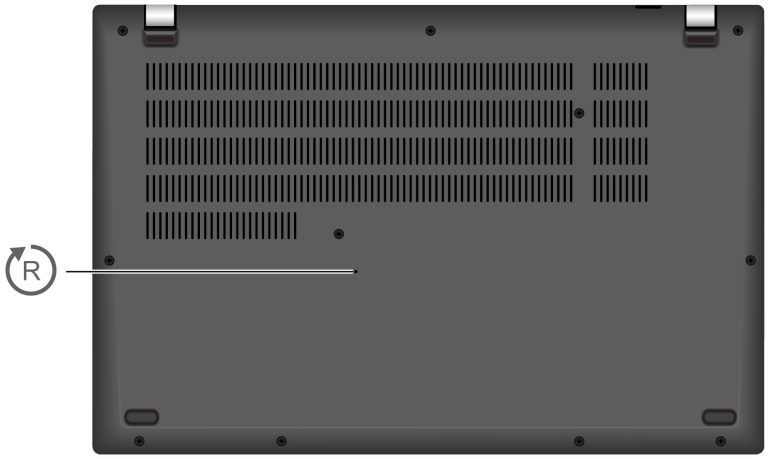

L15 Gen 3

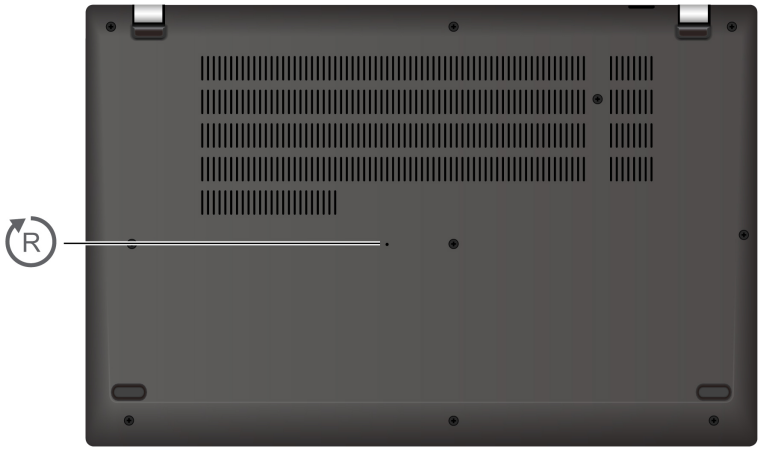

Emergency-reset hole	

Emergency-reset hole

If the computer stops responding and you cannot turn it off by pressing the power button, reset your computer:

1. Disconnect your computer from ac power.
2. Insert a straightened paper clip into the hole to cut off power supply temporarily.
3. Connect your computer to ac power and then turn on your computer.

USB connectors

Note: Depending on the model, some USB connectors might not be available on your computer.

Connector name	Description
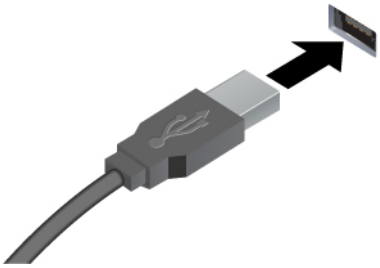 • USB 2.0 connector • USB 3.2 connector Gen 1 • USB 3.2 connector Gen 2	Connect USB-compatible devices, such as a USB keyboard, USB mouse, USB storage device, or USB printer.
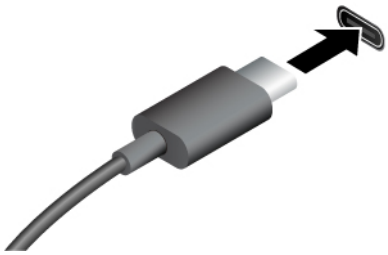 • USB-C (3.2 Gen 1) connector • USB-C (3.2 Gen 2) connector • USB-C (Thunderbolt 3) connector • USB-C (Thunderbolt 4) connector • USB 4 connector	• Charge USB-C compatible devices with the following output voltage and current: – AMD models: 5 V and 1.5 A – Intel models: 5 V and 3 A • Connect to an external display: – USB-C to VGA: up to 1920 x 1200 pixels, 60 Hz – USB-C to DP: – AMD models: up to 5120 x 2880 pixels, 60 Hz – Intel models: up to 5120 x 3200 pixels, 60 Hz • Connect to USB-C accessories to help expand your computer functionality. To purchase USB-C accessories, go to https://www.lenovo.com/accessories.

Statement on USB transfer rate

Depending on many factors such as the processing capability of the host and peripheral devices, file attributes, and other factors related to system configuration and operating environments, the actual transfer rate using the various USB connectors on this device will vary and will be slower than the data rate listed below for each corresponding device.

USB device	Data rate (Gbit/s)
3.2 Gen 1 / 3.1 Gen 1	5
3.2 Gen 2 / 3.1 Gen 2	10
3.2 Gen 2 × 2	20
4 Gen 2 × 2	20
4 Gen 3 × 2	40

USB device	Data rate (Gbit/s)
Thunderbolt 3	40
Thunderbolt 4	40

Chapter 2. Get started with your computer

Get started with your desktop

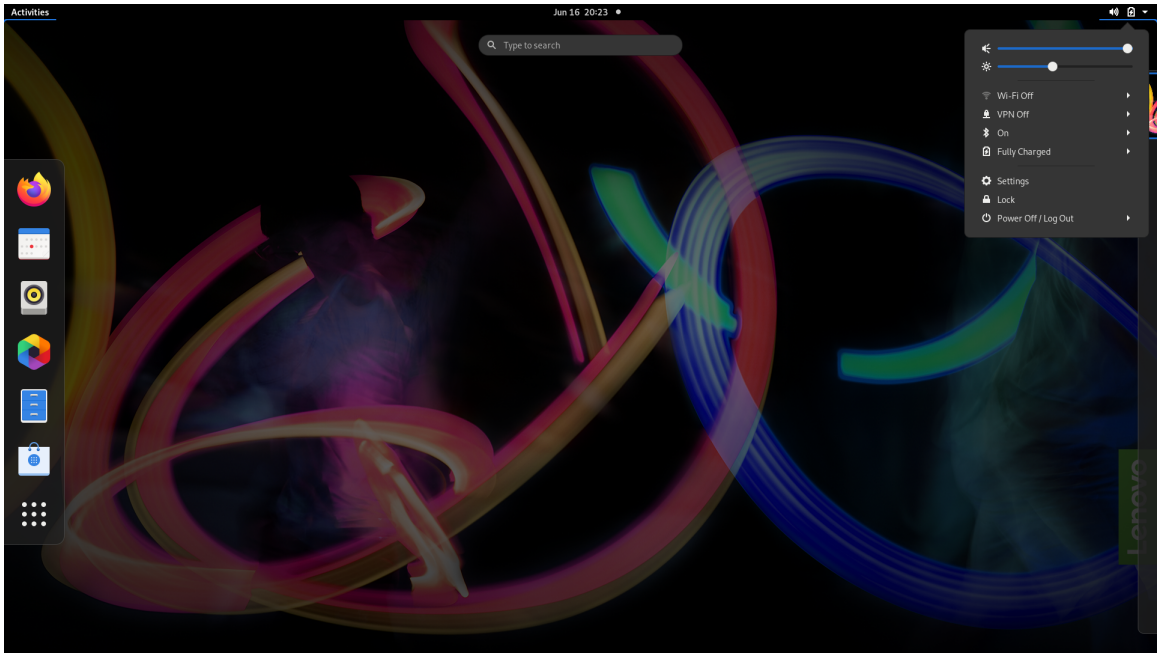

Launch an app

- Use the super key (with the Windows logo) or open the Activities menu on the top left and type in the name of the application you want to launch.
- Click the "show application" menu (For the Fedora operating system, you can see the menu after opening Activities menu) on the lower left and type in the name of the application you want to launch.

Launch settings

Select the system menu arrow on the top right and click on **Settings**.

Get support

- For the Ubuntu operating system, see the Ubuntu documentation site at https://help.ubuntu.com/lts/ubuntu-help/index.html.
- For the Fedora operating system, see the Fedora project wiki at https://fedoraproject.org/wiki/Fedora_Project_Wiki.
- The Gnome desktop is installed by default and is designed to be simple and easy to use. Details on using Gnome are available by launching the Help application or online at https://help.gnome.org/users/.

Manage networks

Your computer helps you connect to the world through a wired or wireless network.

Connect to Wi-Fi networks

1. Click the system menu arrow on the top right. A list of available wireless networks is displayed.

© Copyright Lenovo 2022

2. Select a network available for connection. Provide required information, if needed.

Airplane mode

When the Airplane mode is enabled, all wireless features are disabled.

To enable or disable the Airplane mode:

1. Use the system menu drop down (top right) and choose **Settings**.
2. Click the Wi-Fi option.
3. Turn on or turn off the **Airplane mode** switch.

Interact with your computer

Your computer provides you various ways to navigate the screen.

Use the camera

- Take pictures or record videos by using the **Cheese** application. The indicator next to the camera is on when the camera is in use.
- If you use other apps that support photographing, video chatting, and video conference, the camera starts automatically when you enable the camera-required feature from the app.

Note: IR function is currently limited in Linux. Make sure the regular camera mode is selected if you see gray lines.

Use the keyboard shortcuts

The special keys on the keyboard help you work more effectively.

https://support.lenovo.com/us/en/videos/vid500145

	Invoke the special function printed as an icon on each key or standard function of F1–F12 function keys. FnLock indicator on: standard function FnLock indicator off: special function
	Enable / disable speakers
	Decrease volume
	Increase volume
	Enable / disable microphones
	Darken display
	Brighten display
	Manage external displays

	Enable / disable airplane mode
	Open calculator (for L15 Gen 3 only)
	Enter sleep mode (for L15 Gen 3 only)
	Open Snipping Tool
	Toggle keyboard backlight (for selected models)
	Break operation
	Pause operation
	Scroll contents
	Send system request
	Enter sleep mode To wake up the computer, press Fn or the power button.
	Go to beginning
	Go to end

Use the TrackPoint pointing device

The TrackPoint pointing device enables you to perform all the functions of a traditional mouse, such as pointing, clicking, and scrolling.

Use the TrackPoint pointing device

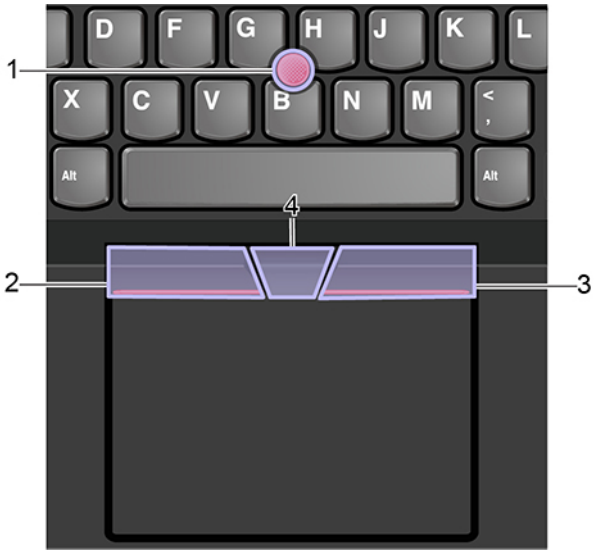

1. **Pointing stick**

Use your index finger or middle finger to apply pressure to the pointing-stick nonslip cap in any direction parallel to the keyboard. The pointer on the screen moves accordingly but the pointing stick itself does not move. The higher the pressure applied, the faster the pointer moves.

2. **Left-click button**

Press to select or open an item.

3. **Right-click button**

Press to display a shortcut menu.

4. **Middle button**

Press and hold the dotted middle button while applying pressure to the pointing stick in the vertical or horizontal direction. Then, you can scroll through the document, Web site, or apps.

Replace the pointing-stick nonslip cap

Note: Ensure that the new cap has grooves **a**.



Use the trackpad

The entire trackpad surface is sensitive to finger touch and movement. You can use the trackpad to perform all the pointing, clicking, and scrolling functions of a traditional mouse. Tap on the surface of the trackpad with one finger to perform the left-click action, with two fingers to perform the right-click action.

Use the touch gestures

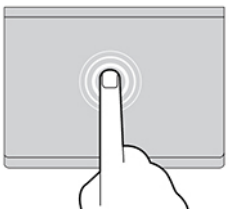

Tap

Tap anywhere on the trackpad with one finger to select or open an item.

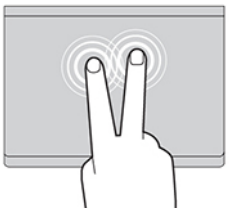

Two-finger tap

Tap anywhere on the trackpad with two fingers to display a shortcut menu.

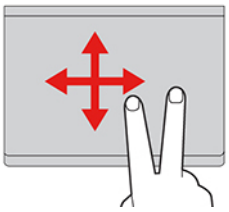

Two-finger scroll

Put two fingers on the trackpad and move them in the vertical or horizontal direction. This action enables you to scroll through the document, Web site, or apps.

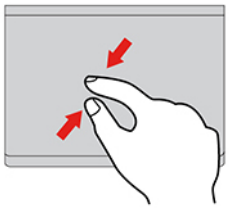

Two-finger zoom out

Put two fingers on the trackpad and move them closer together to zoom out.

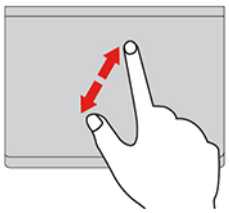

Two-finger zoom in

Put two fingers on the trackpad and move them farther apart to zoom in.

Notes:

- When using two or more fingers, ensure that you position your fingers slightly apart.
- Some gestures are not available if the last action was done from the TrackPoint pointing device.
- Some gestures are only available when you are using certain apps.
- If the trackpad surface is stained with oil, turn off the computer first. Then, gently wipe the trackpad surface with a soft and lint-free cloth moistened with lukewarm water or computer cleaner.

For more gestures, see the help information of the pointing device.

Use the multi-touch screen (for selected models)

If your computer display supports the multi-touch function, you can navigate the screen with simple touch gestures.

Note: Some gestures might not be available depending on the app you use.

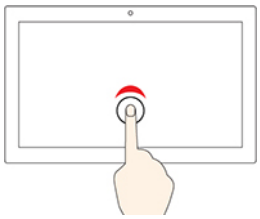

Tap once

- From the **Start** menu: Open an app or item.
- From the desktop: Select an app or item.
- In an open app: Perform an action such as **Copy**, **Save**, and **Delete**, depending on the app.



Tap twice quickly

Open an app or item from the desktop.

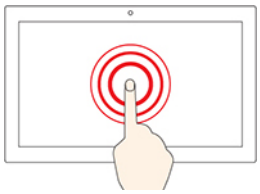

Tap and hold

Open a shortcut menu.

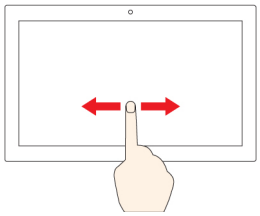

Slide

Scroll through items, such as lists, pages, and photos.

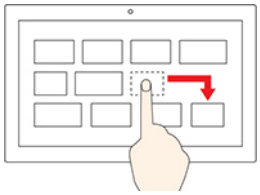

Drag an item to the location you want

Move an object.

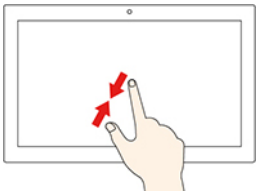

Move two fingers closer together

Zoom out.

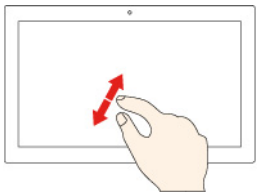

Move two fingers farther apart

Zoom in.

Tips

- Turn off the computer before cleaning the multi-touch screen.
- Use a dry, soft, and lint-free cloth or a piece of absorbent cotton to remove fingerprints or dust from the multi-touch screen. Do not apply solvents to the cloth.
- The multi-touch screen is a glass panel covered with a plastic film. Do not apply pressure or place any metallic object on the screen, which might damage the touch panel or cause it to malfunction.
- Do not use fingernails, gloved fingers, or inanimate objects for input on the screen.
- Regularly calibrate the accuracy of the finger input to avoid a discrepancy.

Connect to an external display

Connect your computer to a projector or a monitor to give presentations or expand your workspace.

Connect to a wired display

1. Connect the external display to an appropriate video connector on your computer.
2. Connect the external display to an electrical outlet.
3. Turn on the external display.

If your computer cannot detect the external display, right-click a blank area on the desktop, and then click **Display settings**.

Set the display mode

Press 

or 

and then select a display mode of your preference.

Change display settings

1. Right-click a blank area on the desktop and select **Display settings**.
2. Select the display that you want to configure.
3. Change display settings of your preference.

You can change the settings for both the computer display and the external display. For example, you can define which one is the main display and which one is the secondary display. You also can change the resolution and orientation.

Note: If you set a higher resolution for the computer display than the external display, only part of the screen can be displayed on the external display.

Chapter 3. Explore your computer

Use the Intelligent Cooling feature

The Intelligent Cooling feature enables your computer to work in the following three modes:

- Power Saver mode: the quietest fan speed
- Balanced mode: balanced performance and fan speed
- Performance mode: the highest performance and normal fan speed

Your computer starts up in balanced mode by default, do the following to switch to the preferred mode:

- Press Fn+L to switch to power saver mode.
- Press Fn+M to switch to balanced mode.
- Press Fn+H to switch to performance mode.

Use the P-to-P 2.0 charging function

The USB-C connector on the computer features the Lenovo-unique P-to-P 2.0 charging function. When no ac power is available, this feature enables one computer to supply power to another computer through a USB-C to USB-C cable. When ac power is available for only one computer, this feature enables both computers to get charged by ac power.

Before using the function, ensure that:

- The selected connectors support the P-to-P 2.0 charging function and power delivery function.
- **Always On USB** and **Charge in Battery Mode** are enabled in UEFI BIOS of both computers, so that the function works even when the computers are off or in hibernation mode. To enable **Always On USB** and **Charge in Battery Mode**:
  1. Enter the UEFI BIOS menu. See “Enter the UEFI BIOS menu” on page 27.
  2. Click **Config** → **USB** to enable **Always On USB** and **Charge in Battery Mode**.

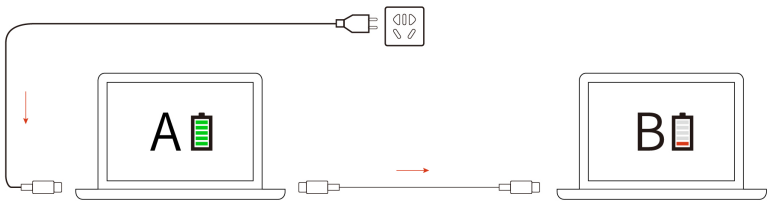

Note: The actual charging speed using the Lenovo-unique P-to-P 2.0 charging function varies depending on many factors, such as the remaining battery power of the computers, the wattage of the ac power adapter, and whether you are using the computers.

Set the power plan

For ENERGY STAR® compliant computers, the following power plan takes effect when your computers have been idle for a specified duration:

© Copyright Lenovo 2022

Table 1. Default power plan (when plugged into ac power)

• Turn off the display: After 5 minutes • Put the computer to sleep: After 20 minutes

To reset the power plan to achieve the best balance between performance and power saving:

1. Click on the battery symbol in the system menu drop down box and select **Power Settings**.
2. Choose or customize a power plan of your preference.

Connect to a Bluetooth-enabled device

You can connect all types of Bluetooth-enabled devices to your computer, such as a keyboard, a mouse, a smartphone, or speakers. To ensure the connection is successful, place the devices 10 meters (33 feet), at most, from the computer.

1. Turn on Bluetooth on the computer.
   - Click the system menu drop down (top right) and choose **Settings**.
   - Choose the Bluetooth menu and enable Bluetooth with the toggle button at the top.
2. Any discoverable devices will be shown in the **Devices** list.
3. Select a Bluetooth device, and then follow the on-screen instructions.

Your Bluetooth-enabled device and computer will automatically connect the next time if the two devices are in range of each other with Bluetooth turned on. You can use Bluetooth for data transfer or remote control and communication.

Enabling Nvidia proprietary drivers in Fedora (for selected models)

Your computer might come with an Nvidia card. The Nvidia proprietary drivers that will enable you to take advantage of performance benefits and new graphics functionality are not installed by default with Fedora.

To enable the proprietary drivers:

1. Launch the **Software** utility.
2. From the top right selection box choose Software Repositories.
3. Enable third party repositories.
4. Enable **RPM Fusion for Fedora → Nonfree → Nvidia Driver** and close the Software Repositories window.
5. Go to the updates tab and click on the curved arrow on the top left to refresh the software cache. Reboot the machine and launch the Software utility again.
6. Select **Add-ons** on the bottom right and choose the **Hardware Drivers** tab.
7. Select **NVIDIA Linux Graphics Driver**.
8. Select **Install** and wait for the installation to complete. This can take a few minutes.
9. Reboot and confirm Nvidia drivers are running using the **nvidia-settings** utility.

Accessories

This chapter provides instructions on how to use hardware accessories to expand your computer capabilities.

Purchase options

Lenovo has a number of hardware accessories and upgrades to help expand the capabilities of your computer. Options include memory modules, storage devices, network cards, port replicators or docking stations, batteries, power adapters, keyboards, mice, and more.

To shop at Lenovo, go to https://www.lenovo.com/accessories.

Chapter 4. Secure your computer and information

Lock the computer

Lock your computer to a desk, table, or other fixtures through a compatible security cable lock.

Note: The slot supports cable locks that conform to the Kensington MiniSaver® lock standards using Cleat™ locking technology. You are responsible for evaluating, selecting, and implementing the locking device and security feature. Lenovo is not responsible for the locking device and security feature. You can purchase the cable locks at https://smartfind.lenovo.com.

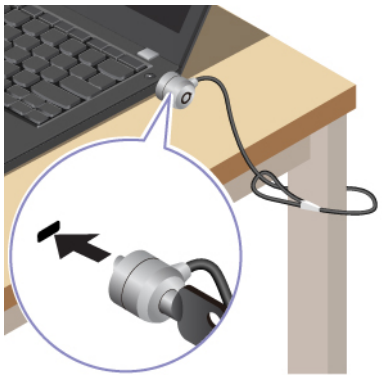

Use the fingerprint reader (for selected models)

If your computer comes with a fingerprint reader, you can use it to enroll your fingerprints. After enrollment, you can tap your finger on the fingerprint reader to log in to the system.

Enroll your fingerprints

Open the system menu and then click **Settings** ➜ **Users** ➜ **Fingerprint Login**. Then, follow the on-screen instructions to finish the enrollment.

During the enrollment, the fingerprints are associated with the user password automatically. It is recommended that you enroll more than one fingerprint in case of any injuries to your fingers.

Log in with your fingerprint

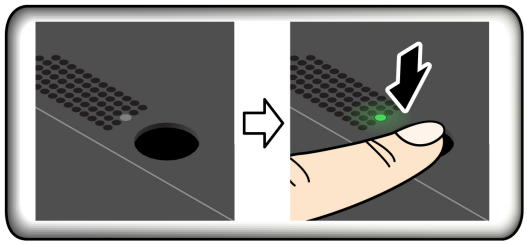

Maintain the fingerprint reader

To ensure that the fingerprint reader works correctly, do not:

- Scratch the surface of the reader with anything hard.
- Use or touch the reader with a wet, dirty, wrinkled, or injured finger.

© Copyright Lenovo 2022

Use privacy protection (for selected models)

Depending on the model, your computer might support the PrivacyGuard feature which keeps you secure without compromising your viewing experience.

https://support.lenovo.com/solutions/featurevideo

Use the PrivacyGuard feature

When the feature is enabled, it darkens screen and reduces visibility from side angles to protect screen content against visual hacking. By default, the PrivacyGuard feature is disabled. You can press Fn+D to enable it.

The privacy level of this feature varies depending on the screen brightness level, the contrast ratio, and the physical environment where you are using this feature.

- Press  to increase the privacy level.
- Press  to decrease the privacy level.

Use passwords

This section introduces types of passwords in UEFI (Unified Extensible Firmware Interface) BIOS (Basic Input/Output System) and how to set, change, and remove a password.

Password types

You can set a power-on password, supervisor password, system management password, or NVMe password in UEFI BIOS to prevent unauthorized access to your computer. However, you are not prompted to enter any UEFI BIOS password when your computer resumes from sleep mode.

Power-on password

If you set a power-on password, a window is displayed on the screen when you turn on the computer. Enter the correct password to use the computer.

Supervisor password

The supervisor password protects the system information stored in UEFI BIOS. When entering the UEFI BIOS menu, enter the correct supervisor password in the window prompted. You also can press Enter to skip the password prompt. However, you cannot change most of the system configuration options in UEFI BIOS.

If you have set both the supervisor password and power-on password, you can use the supervisor password to access your computer when you turn it on. The supervisor password overrides the power-on password.

System management password

The system management password can also protect the system information stored in UEFI BIOS like a supervisor password, but it has lower authority by default. The system management password can be set through the UEFI BIOS menu or through Windows Management Instrumentation (WMI) with the Lenovo client-management interface.

You can enable the system management password to have the same authority as the supervisor password to control security-related features. To customize the authority of the system management password through the UEFI BIOS menu:

1. Restart the computer. When the logo screen is displayed, press F1 to enter the UEFI BIOS menu.
2. Select **Security → Password → System Management Password Access Control**.
3. Follow the on-screen instructions.

If you have set both the supervisor password and the system management password, the supervisor password overrides the system management password. If you have set both the system management password and the power-on password, the system management password overrides the power-on password.

NVMe passwords

The NVMe password prevents unauthorized access to the data on the storage drive. When an NVMe password is set, you are prompted to type a correct password each time you try to access the storage drive.

- **Single Password**

  When a Single NVMe password is set, the user must enter the user NVMe password to access files and applications on the storage drive.

- **Dual Password (User + Admin)**

  The admin NVMe password is set and used by a system administrator. It enables the administrator to access any storage drive in a system or any computer connected in the same network. The administrator can also assign a user NVMe password for each computer in the network. The user of the computer can change the user NVMe password as desired, but only the administrator can remove the user NVMe password.

When prompted to enter an NVMe password, press F1 to switch between the admin NVMe password and user NVMe password.

Notes: The NVMe password is not available in the following situations:

- A Trusted Computing Group (TCG) Opal-compliant storage drive and a TCG Opal management software program are installed in the computer, and the TCG Opal management software program is activated.
- An eDrive storage drive is installed in the computer preinstalled with the Windows operating system.

Set, change, and remove a password

Before you start, print these instructions.

1. Restart the computer. When the logo screen is displayed, press F1 to enter the UEFI BIOS menu.
2. Select **Security → Password** by using the arrow keys.
3. Select the password type. Then, follow the on-screen instructions to set, change, or remove a password.

You should record all your passwords and store them in a safe place. If you forget any of your passwords, any potential repair actions required are not covered under warranty.

What to do if you forget your power-on password

If you forget your power-on password, do the following to remove the power-on password:

- If you have set a supervisor password and remember it:
  1. Restart the computer. When the logo screen is displayed, immediately press F1.
  2. Type the supervisor password to enter the UEFI BIOS menu.
  3. Select **Security → Password → Power-On Password** by using the arrow keys.

4. Type the current supervisor password in the **Enter Current Password** field. Then, leave the **Enter New Password** field blank, and press Enter twice.
5. In the Changes have been saved window, press Enter.
6. Press F10 to save changes and exit the UEFI BIOS menu.

- If you have not set a supervisor password, contact a Lenovo authorized service provider to have the power-on password removed.

What to do if you forget your NVMe password

If you forget your NVMe password (Single password) or both user and admin NVMe passwords (Dual password), Lenovo cannot reset your passwords or recover data from the storage drive. You can contact a Lenovo authorized service provider to have the storage drive replaced. A fee will be charged for parts and service. If the storage drive is a CRU (Customer Replaceable Unit), you can also contact Lenovo to purchase a new storage drive to replace the old one by yourself. To check whether the storage drive is a CRU and the relevant replacement procedure, see Chapter 6 “CRU replacement” on page 29.

What to do if you forget your supervisor password

If you forget your supervisor password, there is no service procedure to remove the password. You have to contact a Lenovo authorized service provider to have the system board replaced. A fee will be charged for parts and service.

What to do if you forget your system management password

If you forget your system management password, do the following to remove the system management password:

- If you have set a supervisor password and remember it:
  1. Restart the computer. When the logo screen is displayed, immediately press F1.
  2. Type the supervisor password to enter the UEFI BIOS menu.
  3. Select **Security → Password → System Management Password** by using the arrow keys.
  4. Type the current supervisor password in the **Enter Current Password** field. Then, leave the **Enter New Password** field blank, and press Enter twice.
  5. In the Changes have been saved window, press Enter.
  6. Press F10 to save changes and exit the UEFI BIOS menu.
- If you have not set a supervisor password, contact a Lenovo authorized service provider to have the system management password removed.

Use Power Loss Protection function (for selected models)

For models shipped with an NVMe (Non-Volatile Memory express) M.2 solid-state drive, the M.2 solid-state drive features the Lenovo-unique PLP (Power Loss Protection) function to avoid data loss or damage. On very rare occasions, your computer is not responding and you might have to shut down your computer by pressing and holding the power button for about seven seconds. In this case, the PLP function enables key data of your computer to be saved timely. However, there is no guarantee that all data is saved in any situation. To check the type of your M.2 solid-state drive:

1. Restart the computer. When the logo screen is displayed, press F10 to enter the Lenovo diagnostics window.
2. On the TOOLS tab, select **SYSTEM INFORMATION → STORAGE** using the arrow keys.
3. Locate the **Device Type** section to check the information.

Chapter 5. Configure advanced settings

UEFI BIOS

This section introduces what is UEFI BIOS and the operations you can perform in UEFI BIOS.

What is UEFI BIOS

UEFI BIOS is the first program that the computer runs when the computer is turned on. UEFI BIOS initializes the hardware components and loads the operating system and other programs. Your computer comes with a setup program with which you can change UEFI BIOS settings.

Enter the UEFI BIOS menu

Restart the computer. When the logo screen is displayed, press F1 to enter the UEFI BIOS menu.

Note: If you have set the supervisor password, enter the correct password when prompted. You also can press Enter to skip the password prompt and enter the UEFI BIOS menu. However, you cannot change the system configurations that are protected by the supervisor password.

Navigate in the UEFI BIOS interface

Attention: The default configurations are already optimized for you in **boldface**. Improper change of the configurations might cause unexpected results.

You can navigate in the UEFI BIOS interface by pressing the following keys:

F1	Display the General Help screen.
F9	Restore to the default settings.
F10	Save your configuration and exit.
F5	Change to a lower value.
F6	Change to a higher value.
↑ ↓	Locate an item.
← →	Select a tab.
Esc	Exit the submenu and return to the parent menu.
Enter	Enter the selected tab or submenu.

Change the startup sequence

1. Restart the computer. When the logo screen is displayed, press F1.
2. Select **Startup → Boot**. Then, press Enter. The default device order list is displayed.

   Note: No bootable device is displayed if the computer cannot start from any devices or the operating system cannot be found.
3. Set the startup sequence as desired.
4. Press F10 to save the changes and exit.

To change the startup sequence temporarily:

© Copyright Lenovo 2022

1. Restart the computer. When the logo screen is displayed, press F12.
2. Select the device that you want the computer to start from and press Enter.

Detect memory retraining

Memory retraining is a process to initialize the memory module and run diagnostic tests for the memory module in your computer. The memory retraining might occur during POST if any of the following situations is detected:

- Memory module replacement
- Total Memory Encryption setting change in UEFI BIOS
- UEFI BIOS update (Memory Reference Code [MRC] change)

When memory retraining occurs, the screen cannot display the progress information and might be blank. You might see the LED indicators on ESC, F1, and F4 blinking sequentially to indicate the progress. Do not press the power button to interrupt the process. Wait a few minutes until the logo screen is displayed.

Set the system date and time

1. Restart the computer. When the logo screen is displayed, press F1.
2. Select **Date/Time** and set the system date and time as desired.
3. Press F10 to save changes and exit.

Update UEFI BIOS

When you install a new program, device driver, or hardware component, you might need to update UEFI BIOS.

Download and install the latest UEFI BIOS update package by one of the following methods:

- Use the fwupdmgr or software utility to check LVFS for firmware updates.
- Go to https://pcsupport.lenovo.com and select the entry for your computer. Then, follow the on-screen instructions to download and install the latest UEFI BIOS update package.

Note: During the UEFI BIOS update process, Memory Reference Code (MRC) change might cause memory retraining. For details, see “Detect memory retraining” on page 28.

Chapter 6. CRU replacement

Customer Replaceable Units (CRUs) are parts that can be upgraded or replaced by the customer. The computers contain the following types of CRUs:

- **Self-service CRUs:** Refer to parts that can be installed or replaced easily by customer themselves or by trained service technicians at an additional cost.
- **Optional-service CRUs:** Refer to parts that can be installed or replaced by customers with a greater skill level. Trained service technicians can also provide service to install or replace the parts under the type of warranty designated for the customer's machine.

If you intend on installing a CRU, Lenovo will ship the CRU to you. CRU information and replacement instructions are shipped with your product and are available from Lenovo at any time upon request. You might be required to return the defective part that is replaced by the CRU. When return is required: (1) return instructions, a prepaid shipping label, and a container will be included with the replacement CRU; and (2) you might be charged for the replacement CRU if Lenovo does not receive the defective CRU within thirty (30) days of your receipt of the replacement CRU. For full details, see the Lenovo Limited Warranty documentation at https://www.lenovo.com/warranty/llw_02.

CRU list

The following is a list of CRUs of your computer.

Self-service CRUs

- ac power adapter*
- Power cord*
- Nano-SIM card tray*

Optional-service CRUs

- Base cover assembly
- Speaker assembly
- Memory module
- M.2 solid-state drive
- M.2 solid-state drive bracket
- Wireless WAN card*
- Keyboard

* for selected models

Note: Replacement of any parts not listed above, including the built-in rechargeable battery, must be done by a Lenovo-authorized repair facility or technician. Go to https://support.lenovo.com/partnerlocation for more information.

Disable the built-in battery

Before replacing any CRU, ensure that you disable the built-in battery.

To disable the built-in battery:

© Copyright Lenovo 2022

1. Restart your computer. When the logo screen is displayed, immediately press F1 to enter the UEFI BIOS menu.
2. Select **Config → Power**. The **Power** submenu is displayed.
3. Select **Disable Built-in Battery** and press Enter.
4. Select **Yes** in the Setup Confirmation window. The built-in battery is disabled and the computer turns off automatically. Wait three to five minutes to let the computer cool.

Replace a CRU

Follow the replacement procedure to replace a CRU.

Base cover assembly

Prerequisite

Before you start, read *Generic Safety and Compliance Notices* and print the following instructions.

Note: Do not remove the base cover assembly when your computer is connected to ac power. Otherwise, there might be a risk of short circuits.

For access, do the following:

1. Disable the built-in battery. See “Disable the built-in battery” on page 29.
2. Turn off the computer and disconnect the computer from ac power and all connected cables.
3. Remove the nano-SIM-card tray if your computer comes with one.
4. Close the computer display and turn over the computer.

Removal procedure

For L14 Gen 3

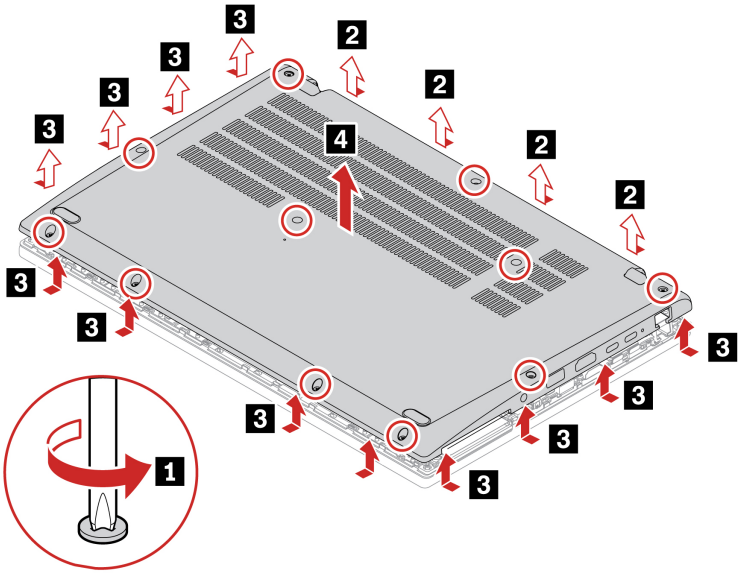

For L15 Gen 3

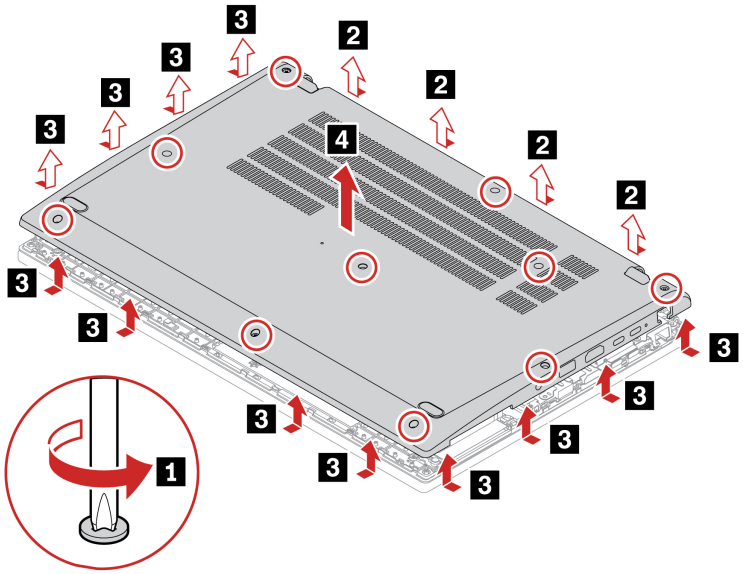

Installation procedure

For L14 Gen 3

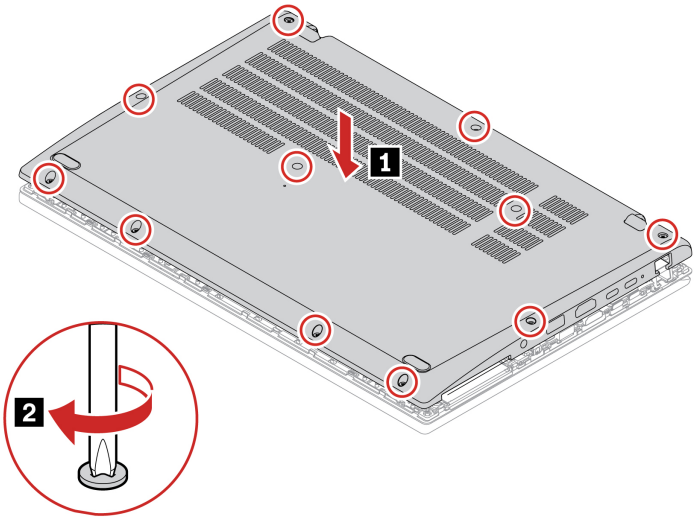

For L15 Gen 3

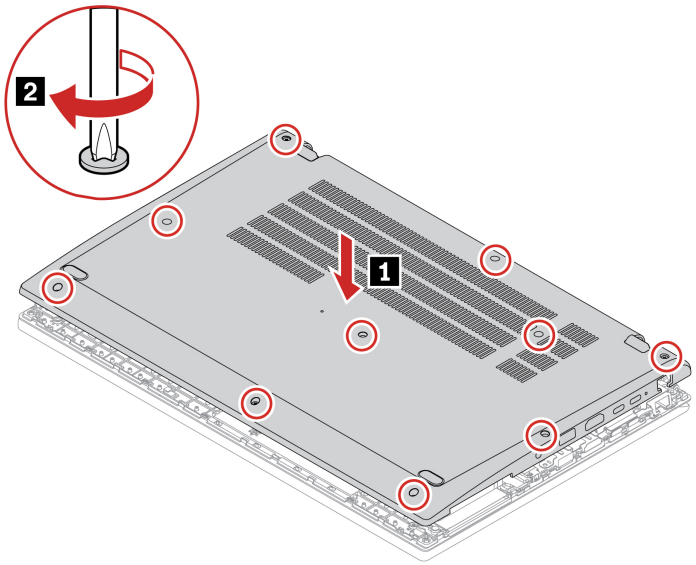

Troubleshooting

If the computer does not start up after you reinstall the base cover assembly, disconnect the ac power adapter and then reconnect it to the computer.

Wireless-WAN card (for selected models)

The following information is only for the computer with user-installable modules. Ensure that you use only a Lenovo-authorized wireless module specifically tested for this computer model. Otherwise, the computer will generate an error-code beep sequence when you turn on the computer.

Prerequisite

Before you start, read *Generic Safety and Compliance Notices* and print the following instructions.

Attention: Do not touch the contact edge of the wireless-WAN card. Otherwise, the wireless-WAN card might get damaged.

For access, do the following:

1. Disable the built-in battery. See “Disable the built-in battery” on page 29.
2. Turn off the computer and disconnect the computer from ac power and all connected cables.
3. Close the computer display and turn the computer over.
4. Remove the base cover assembly. See “Base cover assembly” on page 30.

Removal procedure

Note: A Mylar film might cover the wireless WAN card. To access the wireless WAN card, peel off the film first. Do not damage the mylar film and attach it in place after installation.

Type 1

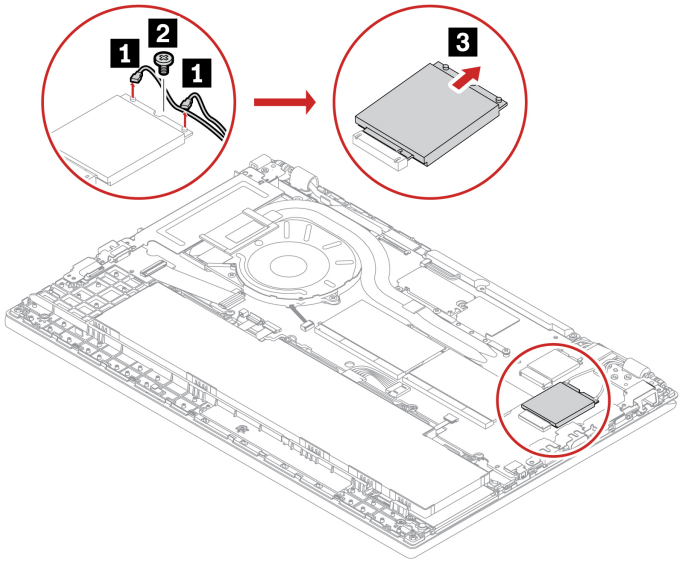

Type 2

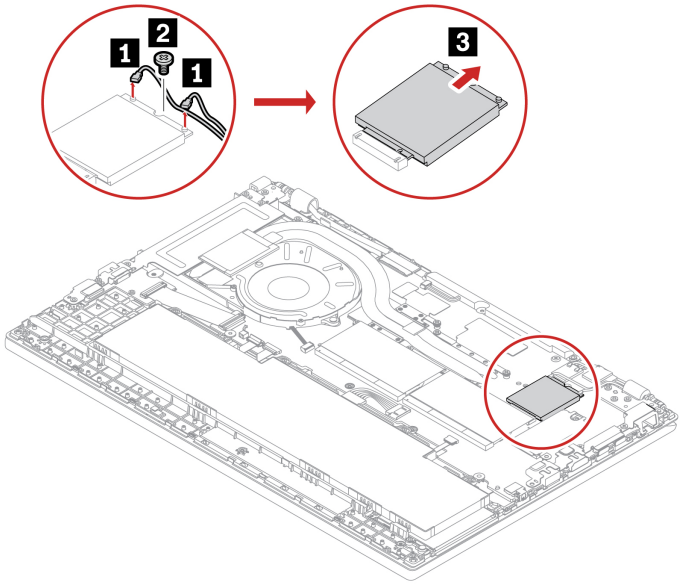

Installation procedure

Type 1

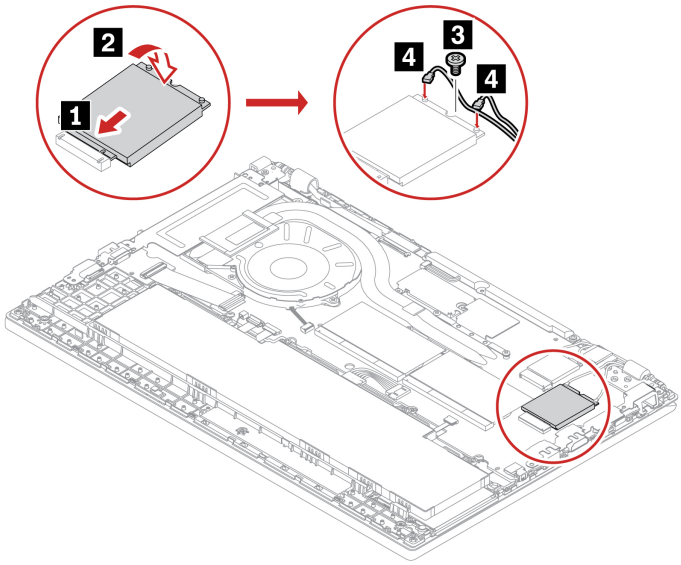

Type 2

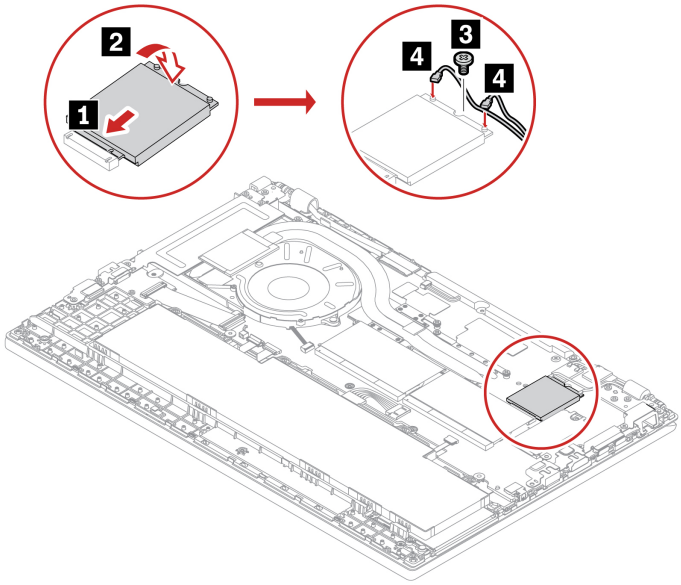

Memory module

Prerequisite

Before you start, read *Generic Safety and Compliance Notices* and print the following instructions.

Attention: Do not touch the contact edge of the memory module. Otherwise, the memory module might get damaged.

For access, do the following:

1. Disable the built-in battery. See “Disable the built-in battery” on page 29.
2. Turn off the computer and disconnect the computer from ac power and all connected cables.
3. Close the computer display and turn the computer over.
4. Remove the base cover assembly. See “Base cover assembly” on page 30.

Removal procedure

Note: A Mylar film might cover the memory module. To access the memory module, peel off the film first. Do not damage the mylar film and attach it in place after installation.

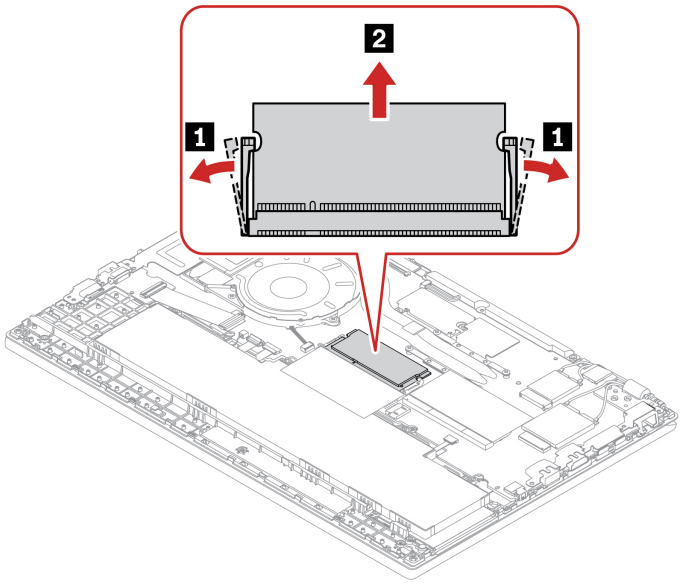

Note: Memory module replacement might cause memory retraining. For details, see “Detect memory retraining” on page 28.

M.2 solid-state drive

Prerequisite

Before you start, read *Generic Safety and Compliance Notices* and print the following instructions.

Attention: The M.2 solid-state drive is sensitive. Inappropriate handling might cause damage and permanent loss of data.

When handling the M.2 solid-state drive, observe the following guidelines:

- Replace the M.2 solid-state drive only for upgrade or repair. The M.2 solid-state drive is not designed for frequent changes or replacement.
- Before replacing the M.2 solid-state drive, make a backup copy of all the data that you want to keep.
- Do not apply pressure to the M.2 solid-state drive.
- Do not touch the contact edge or circuit board of the M.2 solid-state drive. Otherwise, the M.2 solid-state drive might get damaged.
- Do not make the M.2 solid-state drive subject to physical shocks or vibration. Put the M.2 solid-state drive on a soft material, such as cloth, to absorb physical shocks.

For access, do the following:

1. Disable the built-in battery. See “Disable the built-in battery” on page 29.
2. Turn off the computer and disconnect the computer from ac power and all connected cables.
3. Close the computer display and turn the computer over.
4. Remove the base cover. See “Base cover assembly” on page 30.

Removal procedure

Notes:

- A mylar film might cover the M.2 solid-state drive bracket. To access the M.2 solid-state drive, peel off the mylar film first. Do not damage the mylar film and attach it in place after installation.
- There might be thermal pads on the top and under the bottom of the M.2 solid-state drive. When replacing the M.2 solid-state drive, peel off the thermal pad on the M.2 solid-state drive and attach it in place after installing the new M.2 solid-state drive. Ensure that the thermal pad under the M.2 solid-state drive stays in its place and is not removed.

Type 1

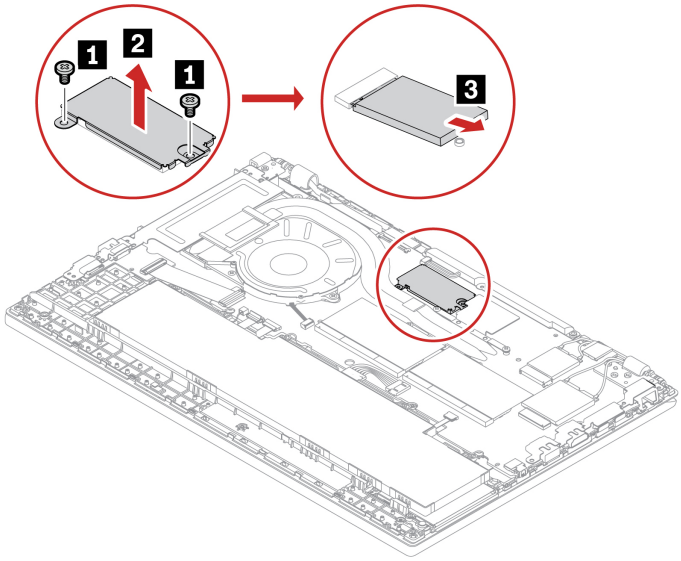

Type 2

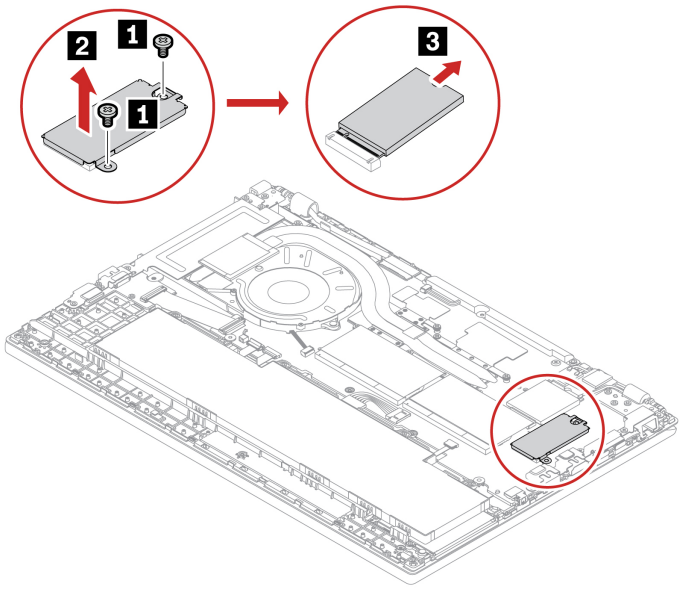

Speaker assembly

Prerequisite

Before you start, read *Generic Safety and Compliance Notices* and print the following instructions.

For access, do the following:

1. Disable the built-in battery. See “Disable the built-in battery” on page 29.
2. Turn off the computer and disconnect the computer from ac power and all connected cables.
3. Close the computer display and turn the computer over.
4. Remove the base cover assembly. See “Base cover assembly” on page 30.

Removal procedure

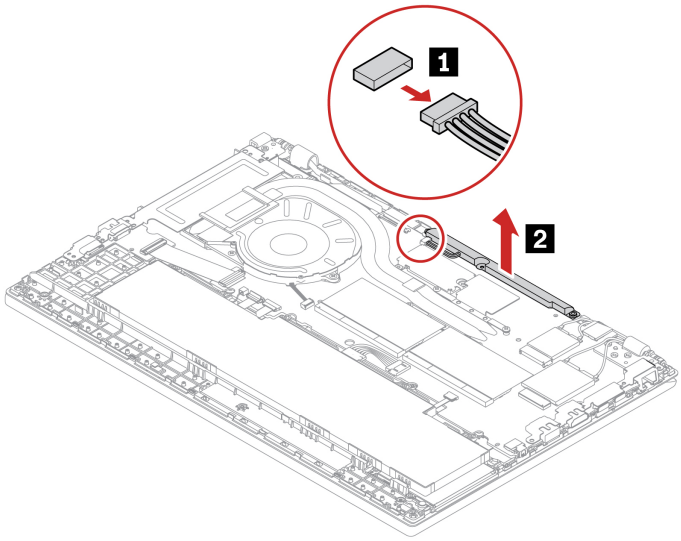

Keyboard

Prerequisite

Before you start, read *Generic Safety and Compliance Notices* and print the following instructions.

For access, do the following:

1. Disable the built-in battery. See “Disable the built-in battery” on page 29.
2. Turn off the computer and disconnect the computer from ac power and all connected cables.

Removal procedure

Note: You might be instructed to slide the keyboard frame forward or backward in some of the following steps. In this case, ensure that you do not press or hold the keys while sliding the keyboard frame. Otherwise, the keyboard frame cannot be moved.

1. Loosen the screws that secure the keyboard.

   For L14 Gen 3

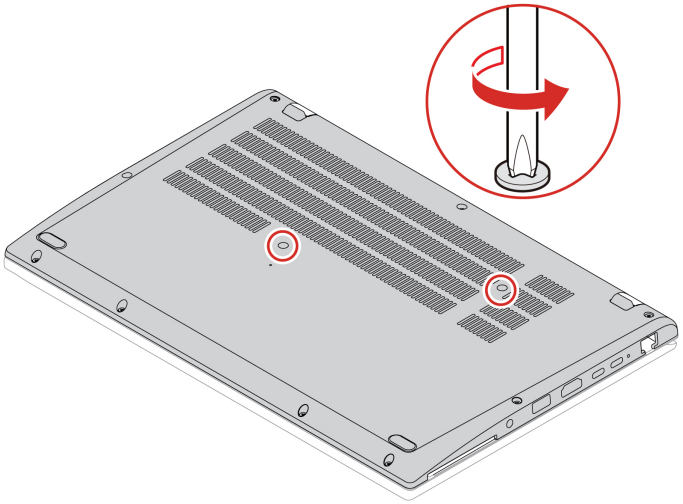

   For L15 Gen 3

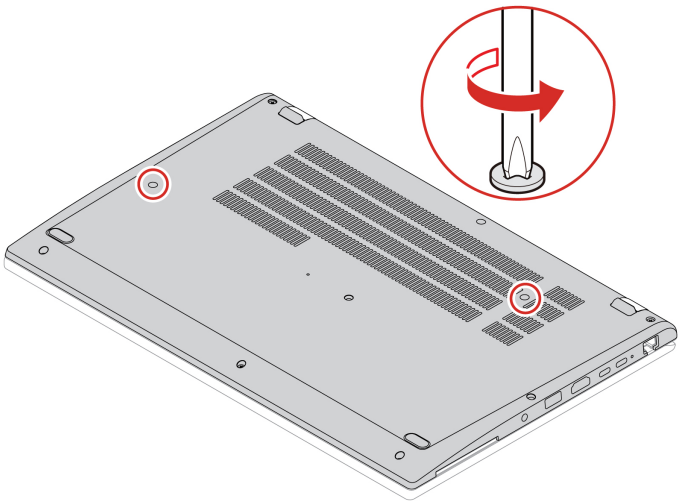

2. Turn over the computer and open the display. Push the keyboard in the direction as shown by arrows to release the latches from the keyboard bezel.

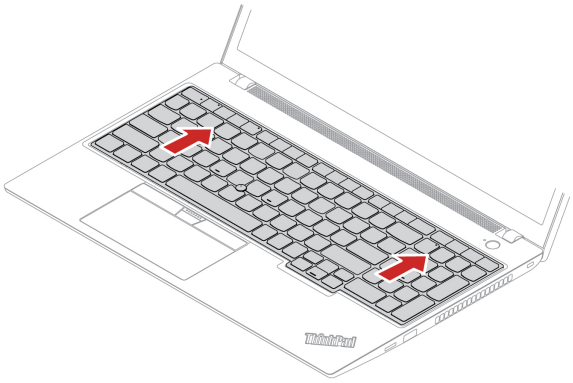

3. Pivot the keyboard slightly upward 1 and then turn over the keyboard 2.

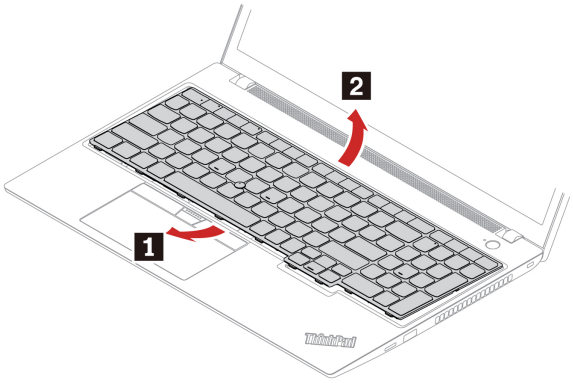

4. Put the keyboard on the palm rest as shown and detach the connectors. Then, remove the keyboard.

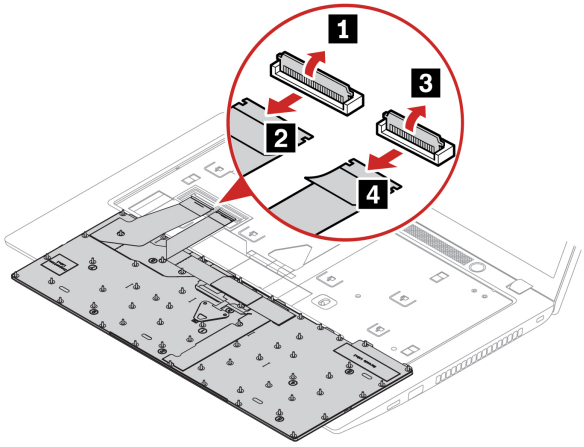

Installation procedure

Note: You might be instructed to slide the keyboard frame forward or backward in some of the following steps. In this case, ensure that you do not press or hold the keys while sliding the keyboard frame. Otherwise, the keyboard frame cannot be moved.

1. Attach the connectors and then turn over the keyboard.

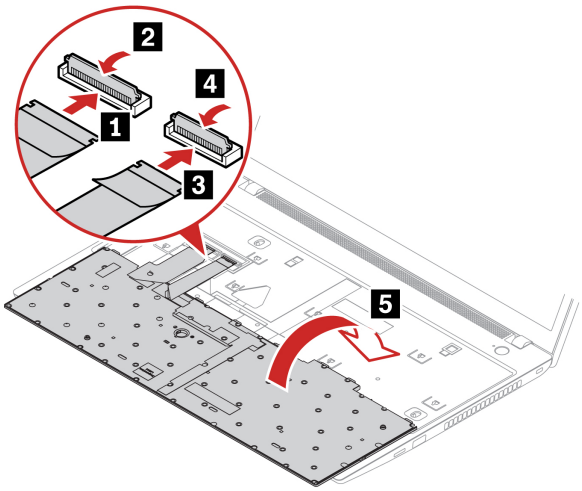

2. Insert the keyboard into the keyboard bezel as shown. Ensure that the top edge of the keyboard (the edge that is close to the display) is under the keyboard bezel.

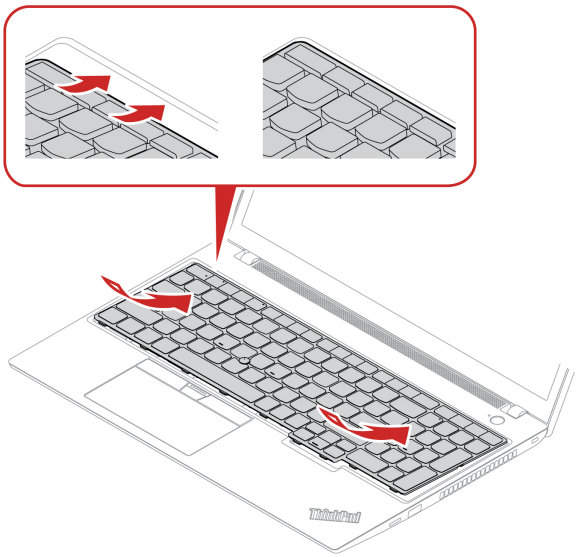

3. Slide the keyboard in the direction as shown. Ensure that the latches are secured under the keyboard frame.

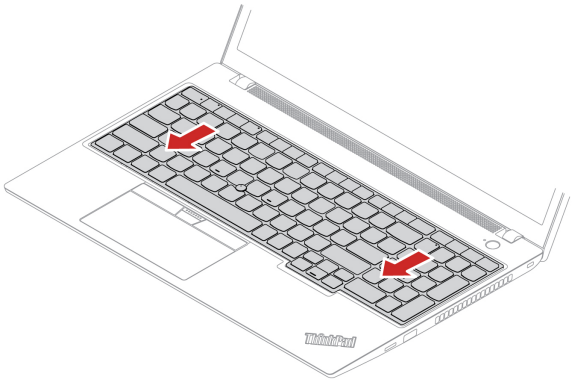

4. Tighten the screws to secure the keyboard.

   For L14 Gen 3

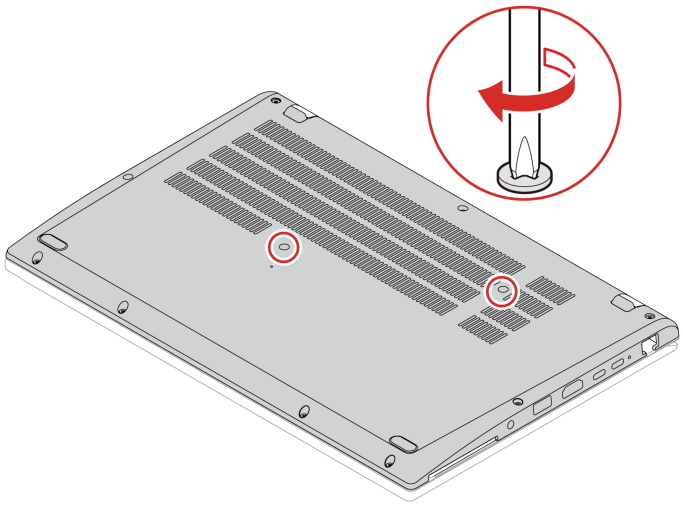

   For L15 Gen 3

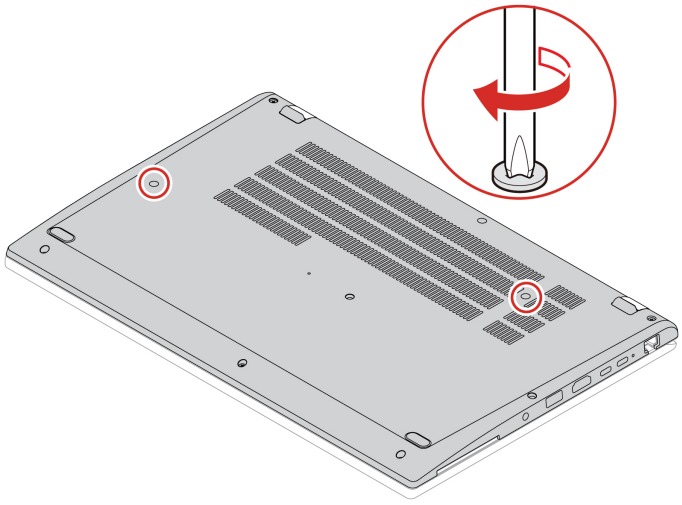

5. Connect the ac power adapter and all disconnected cables to the computer.

Chapter 7. Help and support

Frequently asked questions

How do I access **Settings**?	Open the system menu drop down (top right) and click **Settings**.
How do I turn off my computer?	From the system menu (top right) click ⏻, and then click **Power Off**.
What do I do if my computer stops responding.	1. Press and hold the power button until the computer turns off. Then, restart the computer. 2. If step 1 does not work: • For models with an emergency reset hole: Insert a straightened paper clip into the emergency reset hole to cut off power supply temporarily. Then, restart the computer with ac power connected. • For models without an emergency reset hole: – For models with the removable battery, remove the removable battery and disconnect all power sources. Then, reconnect to ac power and restart the computer. – For models with the built-in battery, disconnect all power sources. Press and hold the power button for about seven seconds. Then, reconnect to ac power and restart the computer.
What do I do if I spill liquid on the computer?	1. Carefully unplug the ac power adapter and turn off the computer immediately. The more quickly you stop the current from passing through the computer the more likely you will reduce damage from short circuits. **Attention:** Although you might lose some data or work by turning off the computer immediately, leaving the computer on might make your computer unusable. 2. Do not try to drain out the liquid by turning over the computer. If your computer has keyboard drainage holes on the bottom, the liquid will be drained out through the holes. 3. Wait until you are certain that all the liquid is dry before turning on your computer.
How do I enter the UEFI BIOS menu?	Restart the computer. When the logo screen is displayed, press F1 to enter the UEFI BIOS menu.
How do I disable my trackpad?	1. Open the system menu, and then click **Settings → Mouse & Touchpad**. 2. In the Touchpad section, turn off the **Touchpad** control.
Where can I get the latest device drivers and UEFI BIOS?	Use the Software application to check for updates. It should notify when new firmware is available on LVFS (https://fwupd.org/).

© Copyright Lenovo 2022

Error messages

If you see a message that is not included in the following table, record the error message first, then shut down the computer and call Lenovo for help. See “Lenovo Customer Support Center” on page 48.

Message	Solution
0190: Critical low-battery error	The computer turned off because the battery power is low. Connect the ac power adapter to the computer and charge the batteries.
0191: System Security - Invalid remote change requested	The system configuration change has failed. Confirm the operation and try again.
0199: System Security - Security password retry count exceeded.	This message is displayed when you enter a wrong supervisor password more than three times. Confirm the supervisor password and try again.
0271: Check Date and Time settings.	The date or the time is not set in the computer. Enter the UEFI BIOS menu and set the date and time.
210x/211x: Detection/Read error on HDDx/SSDx	The storage drive is not working. Reinstall the storage drive. If the problem still exists, replace the storage drive.
Error: The non-volatile system UEFI variable storage is nearly full.	**Note:** This error indicates that the operating system or programs cannot create, modify, or delete data in the non-volatile system UEFI variable storage due to insufficient storage space after POST. The non-volatile system UEFI variable storage is used by the UEFI BIOS and by the operating system or programs. This error occurs when the operating system or programs store large amounts of data in the variable storage. All data needed for POST, such as UEFI BIOS setup settings, chipset, or platform configuration data, are stored in a separate UEFI variable storage. Press F1 after the error message is displayed to enter the UEFI BIOS menu. A dialog asks for confirmation to clean up the storage. If you select “Yes”, all data that were created by the operating system or programs will be deleted except global variables defined by the Unified Extensible Firmware Interface Specification. If you select “No”, all data will be kept, but the operating system or programs will not be able to create, modify, or delete data in the storage. If this error happens at a service center, Lenovo authorized service personnel will clean up the non-volatile system UEFI variable storage using the preceding solution.
Fan error. Press ESC to startup with limited performance	The thermal fan might not work correctly. After the error message is displayed, press ESC within five seconds to start up the computer with limited performance. Otherwise, the computer will shut down immediately. If the problem still exists when you starts up next time, have your computer serviced.

Beep errors

Lenovo SmartBeep technology enables you to decode beep errors with your smartphone when a black screen occurs with beeps from your computer. To decode the beep error with Lenovo SmartBeep technology:

1. Go to https://support.lenovo.com/smartbeep or scan the following QR Code.



2. Download the proper diagnostic app and install it on your smartphone.
3. Run the diagnostic app and place the smartphone near the computer.
4. Press Fn on your computer to emit the beep again. The diagnostic app decodes the beep error and shows possible solutions on the smartphone.

Note: Do not attempt to service a product yourself unless instructed to do so by the Customer Support Center or product documentation. Only use a Lenovo-authorized service provider to repair your product.

Self-help resources

Use the following self-help resources to learn more about the computer and troubleshoot problems.

Access product documentation

- *Safety and Warranty Guide*
- *Setup Guide*
- This *User Guide*
- *Regulatory Notice*

Visit the Lenovo support Web site

https://pcsupport.lenovo.com

- Drivers and software
- Diagnostic solutions
- Product and service warranty
- Product and parts details
- Knowledge base and frequently asked questions

Access the Lenovo Limited Warranty

This product is covered by the terms of the Lenovo Limited Warranty (LLW), version L505-0010-02 08/2011. You can view the LLW in a number of languages from the following Web site. Read the Lenovo Limited Warranty at:

https://www.lenovo.com/warranty/llw_02

The LLW also is preinstalled on the computer. To access the LLW, go to /opt/Lenovo

If you cannot view the LLW either from the Web site or from your computer, contact your local Lenovo office or reseller to obtain a printed version of the LLW.

Access Linux distributions

Linux is an open-source operating system, and popular Linux distributions include Ubuntu and Fedora.

To learn more about the Ubuntu operating system, go to:

https://www.ubuntu.com

To learn more about the Fedora operating system, go to:

https://getfedora.org/

Get support information

If you need help, service, technical assistance, or more information about the Linux operating system or other applications, contact the provider of the Linux operating system or the provider of the application. If you need the service and support for hardware components shipped with your computer, contact Lenovo.

To access the latest *User Guide* and *Safety and Warranty Guide*, go to:

https://pcsupport.lenovo.com

Access open-source information

This device includes software made publicly available by Lenovo, including software licensed under the General Public License and/or the Lesser General Public License (the open source software).

You may obtain a copy of the corresponding source code for any such open source software licensed under the General Public License and/or the Lesser General Public License (or any other license requiring us to make a written offer to provide corresponding source code to you) from Lenovo for a period of three years without charge except for the cost of media, shipping, and handling, upon written request to Lenovo. This offer is valid to anyone in receipt of this Device.

You may send your request in writing to the address below accompanied by a check or money order for $15 to:

Lenovo Legal Department
Attn: Open Source Team / Source Code Requests
8001 Development Dr.
Morrisville, NC 27560

Please include the version of the OS and the version of the Linux Kernel pre-shipped on this Device as part of your request. Be sure to provide a return address.

The open source software is distributed in hope it will be useful, but WITHOUT ANY WARRANTY; without even the implied warranty of MERCHANTABILITY or FITNESS FOR A PARTICULAR PURPOSE. See for example the GNU General Public License and/or the Lesser General Public License for more information.

To view additional information regarding licenses, acknowledgments and required copyright notices for the open source software shipped on your Device, go to `/usr/share/licences/*`.

Call Lenovo

If you have tried to correct the problem yourself and still need help, you can call Lenovo Customer Support Center.

Before you contact Lenovo

Prepare the following before you contact Lenovo:

1. Record the problem symptoms and details:
   - What is the problem? Is it continuous or intermittent?
   - Any error message or error code?
   - What operating system are you using? Which version?
   - Which software applications were running at the time of the problem?
   - Can the problem be reproduced? If so, how?
2. Record the system information:
   - Product name
   - Machine type and serial number

The following illustration shows where to find the machine type and serial number of your computer.

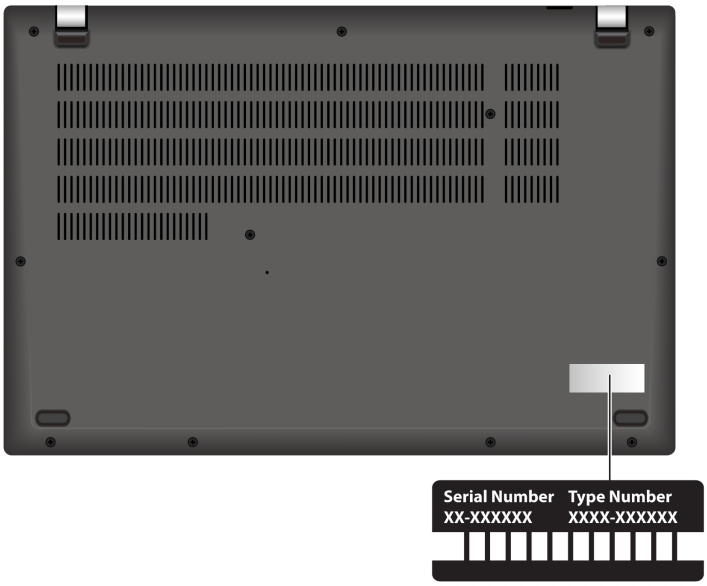

Lenovo Customer Support Center

During the warranty period, you can call Lenovo Customer Support Center for help.

Telephone numbers

For a list of the Lenovo Support phone numbers for your country or region, go to https://pcsupport.lenovo.com/supportphonelist for the latest phone numbers.

Note: Phone numbers are subject to change without notice. If the number for your country or region is not provided, contact your Lenovo reseller or Lenovo marketing representative.

Services available during the warranty period

- Problem determination - Trained personnel are available to assist you with determining if you have a hardware problem and deciding what action is necessary to fix the problem.
- Lenovo hardware repair - If the problem is determined to be caused by Lenovo hardware under warranty, trained service personnel are available to provide the applicable level of service.
- Engineering change management - Occasionally, there might be changes that are required after a product has been sold. Lenovo or your reseller, if authorized by Lenovo, will make selected Engineering Changes (ECs) that apply to your hardware available.

Services not covered

- Replacement or use of parts not manufactured for or by Lenovo or nonwarranted parts
- Identification of software problem sources
- Configuration of UEFI BIOS as part of an installation or upgrade
- Changes, modifications, or upgrades to device drivers
- Installation and maintenance of network operating systems (NOS)
- Installation and maintenance of programs

For the terms and conditions of the Lenovo Limited Warranty that apply to your Lenovo hardware product, go to:

- https://www.lenovo.com/warranty/llw_02
- https://pcsupport.lenovo.com/warrantylookup

Purchase additional services

During and after the warranty period, you can purchase additional services from Lenovo at https://pcsupport.lenovo.com/warrantyupgrade.

Service availability and service name might vary by country or region.

Appendix A. Compliance information

For compliance information, refer to *Regulatory Notice* at https://pcsupport.lenovo.com and *Generic Safety and Compliance Notices* at https://pcsupport.lenovo.com/docs/generic_notices.

Certification-related information

Product name	Compliance ID	Machine type(s)
• ThinkPad L14 Gen 3 • ThinkPad L14 Gen 3 LTE[1] • ThinkPad L14 Gen 3 SWG[1] • ThinkPad L14 Gen 3 SWG LTE[1] • ThinkPad L14 Gen 3 AMD[1] • ThinkPad L14 Gen 3 AMD LTE[1]	• Intel models: – TP00133A – TP00133A0[2] – TP00133A1[2] – TP00133A2[2] – TP00133A3[2] – TP00133A4[2] • AMD models: – TP00133B – TP00133B0[2] – TP00133B1[2]	• Intel models: 21C1 and 21C2 • AMD models: 21C5 and 21C6
• ThinkPad L15 Gen 3 • ThinkPad L15 Gen 3 SWG[1] • ThinkPad L15 Gen 3 AMD[1]	• Intel models: – TP00134A – TP00134A0[2] – TP00134A1[2] – TP00134A2[2] – TP00134A3[2] – TP00134A4[2] • AMD models: – TP00134B – TP00134B0[2] – TP00134B1[2]	• Intel models: 21C3 and 21C4 • AMD models: 21C7 and 21C8

[1] for mainland China only / [2] for India only

Further compliance information related to your product is available at https://www.lenovo.com/compliance.

Locate the UltraConnect wireless antennas

Your computer has an UltraConnect™ wireless antenna system. You can enable wireless communication wherever you are.

© Copyright Lenovo 2022

The following illustration shows the antenna locations on your computer:

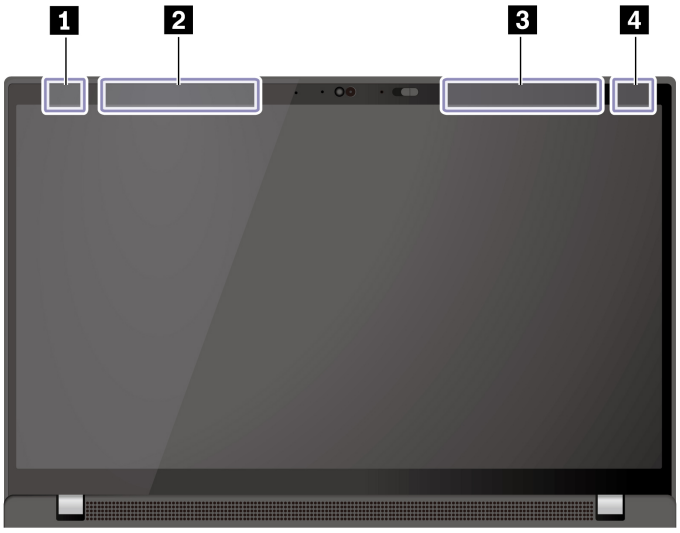

1 Wireless LAN antenna (main)
2 Wireless WAN antenna (main, for selected models)
3 Wireless WAN antenna (auxiliary, for selected models)
4 Wireless LAN antenna (auxiliary)

Operating environment

Maximum altitude (without pressurization)

3048 m (10 000 ft)

Temperature

- Operating: 5°C to 35°C (41°F to 95°F)
- Storage and transportation in original shipping packaging: -20°C to 60°C (-4°F to 140°F)
- Storage without packaging: 5°C to 43°C (41°F to 109°F)

Note: When you charge the battery, its temperature must be no lower than 10°C (50°F).

Relative humidity

- Operating: 8% to 95% at wet-bulb temperature 23°C (73°F)
- Storage and transportation: 5% to 95% at wet-bulb temperature 27°C (81°F)

Appendix B. Notices and trademarks

Notices

Lenovo may not offer the products, services, or features discussed in this document in all countries. Consult your local Lenovo representative for information on the products and services currently available in your area. Any reference to a Lenovo product, program, or service is not intended to state or imply that only that Lenovo product, program, or service may be used. Any functionally equivalent product, program, or service that does not infringe any Lenovo intellectual property right may be used instead. However, it is the user's responsibility to evaluate and verify the operation of any other product, program, or service.

Lenovo may have patents or pending patent programs covering subject matter described in this document. The furnishing of this document does not give you any license to these patents. You can send license inquiries, in writing, to:

Lenovo (United States), Inc.
8001 Development Drive
Morrisville, NC 27560
U.S.A.
Attention: Lenovo Director of Licensing

LENOVO PROVIDES THIS PUBLICATION "AS IS" WITHOUT WARRANTY OF ANY KIND, EITHER EXPRESS OR IMPLIED, INCLUDING, BUT NOT LIMITED TO, THE IMPLIED WARRANTIES OF NON-INFRINGEMENT, MERCHANTABILITY OR FITNESS FOR A PARTICULAR PURPOSE. Some jurisdictions do not allow disclaimer of express or implied warranties in certain transactions, therefore, this statement may not apply to you.

Changes are made periodically to the information herein; these changes will be incorporated in new editions of the publication. To provide better service, Lenovo reserves the right to improve and/or modify the products and software programs described in the manuals included with your computer, and the content of the manual, at any time without additional notice.

The software interface and function and hardware configuration described in the manuals included with your computer might not match exactly the actual configuration of the computer that you purchase. For the configuration of the product, refer to the related contract (if any) or product packing list, or consult the distributor for the product sales. Lenovo may use or distribute any of the information you supply in any way it believes appropriate without incurring any obligation to you.

The products described in this document are not intended for use in implantation or other life support applications where malfunction may result in injury or death to persons. The information contained in this document does not affect or change Lenovo product specifications or warranties. Nothing in this document shall operate as an express or implied license or indemnity under the intellectual property rights of Lenovo or third parties. All information contained in this document was obtained in specific environments and is presented as an illustration. The result obtained in other operating environments may vary.

Lenovo may use or distribute any of the information you supply in any way it believes appropriate without incurring any obligation to you.

Any references in this publication to non-Lenovo Web sites are provided for convenience only and do not in any manner serve as an endorsement of those Web sites. The materials at those Web sites are not part of the materials for this Lenovo product, and use of those Web sites is at your own risk.

© Copyright Lenovo 2022

Any performance data contained herein was determined in a controlled environment. Therefore, the result obtained in other operating environments may vary significantly. Some measurements may have been made on development-level systems and there is no guarantee that these measurements will be the same on generally available systems. Furthermore, some measurements may have been estimated through extrapolation. Actual results may vary. Users of this document should verify the applicable data for their specific environment.

This document is copyrighted by Lenovo and is not covered by any open source license, including any Linux agreement(s) which may accompany software included with this product. Lenovo may update this document at any time without notice.

For the latest information or any questions or comments, contact or visit the Lenovo Web site:

https://support.lenovo.com

Trademarks

LENOVO, LENOVO logo, THINKPAD, THINKPAD logo, TRACKPOINT, and ULTRACONNECT are trademarks of Lenovo. Intel, and Thunderbolt are trademarks of Intel Corporation or its subsidiaries in the U.S. and/or other countries. Linux is the registered trademark of Linus Torvalds in the U.S. and other countries. Ubuntu is a registered trademark of Canonical Ltd. “Fedora” is a registered trademark of Red Hat, Inc. The terms HDMI and HDMI High-Definition Multimedia Interface are trademarks or registered trademarks of HDMI Licensing LLC in the United States and other countries. Wi-Fi, Wi-Fi Alliance, and Miracast are registered trademarks of Wi-Fi Alliance. USB-C is a trademark of USB Implementers Forum. All other trademarks are the property of their respective owners.


Lenovo