

ProDVX FM-10

Instruction Manual

PRO DVX | ALWAYS ON

www.prodvx.com

ProDVX FM-10 (8080950)

Flush Mount

Overview



The FM-10 is a metal flush mount that allows you to mount our 10” IPPC and APPC models in a drywall or other material. With the mounting holes and drywall fixtures, the FM-10 can be used in various situations and scenarios. The Flush mount is also easy to remove for maintenance.

Package Contents

- 1 x FM-10
- 4 x Magnets
- 4 x Plastic Washers
- 4 x Screws



ProDVX reserves the right to change or update any information in this document without notice.

Mounting Instructions

1. Use the dimensions on the drawing to draw the boundaries of the hole.

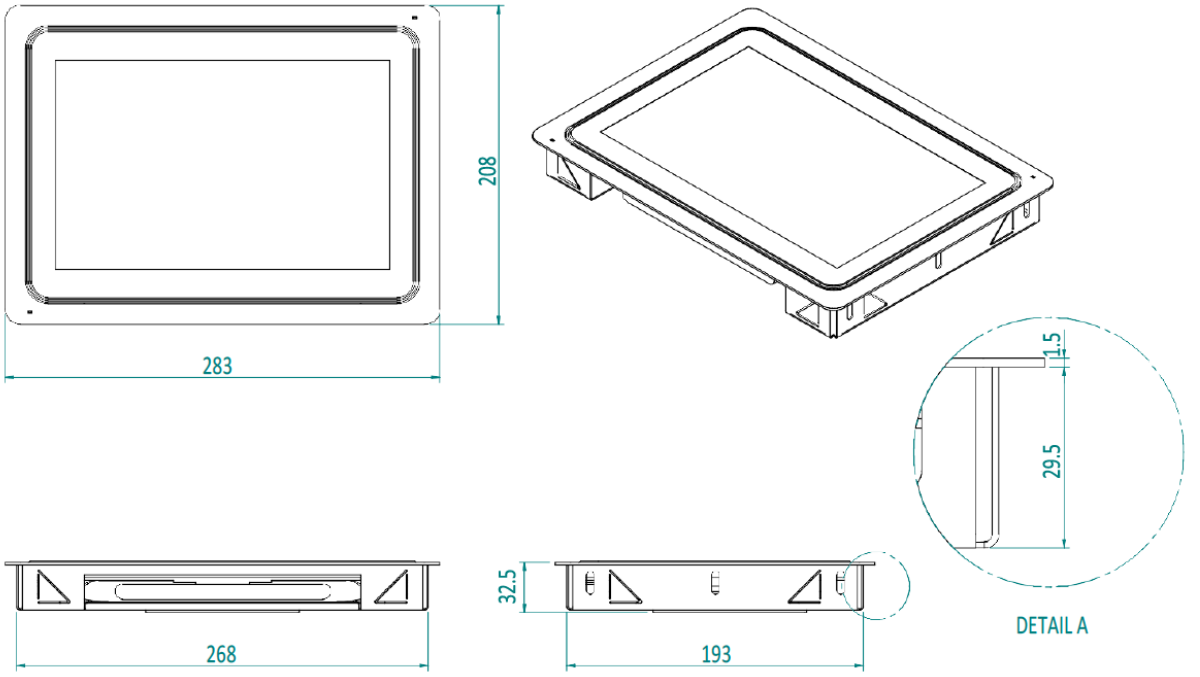

2. Make a hole in the drywall or other material.
3. Pull the Ethernet cable through the hole in the wall and thread it through the FM-10.

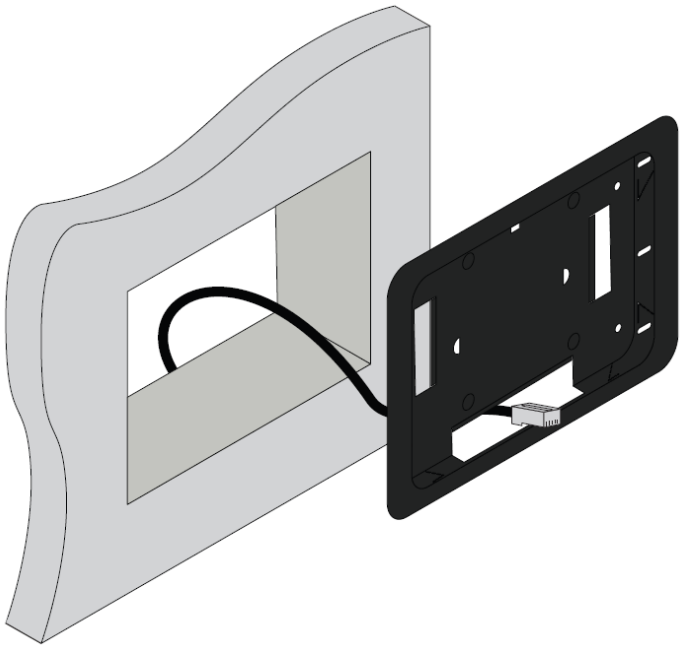

4. Slide the FM-10 into the hole in the wall until it is pressed fully against the wall.
5. Press a screwdriver into the triangle metal flaps of the unit to secure the FM-10 into the wall. There are 8 triangles to press in, two on each side.

ProDVX reserves the right to change or update any information in this document without notice.

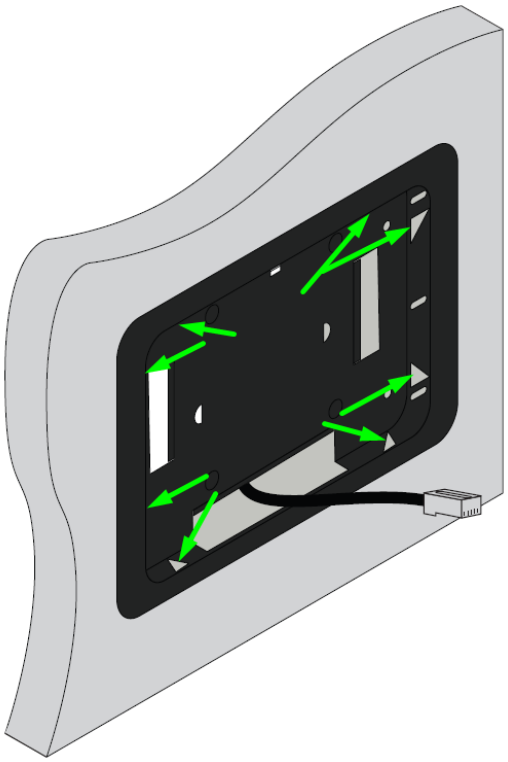

6. Thread the screw into the magnet first, followed by the washer.
7. Screw the screws with magnets into the back of the ProDVX 10” Panel PC (VESA-75 hols).

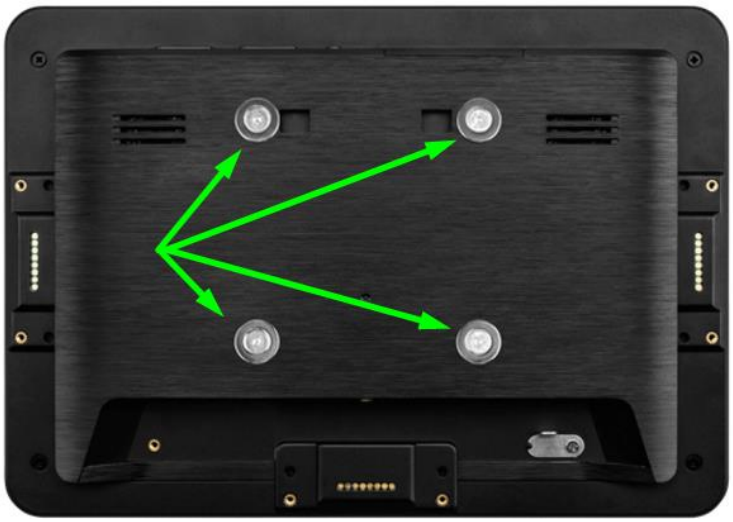

8. Connect the Ethernet cable into the port on the back of the ProDVX 10” Panel PC.
9. Slide the Ethernet cable back into the wall as the ProDVX 10” Panel PC is mounted into the FM-10.

Panel Removal

If the panel needs to be removed from the flush mount, it can be done using two methods:

- Press a finger into the top right corner. The left side of the panel will pop out and the panel can be removed.



- Attach the included suction cup to the ProDVX 10” Panel PC and gently pull the panel off the FM-10.

