

Rosa Velvet

TQE-2527P

User manual

2.5” STOREGE ENCLOSURE - SATA
USB 3.0 / 3.1 Gen 1

Content

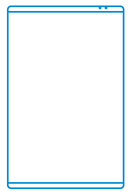

1 x Storage enclosure

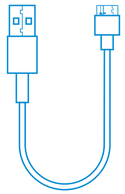

1 x Connection cable

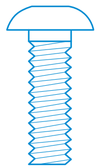

2 x Screws

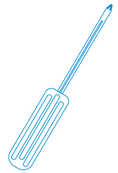

1 x Mini screwdriver



1 x Usar manual

System requirements, hard disk partition and file format

TooQ 2,5” storage enclosure is Plug & Play and allows you to connect your SATA disk (HDD or SSD) through a USB 3.0 / 3.1 Gen 1 port to any device Windows, MacOS o Linux. Please refer to the product warranty here.

The system will not recognise the new hard drives until you create partitions and format them. This operation can be performed on systems based on:

Windows: Equipment (Right button) → Manage → Storage → Disk administrator.

Mac: Finder → Go → Utilities → Disk Utility.

Linux: System → System Administration → Disk Utility.

The PCB board of the enclosure is very sensitiva to
electrostatic discharges. Be sure to ralease static electricity before mounting the storage enclosure

In case of hard disk failure:
- Check that the disk partition and file formal partition have been performed.
- Check that the hard disk is in optimum condition. If this is not the case, contact the manufacturer or distributor.

Parts of the external enclosure

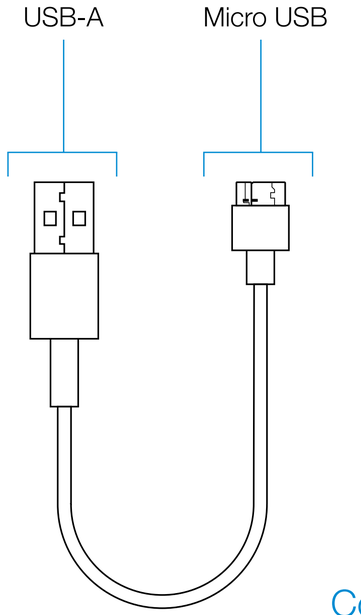

Connection cable

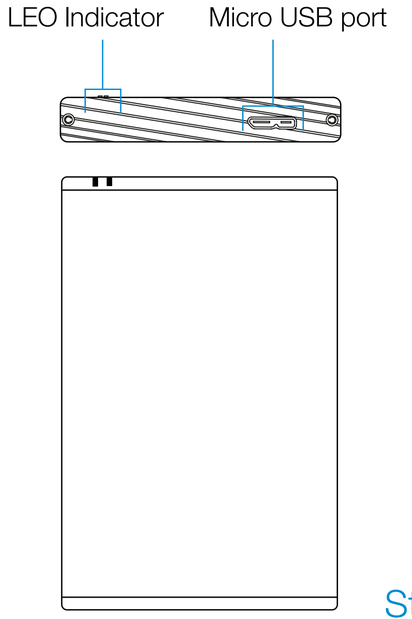

Storage enclosure HDD/SSD

Installation and commissioning

Loasen the two screws to open the storage enclosure. Take off the PCB board and connect it to the disk.

Caution: *Do not touch the chipset on the PCB board or the guarantee will be void.*

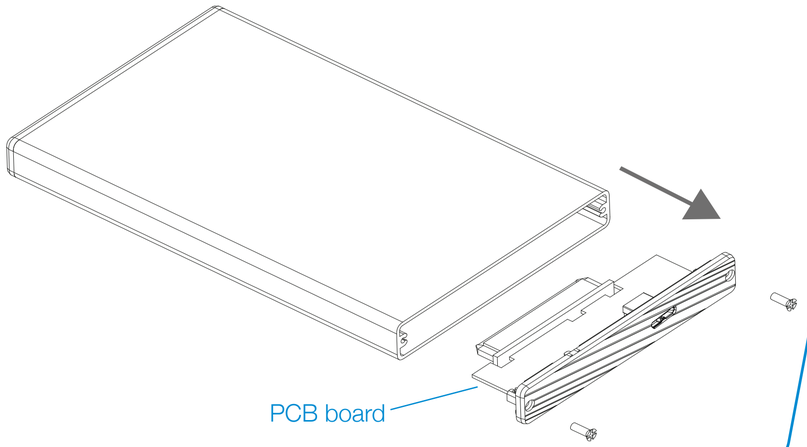

1

Carefully place the PCB board with the disk installed inside the enclosure.

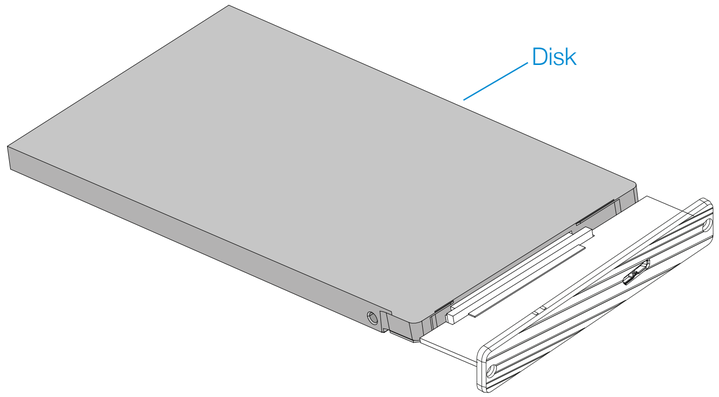

2

Installation and commissioning

Place the two screws to fix the cover.

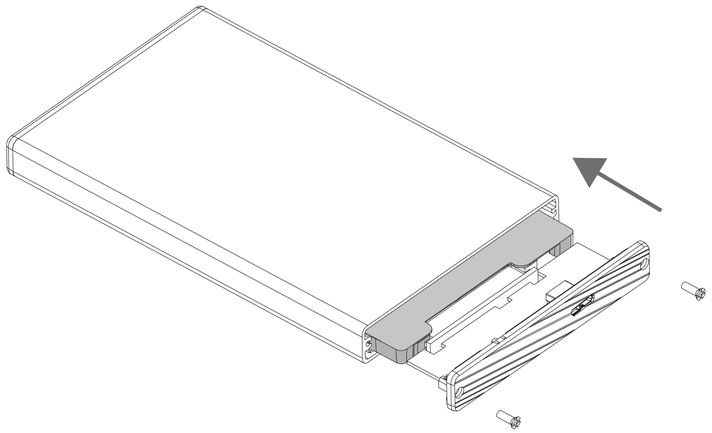

3

Connect the cable with the USB-A end to the device and the Micro USB to the storage enclosure. The transfer speed will be adapted to the version of the USB port on the device.

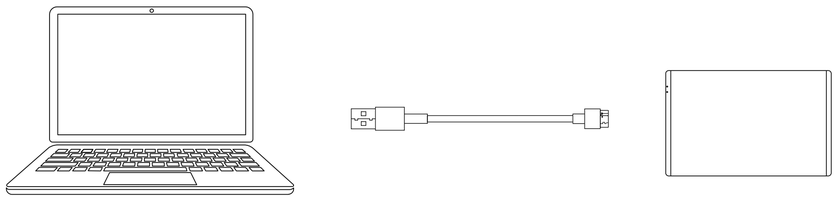

4

Keep up with the latest news!

Follow us on social networks





©2021 by TooQ Technology, S.L.
All Rights Reserved.
tooq.com