Hisense

DATASHEET

55B4E31T

55" DIGITAL SIGNAGE DISPLAY

Opening hours' operation 16/7

Hisense Digital Signage Display's are ideal for retail and business environments. The products are the perfect backbone of a digital broadcasting platform in supermarkets, restaurants, stadiums, shopping malls and office buildings. A combination of seamless design and enhanced 500 nits brightness will ensure your digital content vividly stands out from the crowd.



KEY FEATURES

Opening hours' operation

Designed with dual-core System on Chip (SoC) technology the Hisense B4E31T series can be used for broadcasting both offline and cloud based content 16 hours a day, 7 days a week. You are completely free to choose your CMS to help display your advertising. And if necessary the internal memory will allow you to save and play media as a PC-less solution for instant broadcast.

Smart CMS

Hisense's CMS platform allows you to edit and arrange playlists, making content management easy and user-friendly. It supports all rich media content in synchronous playback over a multitude of commercial displays. Besides this status monitoring and real-time control will allow you to quickly and centrally respond to any emergency.

Landscape & portrait

Both landscape and portrait orientations are possible, providing you with endless creative and functional possibilities to fulfil your commercial or informative goals.

4K Ultra HD

The 4K Ultra HD picture quality* ensures perfect colour and rich details in all possible broadcasting surroundings, ranging from shops, to restaurants and office buildings.

178° Wide viewing angle

The extra wide 178° viewing angle is a perfect fit for shoppers, employees or visitors that will view B4E31T displays from diverse angles while passing by.

500 nits

With 500 nits maximum brightness for the panels are well equipped to make your content vividly stand out in any commercial location.

Customization

Hisense's B4E31T displays support a variety of on-screen customisations such as custom startup logo, startup animation, wallpaper and many more. Creating a uniform look & feel for all people working with or viewing the displays

Automatic time zone

When connected to the Internet each display will automatically synchronise to its local timezone. Making sure scheduled media broadcast is always in sync.

SPECIFICATIONS

55B4E31T - 55” Digital Signage Display		
Panel	Backlight	DLED
	Size	55"
	Resolution	3840 x 2160
	Refresh rate	60HZ
	Brightness	500 nits (typ)
	Contrast(typ)	1200:1 (typ)
	Orientation	Landscape & Portrait
	MTBF	30000Hrs(min)
	Operation Hours	7Day*16Hour
Operating System	OS	Android 8.0
Connectivity	WIFI	2.4G/5G
	LAN	10/100Mbps RJ45*1
	TF Card	TF*1
	USB	USB 2.0*1 USB3.0*1
	Input	HDMI 2.0*2 Audio in
	Output	headphone Jack*1
Speaker	Built in speaker	8W x2
Control Method	Remote	IR
	RS232	RS232*1 (RJ45)
Environment	Operation Temperaturer	0 - 40°
	Operation Humidity	20% - 80%
Power	Input	AC 100V-240V@50/60HZ
	Power Consumption	210W
	Standby Consumption	<0.5W (standby mode)
Physical	Bezel Color	Black
	Set Dimension(WxHxD)	1241.8mm*712.6mm*69.7mm
	Bezel width (T/L/R/B)	T/B/L/R:13.9mm
	Net Weight	16.6kg
	Packing Dimension (WxHxD)	1350*160*860mm
	Packed Weight	21.8kg
	VESA	400mm*400mm
Certification	Standard Certification	CB,CE,ERP,RCM

DIMENSIONS IN MM

55” | 1241.8 x 712.6 x 69.7 mm
16.6 kg

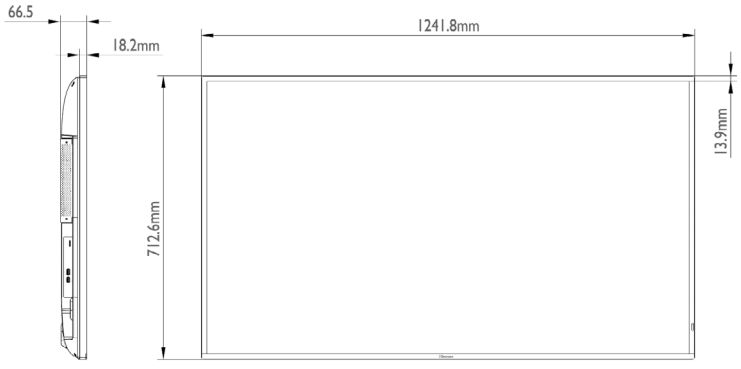

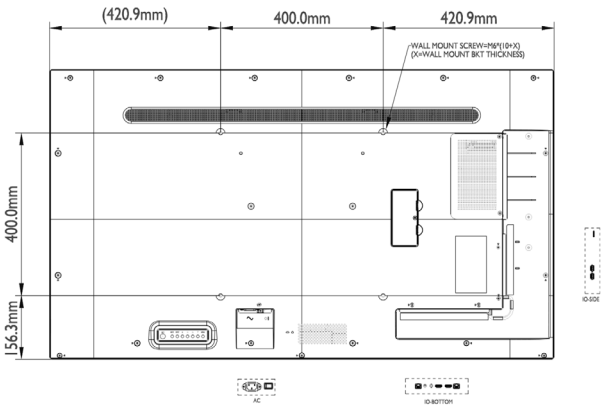

More information can be found at www.hisense-b2b.com