SMART Board® **6000S (C) series with iQ**

SBID-6265S-C
SBID-6275S-C
SBID-6286S-C



DISPLAY

Screen sizes (diagonal)	65", 75", 86"
Backlight	LED
Aspect ratio	16:9
Maximum display resolution	4K UHD (3840 × 2160)
Refresh rate	60 Hz
Lifespan	≥ 50,000 hours
Brightness (maximum)	≥ 350 cd/m^2
Response time	≤ 8 ms
Viewing angle	178°
Glass	Fully heat-tempered, anti-glare
Glass thickness	4 mm
Frame color	White
Convenience buttons	Power, home, volume, screen shade, freeze frame
Sensors	Proximity, ambient light, infrared, room temperature and humidity
Audio	2 integrated 20 W speakers

INTERACTIVE EXPERIENCE

Touch technology	HyPr Touch™ with InGlass™
Touch features	Tool Explorer™ Simultaneous Tool Differentiation™ Object Awareness™ Pen ID™ Silktouch™
Typical response time	9 ms
Frame rate	150 Hz
Accuracy	1.5 mm (over 90% area)
Minimum object size	5 mm
Multitouch capabilities	20 – Windows® and Mac 10 – Chrome OS™
Tools included	Pens (×2) Erasers (×2)
Tool holders	Intelligent, magnetic, frame-mounted
Optional tools	Multicolor four-pen bundle Magic pen Highlighter pen Stamps and cubes

SOFTWARE

iQ built-in Android™ experience	Included
SMART Notebook® basic	Included
SMART Ink® and SMART Product Drivers	Included
SMART Remote Management	Subscription for length of the included warranty
SMART Learning Suite	Bonus 1-year subscription

smarttech.com
smarttech.com/contact

© 2021 SMART Technologies ULC. All rights reserved. SMART Board, SMART Notebook, SMART Ink, HyPr Touch, Tool Explorer, Simultaneous Tool Differentiation, Object Awareness, Pen ID, Silktouch, smarttech, the SMART logo and all SMART taglines are trademarks or registered trademarks of SMART Technologies ULC in the U.S. and/or other countries. The Adopted Trademarks HDMI, HDMI High-Definition Multimedia Interface, and the HDMI Logo are trademarks or registered trademarks of HDMI Licensing Administrator, Inc. in the United States and other countries. All other third-party product and company names may be trademarks of their respective owners. This product and/or use thereof is covered by one or more of the following U.S. patents: www.smarttech.com/patents. Models and specifications may vary by region. Please contact your local representative for details. Contents are subject to change without notice. August 25, 2021.

iQ BUILT-IN ANDROID EXPERIENCE

Operating system	Android version 8.0
Memory	4 GB DDR
Storage	32 GB
Digital whiteboard	✓
Web browser	✓
Screen sharing	✓
Other features	SMART Whiteboard Personalized home screen and settings Live input preview Interactive widgets Templates, graphic organizers, and manipulatives File and app libraries Google Drive™ and OneDrive™ access
Object Awareness supported	✓
Ability to run third-party applications	✓
Cloud storage access	✓
Languages supported	Chinese (simplified), Chinese (traditional), Czech, Danish, Dutch, English, Estonian, Finnish, French, German, Greek, Hungarian, Italian, Japanese, Korean, Latvian, Lithuanian, Norwegian, Polish, Portuguese, Romanian, Russian, Slovak, Slovenian, Spanish, Swedish, Ukrainian, Vietnamese, Welsh
Updates	Automatic over-the-air (OTA)

PC COMPUTING

OPS support	✓
OPS-C support	✓
PC module power supported OPS	60 W
Optional computing modules	SMART OPS PC with Windows 10 Pro SMART Chromebox

INPUTS	Front	Back
OPS PC accessory slot (60 W devices)	–	1
HDMI® 2.0 with HDCP 1.4 and HDCP 2.2 support	1	2
VGA video	–	1
Stereo 3.5 mm	–	1
RS-232	–	1
RJ45	–	2
USB Type-C 4K @60Hz Display Port Alternate Mode, USB3 Dual Role Data Transfer Functionality, touch, and digital audio; 60W power delivery	1	–
USB 2.0 Type-A	–	1
USB 3.0 Type-A	1	1
USB 3.0 Type-B	1	3

OUTPUTS	Front	Back
HDMI 2.0	–	1
Stereo 3.5 mm	–	1
S/PDIF	–	1
RS-232	–	1

INCLUDED CABLES AND ACCESSORIES	Qty
Country-specific power cable	1
16' 5" (5 m) USB 2.0 cable	1
Pens (red and black)	2
Erasers	2
External dual-band 2.4 and 5 GHz antennae	2
Remote control	1
AAA batteries	2
WM-SBID-200 wall mount	1
Illustrated installation instructions	1
Important information document	1

CONNECTIVITY

Wired	RJ45 (×2) 100baseT
Wi-Fi	IEEE 802.11 a/b/g/n/ac with 2 × 2 MIMO (both 2.4 and 5 GHz bands) supporting WEP, WPA, WPA2 PSK, and 802.1X EAP authentication protocols
Bluetooth	4.2 dual mode

STORAGE AND OPERATING REQUIREMENTS

Power requirements	100V to 240V AC, 50 Hz to 60 Hz
Operating temperature	41–95°F (5–35°C)
Storage temperature	-4–140°F (-20–60°C)
Humidity	5–80% relative humidity, non-condensing

POWER CONSUMPTION

Typical	65": 92 W 75": 141 W 86": 172 W
Standby	< 0.5 W

CERTIFICATION AND COMPLIANCE*

US / Canada	UL, FCC, ISED, TSCA, CONEG Packaging, Proposition 65
EU / EEA / EFTA / UK	CE, UKCA, LVD, CB, EMCD, RED, REACH, RoHS, Battery, WEEE, Packaging, POP, Ecodesign
Australia / New Zealand	RCM
Performance standards	ENERGY STAR®, HDMI

PURCHASING INFORMATION

Order number: SBID-6265S-C	SMART Board 6065S-C interactive display with iQ and SMART Learning Suite
Order number: SBID-6275S-C	SMART Board 6075S-C interactive display with iQ and SMART Learning Suite
Order number: SBID-6286S-C	SMART Board 6086S-C interactive display with iQ and SMART Learning Suite
Order number: TS-4PEN-MC	Tool Explorer multicolor 4-pen bundle (orange, purple, green, blue) with magnetic penwell
Order number: TS-4CUBE-LEARN	Tool Explorer Learn 4-Cube Bundle
Order number: TS-4CUBE-MATH	Tool Explorer Math 4-Cube Bundle
Order number: TS-4STAMP-PLAY	Tool Explorer Play 4-Stamp Bundle
Order number: TS-PEN-HLITE	Tool Explorer double-ended Highlighter (yellow & green)
Order number: TS-PEN-MAGIC	Tool Explorer Magic Pen
Optional accessories	See smarttech.com/accessories

WARRANTY

SMART Assure warranty	Includes advanced hardware replacement and access to onsite support. Terms and conditions vary by region. Contact your local reseller or distributor for information and visit smarttech.com/warranty.

CABLE REQUIREMENTS

HDMI	Certified premium high speed HDMI (18 Gbps) Maximum length: 23' (7 m)
USB 2.0	USB 2.0 certified Hi-Speed (480 Mbps) support Maximum length: 16' (5 m)
USB 3.0	USB 3.0 certified SuperSpeed (5 Gbps) support Maximum length: 9' (3 m)
USB Type-C	USB 3.2 Gen 1 certified SuperSpeed (5 Gbps) support Maximum length: 6' (2 m)
More information	See smarttech.com/kb/171414

*Product availability may vary by region.
This product has received additional certifications not listed here.

INSTALLATION, DIMENSIONS, AND WEIGHTS

NOTES

- All dimensions ± 1/8" (0.3 cm). All weights ± 2 lb. (0.9 kg).
- Product ships upright.

SBID-6265S-C

Dimensions

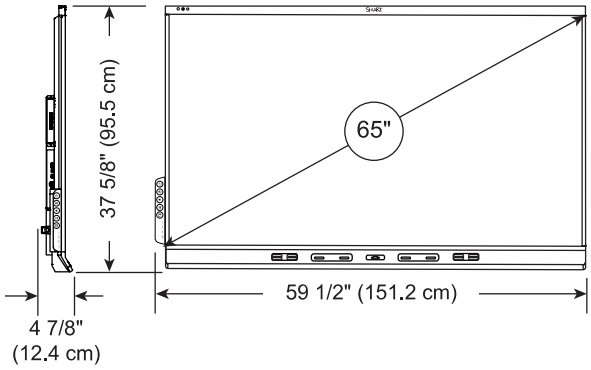

Weight

112 lb. (51 kg)

Shipping dimensions (including pallet)

67 1/8" × 46 1/2" × 10 3/8"
(170.4 cm × 118.1 cm × 26.4 cm)

Shipping weight

159 lb. (72 kg)

VESA mount

M8, 600 × 400 mm

Handles

2

SBID-6275S-C

Dimensions

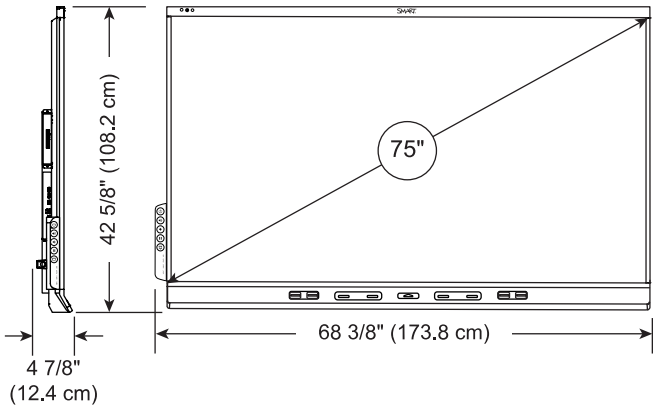

Weight

143 lb. (65 kg)

Shipping dimensions (including pallet)

76" × 51 1/2" × 10 3/8"
(193.1 cm × 130.8 cm × 26.4 cm)

Shipping weight

194 lb. (88 kg)

VESA mount

M8, 600 × 400 mm

Handles

2

SBID-6286S-C

Dimensions

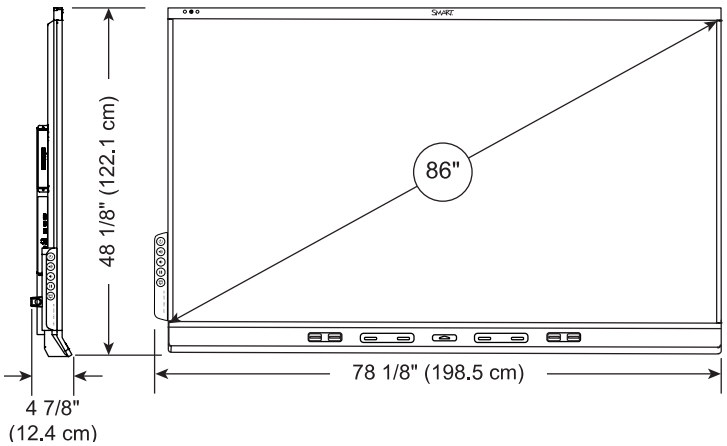

Weight

185 lb. (84 kg)

Shipping dimensions (including pallet)

86" × 57" × 10 3/8"
(218.6 cm × 144.7 cm × 26.4 cm)

Shipping weight

243 lb. (110 kg)

VESA mount

M8, 600 × 400 mm

Handles

2