

MASTER VALUE LEDs pot LV

MASTER LED spot VLE D 5.8-35W MR16 927 60D

Philips MASTER VALUE MR16 is the series of Low Voltage (12VAC) Halogen MR16 replacements. Not only does it employs Philips' patented solution to guarantee the broadest possible compatibility with standard 12V Halogen electronic transformers. It also delivers beam intensity which is equivalent to the 50W Philips Halogen MR16 lamps. The form-factor of Philips MASTER Value LED MR16 guarantees a 100% form on the back-side of the lamp (exact form with Halogen lamps.)

Warnings and Safety

- Operating temperature range is between -20° C and 45° C ambient
- Only to apply in dry or damp locations and most of open fixtures with lamp-holders that offer sufficient space (10 mm free air space)
- Not intended for use with emergency light fixtures or exit lights

Product data

General Information	
Cap-Base	GU5.3 [GU5.3]
EU RoHS compliant	Yes
Nominal Lifetime (Nom)	25000 h
Switching Cycle	50000X

Light Technical	
Color Code	927 [CCT of 2700K]
Beam Angle (Nom)	60 °
Luminous Flux (Nom)	450 lm
Luminous Intensity (Nom)	600 cd
Color Designation	Warm White (WW)
Correlated Color Temperature (Nom)	2700 K

Luminous Efficacy (rated) (Nom)	77.00 lm/W
Color Consistency	<6
Color Rendering Index (Nom)	90
LLMF At End Of Nominal Lifetime (Nom)	70 %
Luminous Flux in 90° Cone (Rated)	450 lm

Operating and Electrical	
Input Frequency	- Hz
Power (Nom)	5.8 W
Lamp Current (Nom)	510 mA
Wattage Equivalent	35 W
Starting Time (Nom)	0.5 s
Warm Up Time to 60% Light (Nom)	0.5 s

MASTER VALUE LEDspot LV

Power Factor (Nom)	0.7
Voltage (Nom)	ac electronic 12 V

Temperature	
T-Case Maximum (Nom)	85 °C

Controls and Dimming	
Dimmable	Yes

Approval and Application	
Energy Efficiency Label (EEL)	A+
Suitable For Accent Lighting	Yes
Energy Consumption kWh/1000 h	7 kWh

Product Data	
Full product code	871951430724700
Order product name	MASTER LED spot VLE D 5.8-35W MR16 927 60D
EAN/UPC - Product	8719514307247
Order code	929002492802
Numerator - Quantity Per Pack	1
Numerator - Packs per outer box	10
Material Nr. (12NC)	929002492802
Net Weight (Piece)	0.045 kg

Dimensional drawing

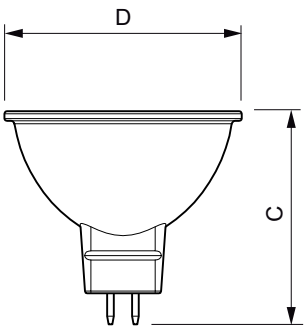

MR16 12V 5.5-35W 450lm 60D 2700K GU5.3 D

Product	D	C
MASTER LED spot VLE D 5.8-35W MR16 927 60D	50.5 mm	45.5 mm

Photometric data

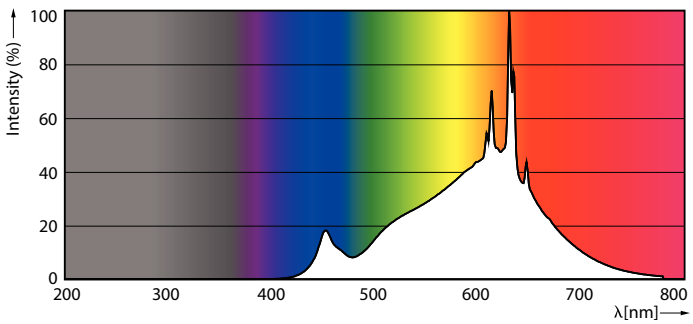

LEDspots MAS 5,8W MR16 GU5,3 927 60D

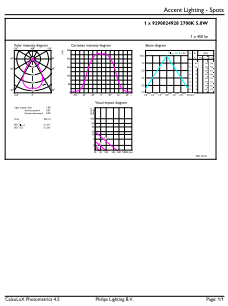

LEDspots MAS 5,8W MR16 GU5,3 927 60D

MASTER VALUE LEDspot LV

Photometric data

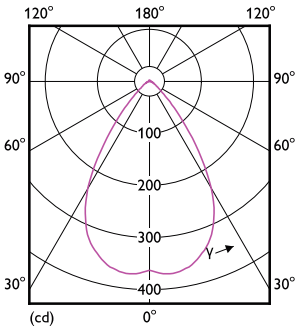

LEDspots MAS 5,8W MR16 GU5,3 927 60D

Lifetime

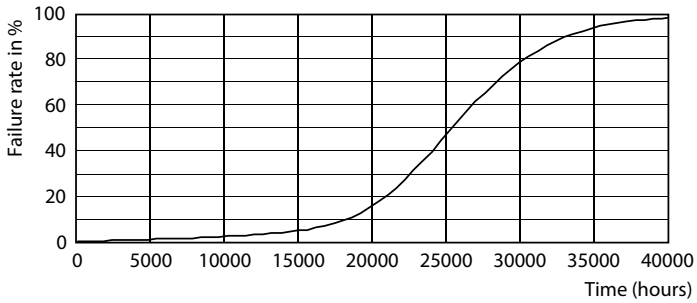

LEDspots LED 25K

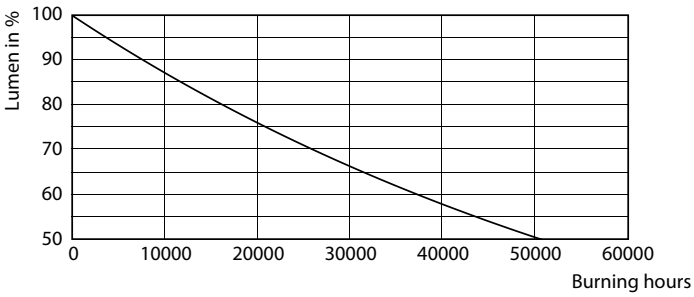

LEDspots LMP 25K

© 2021 Signify Holding All rights reserved. Signify does not give any representation or warranty as to the accuracy or completeness of the information included herein and shall not be liable for any action in reliance thereon. The information presented in this document is not intended as any commercial offer and does not form part of any quotation or contract, unless otherwise agreed by Signify. Philips and the Philips Shield Emblem are registered trademarks of Koninklijke Philips N.V.