LANVIEW PROFESSIONAL NETWORK SOLUTIONS

# 19" Rack cabinet 42U x D800 mm

**Item no.: LVR243027**



## PRODUCT OVERVIEW

Floor-standing 600mm wide rack cabinet designed for the installation of both cabling and equipment. Suitable for multiple applications including data centers, server rooms, local area networking (LAN) cabling and hardware.

The side panels are removable and the cabinet is prepared for installation of fan tray, shelves and power giving you the option to create the cabinet that best suits your needs.

Access Panels at the top and bottom of the cabinet for easy cable access and added versatility.

Adjustable cage nut rails, levelers and castors are included. Please note that the castors are only for positioning the empty rack, they are not meant to support the rack when it's loaded with equipment.

## SPECIFICATIONS

| | |
|---|---|
| **Type** | Floor-standing rack cabinet |
| **Modular spacing** | 19" |
| **Rack capacity** | 42U |
| **Color** | Black |
| **Material** | Steel |
| **Front door** | Tempered Glass |
| **Front door key lock** | Yes |
| **Removable front door** | Yes |
| **Removable side panels** | Yes |
| **Back door** | Plate |
| **Castors and feet** | 4 adjustable feet |
| **Mounting profile** | Front and rear |
| **Rail thickness** | 1.2mm |

| | |
|---|---|
| **Ventilation** | Passive, space for fan tray |
| **Industry standard compliance** | Comply with ANSI/EIA RS-310-D, DIN41491; PART1, IEC297-2, DIN41494; PART7, GB/T3047.2-92 standard. Compatible with metric, ETSI and 19' international standard |
| **Width** | 600 mm |
| **Height** | 2080 mm |
| **Depth** | 800 mm |
| **Maximum weight capacity** | 300 kg |
| **Package** | Flat-pack |





© 2021, Lanview®. All rights reserved.

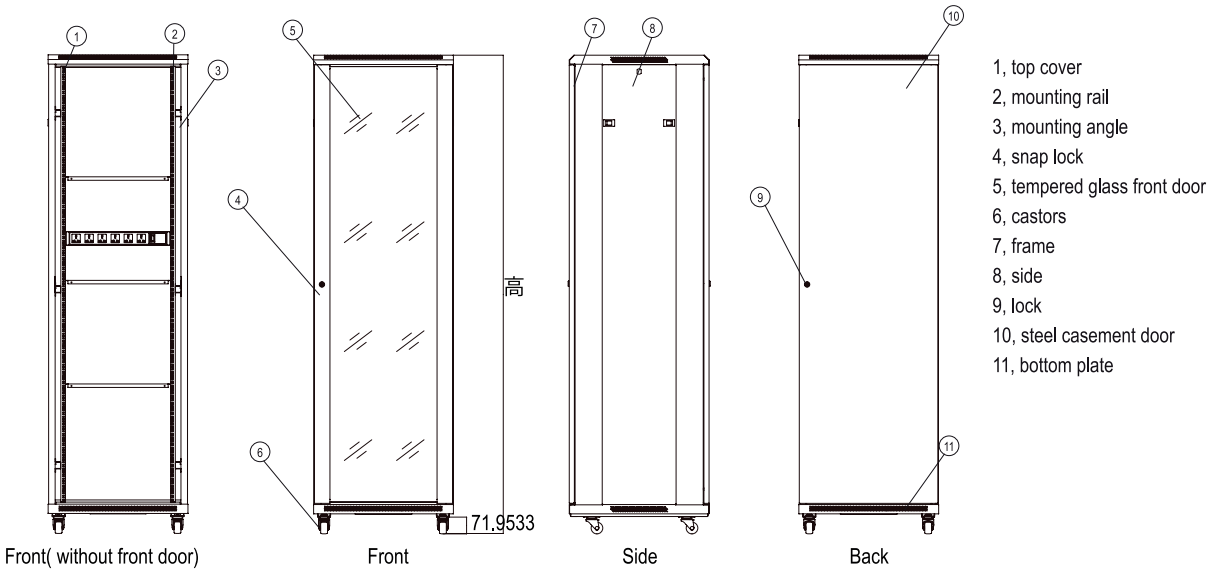


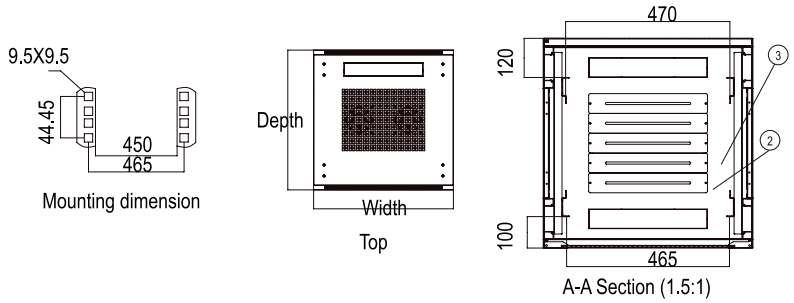


| S/N | SPECIFICATION | QTY | UNIT | MATERIAL | SURFACE FINISH | REMARK |
|---|---|---|---|---|---|---|
| 1 | Top cover | 1 | Pcs | 0.8mm cold rolled steel | Powder coated | - |
| 2 | Rack | 2 | Pcs | 0.8mm cold rolled steel | Powder coated | - |
| 3 | Front door | 1 | Pcs | 0.8mm cold rolled steel | Powder coated | B type door |
| 4 | Side panel | 2 | Pcs | 0.8mm cold rolled steel | Powder coated | With lock |
| 5 | Rear door | 1 | Pcs | 0.8mm cold rolled steel | Powder coated | A type door |
| 6 | Lock | 4 | Pcs | - | - | - |
| 7 | Mounting rail | 4 | Pcs | 1.2mm cold rolled steel | Powder coated | - |
| 8 | Mounting angle | 6 | Pcs | 0.8mm cold rolled steel | Powder coated | - |
| 9 | Bottom plate | 1 | Pcs | 0.8mm cold rolled steel | Powder coated | - |
| 10 | Fixed shelf | 2 | Pcs | 1.2mm cold rolled steel | Powder coated | 1pcs under 37u |
| 11 | Castors | 4 | Pcs | - | - | - |
| 12 | Feet | 4 | Pcs | - | - | - |
| 13 | Cage and nuts | 40 | sets | - | - | 20pcs under 32u |
| 14 | Fan | 4 | Pcs | - | - | - |
| 15 | 6way power strip | 1 | Pcs | - | - | - |
| 16 | Wrench | 1 | Pcs | - | - | - |

## 19" Rack cabinet 42U x D800 mm


© 2021, Lanview®. All rights reserved.