Shelf 400 mm depth for 19" rack

Item no.: LVR241025



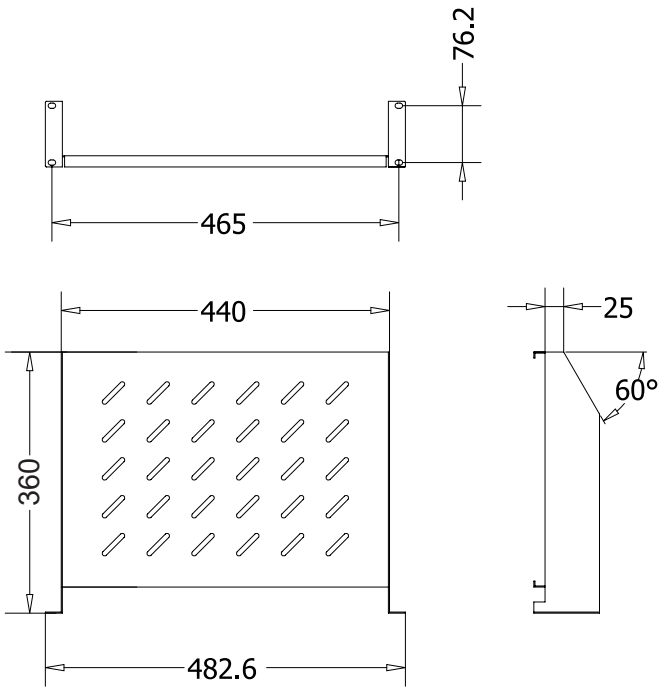

PRODUCT OVERVIEW

The fixed vented rack mountable cantilevered shelf offers a simple way to install non rack mountable equipment into a rack cabinet.

The ventilated shelf design improves air flow and helps lower temperatures in the rack.

SPECIFICATIONS

Type	Shelf
Modular spacing	19"
Rack capacity	2U
Mount	4 point front
Color	Black
Material	Steel
Material thickness	1.5 mm
Max weight	20 kg
Dimensions	440 x 360 mm



© 2021, Lanview®. All rights reserved.