LANVIEW PROFESSIONAL NETWORK SOLUTIONS

19" Rack cabinet 18U x D600 mm

Item no.: LVR243002



PRODUCT OVERVIEW

Floor-standing 600mm wide rack cabinet designed for the installation of both cabling and equipment. Suitable for multiple applications including data centers, server rooms, local area networking (LAN) cabling and hardware.

The side panels are removable and the cabinet is prepared for installation of fan tray, shelves and power giving you the option to create the cabinet that best suits your needs.

Access Panels at the top and bottom of the cabinet for easy cable access and added versatility.

Adjustable cage nut rails, levelers and castors are included. Please note that the castors are only for positioning the empty rack, they are not meant to support the rack when it's loaded with equipment.

SPECIFICATIONS

Type	Floor-standing rack cabinet
Modular spacing	19"
Rack capacity	18U
Color	Black
Material	Steel and Glass
Front door	Tempered Glass
Front door key lock	Yes
Removable front door	Yes
Removable side panels	Yes
Castors and feet	4 castors, 4 adjustable feet
Mounting profile	Front and rear
Rail thickness	1.2mm
Ventilation	Passive, space for fan tray

Industry standard compliance	Comply with ANSI/EIA RS-310-D, DIN41491; PART1, IEC297-2, DIN41494; PART7, GB/T3047.2-92 standard. Compatible with metric, ETSI and 19' international standard
Width	600 mm
Height	1000 mm
Depth	600 mm
Maximum weight capacity	300 kg
Package	Flatpack



© 2021, Lanview®. All rights reserved.

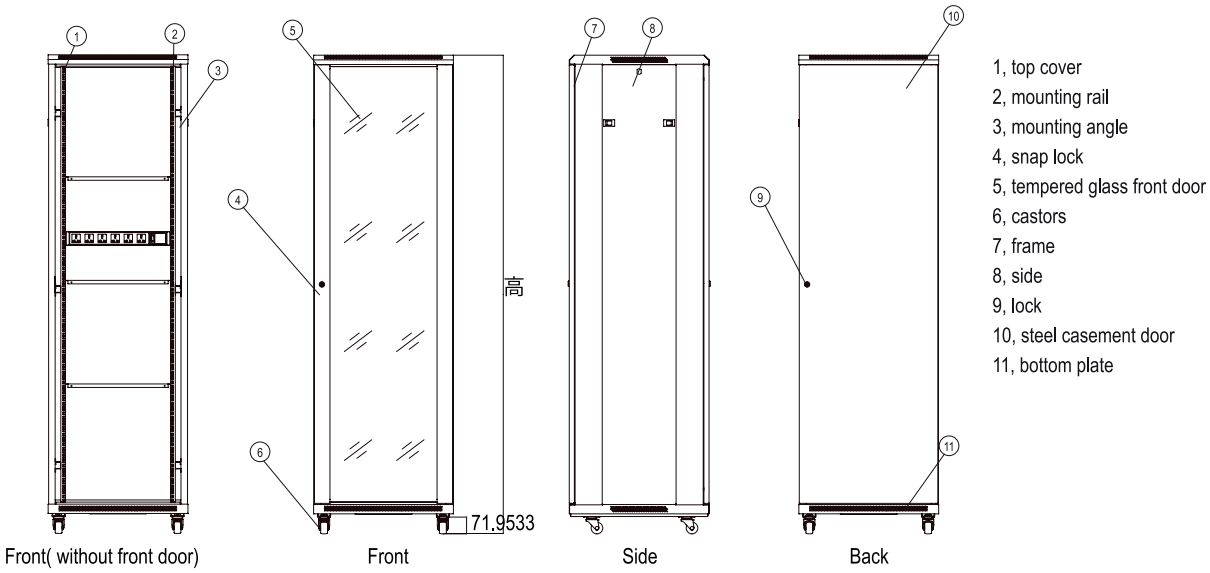

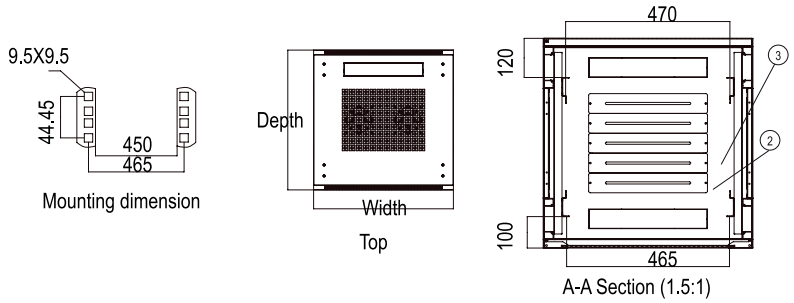

S/N	SPECIFICATION	QTY	UNIT	MATERIAL	SURFACE FINISH	REMARK
1	Top cover	1	Pcs	0.8mm cold rolled steel	Powder coated	-
2	Rack	2	Pcs	0.8mm cold rolled steel	Powder coated	-
3	Front door	1	Pcs	0.8mm cold rolled steel	Powder coated	B type door
4	Side panel	2	Pcs	0.8mm cold rolled steel	Powder coated	With lock
5	Rear door	1	Pcs	0.8mm cold rolled steel	Powder coated	A type door
6	Lock	4	Pcs	-	-	-
7	Mounting rail	4	Pcs	1.2mm cold rolled steel	Powder coated	-
8	Mounting angle	6	Pcs	0.8mm cold rolled steel	Powder coated	-
9	Bottom plate	1	Pcs	0.8mm cold rolled steel	Powder coated	-
10	Fixed shelf	2	Pcs	1.2mm cold rolled steel	Powder coated	1pcs under 37u
11	Castors	4	Pcs	-	-	-
12	Feet	4	Pcs	-	-	-
13	Cage and nuts	40	sets	-	-	20pcs under 32u
14	Fan	4	Pcs	-	-	-
15	6way power strip	1	Pcs	-	-	-
16	Wrench	1	Pcs	-	-	-

19" Rack cabinet 18U x D600 mm

© 2021, Lanview®. All rights reserved.