Drawer 2U for 19" rack

Item no.: LVR241093



PRODUCT OVERVIEW

The lockable rack mount drawer provide a secure enclosure to store any equipment you would need on-hand at your rack, such as networking tools, mice, software, manuals, and spare cables.

SPECIFICATIONS

Type	Drawer
Modular spacing	19"
Rack capacity	2U
Lock	Yes
Mount	4 point front
Color	Black
Material	Steel
Material thickness	1.5 mm
Max weight	10 kg
Slides	Steel with ball bearings
Dimensions	440 x 350 mm
Fit	D600 mm racks



© 2021, Lanview®. All rights reserved.

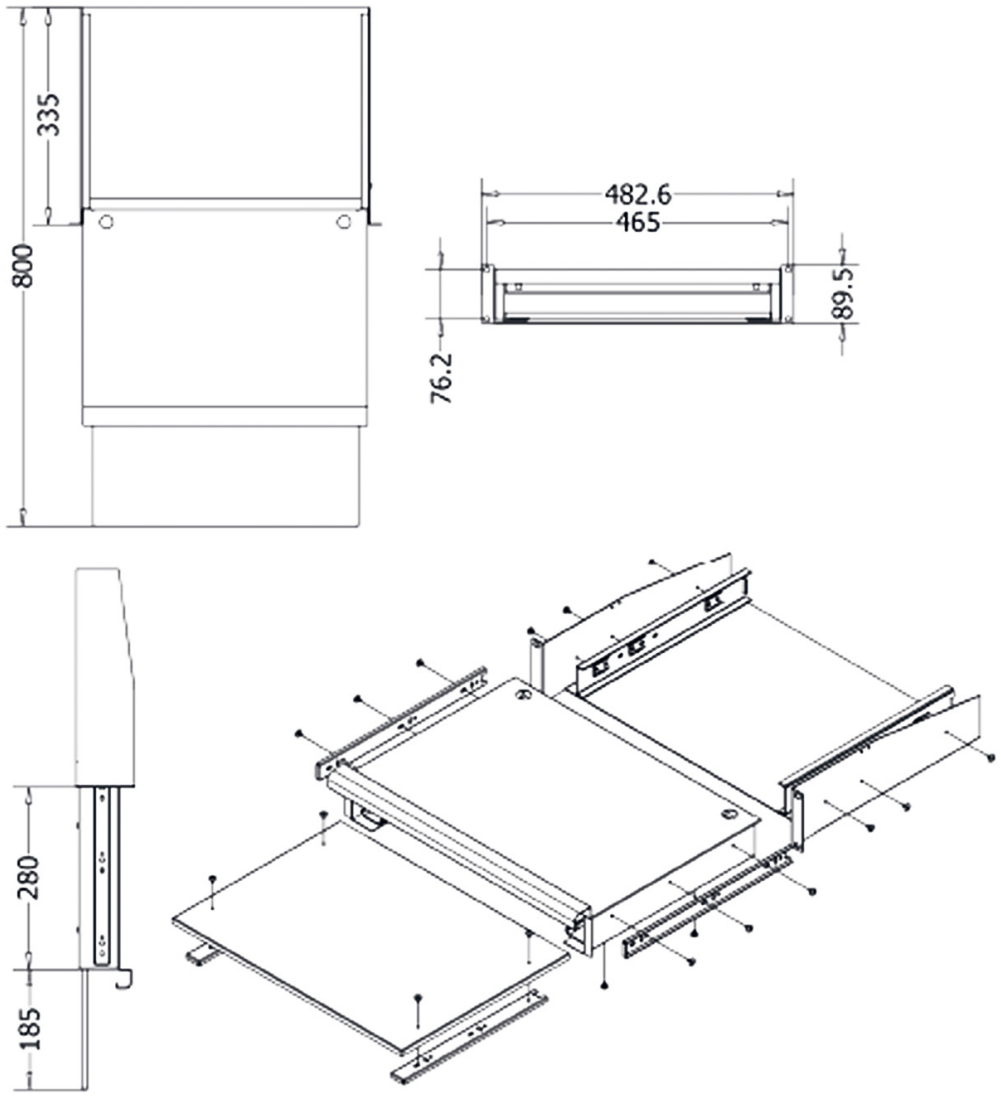

Drawer 2U for 19" rack

© 2021, Lanview®. All rights reserved.