19" Wall Mounting Cabinet 10U x D600 mm

Item no.: LVR242035



PRODUCT OVERVIEW

Wall-mounted 600mm wide rack cabinet designed for the installation of both cabling and equipment. Suitable for multiple applications including local area networking (LAN) cabling and hardware, and the housing of surveillance and audio visual equipment.

SPECIFICATIONS

Type	Wall mounted rack cabinet
Modular spacing	19"
Rack capacity	10U
Color	Black
Material	Steel and Glass
Front door	Tempered Glass
Front door key lock	Yes
Removable front door	Yes
Removable side panels	Yes
Mounting profile	Front and rear
Rail thickness	1.5 mm
Ventilation	Passive, space for 2 fans

Industry standard compliance	Comply with ANSI/EIA RS-310-D, DIN41491; PART1, IEC297-2, DIN41494; PART7, GB/T3047.2-92 standard. Compatible with metric, ETSI and 19' international standard
Width	600 mm
Height	553 mm
Depth	600 mm
Maximum weight capacity	60 kg
Package	Flatpack



© 2021, Lanview®. All rights reserved.

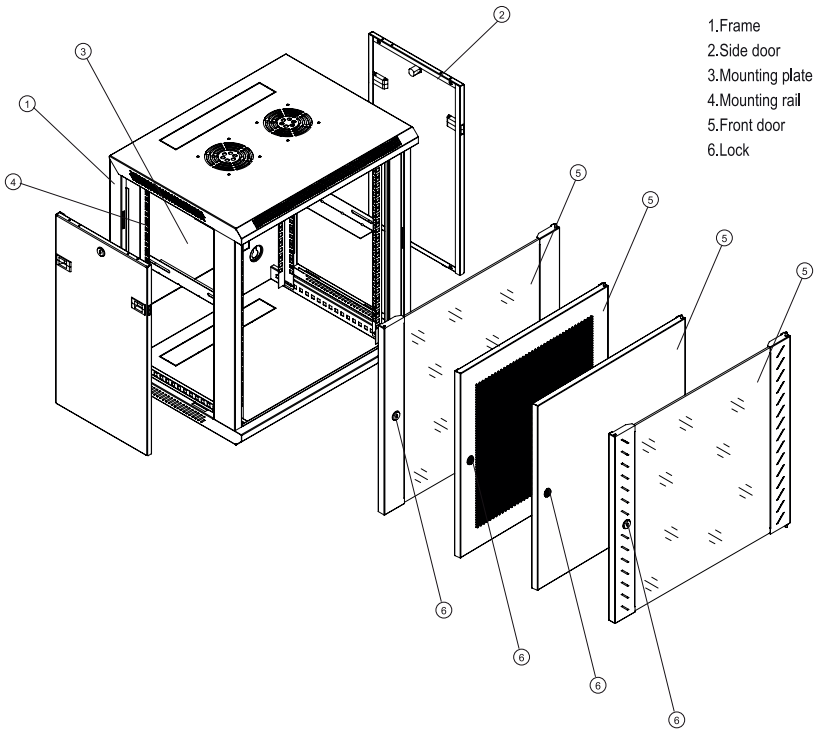

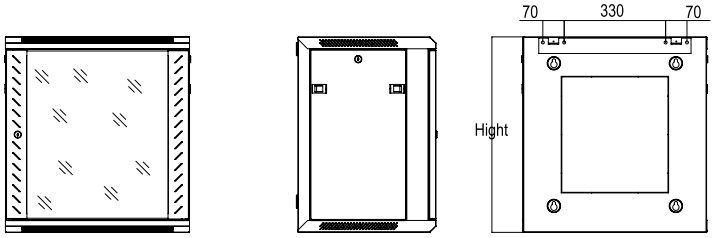

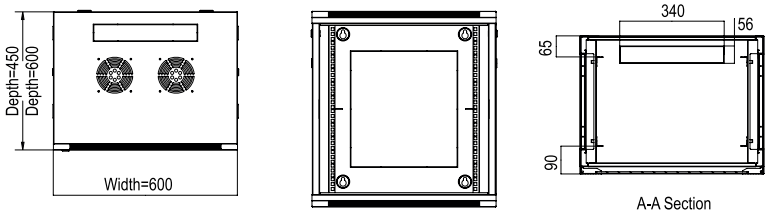

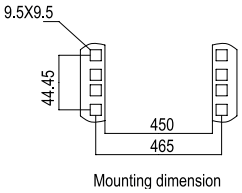

19" Wall Mounting Cabinet 10U x D600 mm

© 2021, Lanview®. All rights reserved.