Instructions
LVN128149, LVN128152, LVN128153

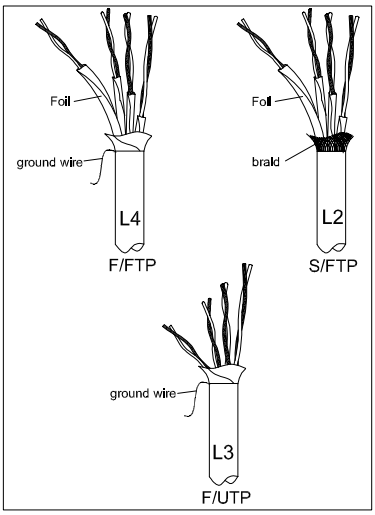

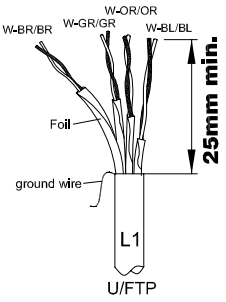

Step 1:
Strip the cable for minimum 25 mm,pull the foil or braided shield back over the jacket.

NOTES:
IDC is suitable for 22~24 AWG wires.

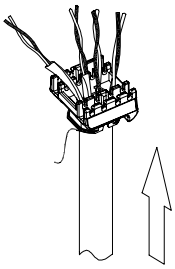

Step 2:
Insert the wires into the cap through the holes.

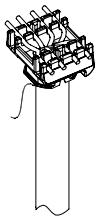

Step 3:
Lay the wires to their correct positions based on the color code (T568A/T568B)

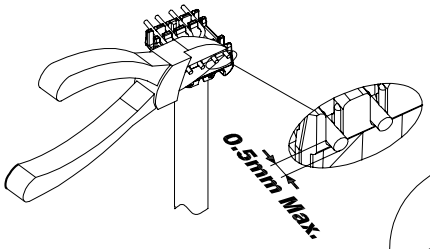

Step 4:
Cut the excess wires off. The tips of the wires should protrude no more than 0.5mm.

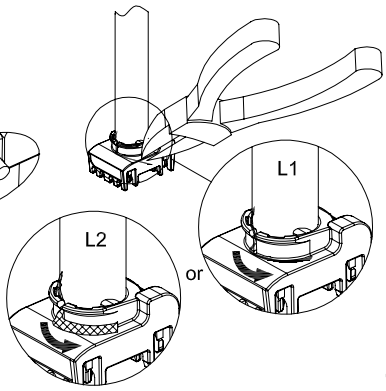

Step 5:
Wrap the grounding wire,braid around the cap as shown picture

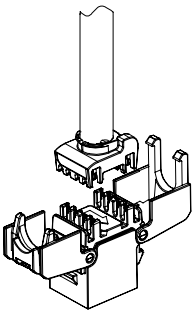

Step 6:
Put the cap on the IDC tower. The arrows on the jack and the cap should face the same direction. Put the cap into postion.

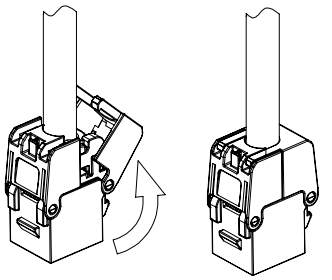

Step 7:
Close the jaws until hearing the click.

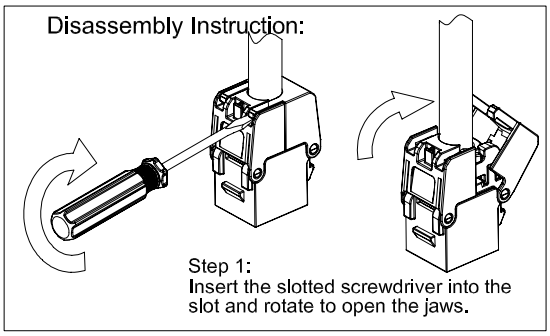

Step 1:
Insert the slotted screwdriver into the slot and rotate to open the jaws.

© 2021, Lanview®. All rights reserved.