MX440-A

MX440-A's design has continued COUGAR's iconic sturdy and solid style. With an included ARGB fan, the tempered glass left panel showcases stunning lighting view. Besides, it has wide and powerful interior spaces, which allows you to have hardware expandability, high cooling performance, and abundant storage space.

Distinguished and Unique Design
MX440-A's front panel features bold lines and rugged structures. It is the chassis that brings the new concept of strength and sturdy. The brushed metal-like texture with orange borders give it a unique look that makes you stand out among the others.

Attractive RGB Lighting with a Massive Tempered Glass Left Panel
MX440-A comes with an ARGB fan, which allows internal lighting to create mesmerizing effects from the tempered glass left panel. The full-length PSU cover also helps you to present a clean and tidy build.

Wider but More Compact and Powerful
MX440-A's 215mm width allows much larger interior space with better cooling performance and cable management. However, its compact exterior dimension takes up less desktop space. MX440-A can surely fit a full-sized ATX Motherboard, 320mm-length Graphic card, four 2.5" SSDs, and two 3.5" HDDs, which allow you to achieve the extreme operation and abundant storage space.

Easy Access and Connectivity for All Your Devices
With USB 3.1 Gen-2 Type-C and USB 3.0 ports, MX440-A connects to the latest devices. It also brings high-speed connections to fulfill massive data transfer needs for the ultimate PC enthusiast.

Strong Cooling Performance
MX440-A's interior space supports up to 170mm height CPU air cooler, a 360mm water cooling radiator, and high-end cooling components. It helps you to protect critical components from overheating.

Model Name	MX440-A
Model No.	CGR-56C3B-A
Case Form Factor	Mid Tower
Motherboard Type	Mini ITX / Micro ATX / ATX
Dimension	215 (W) x 505 (H) x 424 (D) mm / 8.5 (W) x 19.9 (H) x 16.7 (D) inch
I/O Panel	Type C 3.1 x 1, USB 3.0 x 2, Mic x 1 / Audio x 1, Reset Button
Case Drive Bays	3.5" : 2
	2.5" : 4 + 1 (converted from 3.5" drive bays) / (2 SSD trays included)
Expansion Slots	7
Cooling Fan Support	Front : 120mm x 3 / 140mm x 2
	Top : 120mm x 2
	Rear : 120mm x 1 / 140mm x 1 (120mm ARGB Fan x 1 pre-installed)
Maximum Number of Fans	6 Max.
Water Cooling Radiator Support	Front : 360mm / 280mm / 240mm / 140mm / 120mm
	Top : 240mm / 120mm
	Rear : 140mm / 120mm
Transparent Left Panel	4mm Tempered Glass
Max. Graphics Card Length	320mm / 12.6inch
Max. CPU Cooler Height	170mm / 6.7inch
Max. PSU Length	150mm / 5.9inch

Specifications might vary depending on the country or region of sale.

Assembly Drawing

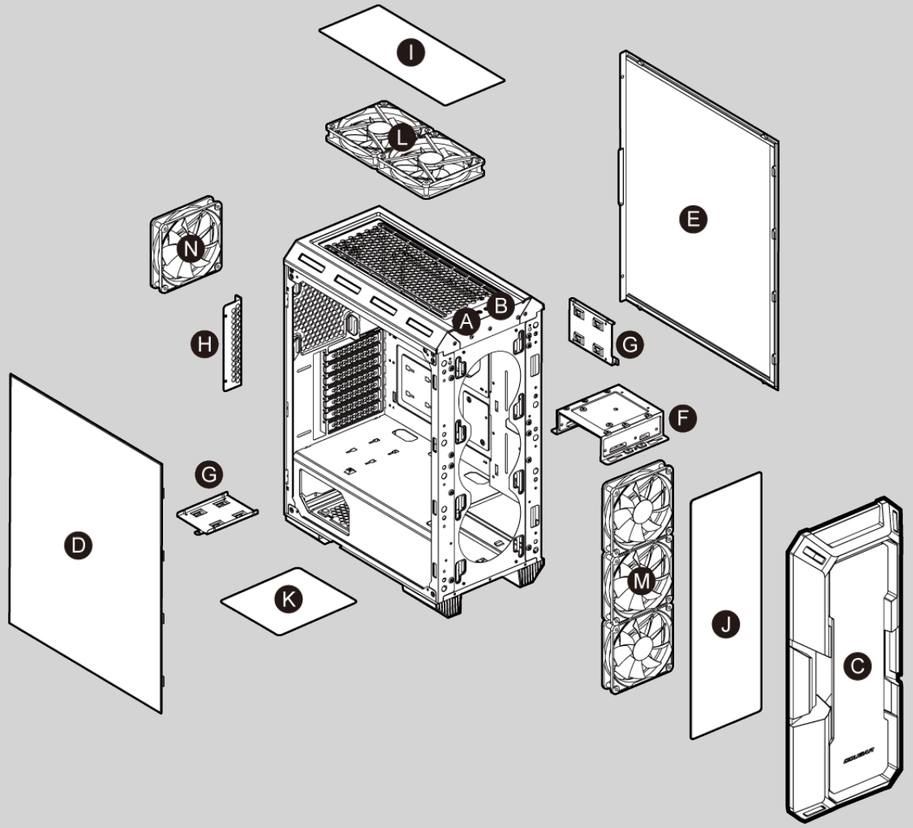

- A Power button / Reset button
- B TYPE C 3.1 / USB 3.0 / HD audio ports
- C Front panel
- D Tempered glass side panel
- E Right side panel
- F 3.5" HDD cage (compatible for 2.5" HDD/SSD)
- G 2.5" HDD/SSD trays
- H Slot covers
- I Air filter for top panel
- J Air filter for front panel
- K Air filter for bottom panel
- L 2 x 120mm fans for top panel (optional)
- M 3 x 120mm / 2 x 140mm fans for front panel (optional)
- N 120mm / 140mm fan for rear panel (1 x 120mm ARGB Fan pre-installed)

Installing the Front I/O Connectors

TYPE C 3.1	USB 3.0	HD AUDIO	POWER SW	RESET SW	POWER LED	H.D.D LED
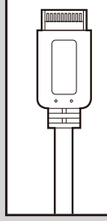	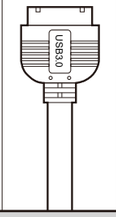		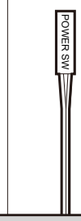		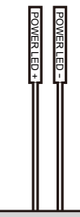	

FEATURES

ENGLISH
- Impressive brushed metal-like front Panel
- Massive tempered glass left panel
- Support for up to six fans and a 360mm radiator
- Support for up to 320mm long graphics cards
- Support for two 3.5" HDDs and four 2.5" SSDs

DEUTSCH
- Beeindruckende Frontplatte aus gebürstetem Metall
- Linker Abdeckung aus massivem gehärtetem Glas
- Unterstützt bis zu sechs Lüfter und einen 360-mm-Kühlkörper
- Unterstützt Grafikkarten mit einer Länge von bis zu 320 mm
- Unterstützt 2 3,5" Zoll-Festplatten und 4 2,5" Zoll-SSDs

РУССКИЙ
- Впечатляющая матовая металлическая передняя панель
- массивной левой панелью из закаленного стекла
- Поддержка до шести вентиляторов и 360-мм радиатора
- Поддержка видеокарт длиной до 320 мм
- Поддержка двух 3.5-дюймовых жестких дисков и четыре 2.5-дюймовых SSD

ESPAÑOL
- Impresionante panel frontal tipo metal cepillado
- Panel izquierdo de vidrio templado
- Soporta hasta 6 ventiladores y un radiador de 360mm
- Soporte para tarjetas gráficas de hasta 320mm de largo
- Soporte para 2 HDD de 3.5" y 4 SSD de 2.5"

FRANÇAIS
- Panneau avant en métal brossé impressionnant
- Un capot gauche en verre trempé massi
- Prend en charge jusqu'à 6 ventilateurs et un radiateur de 360 mm
- Prend en charge les cartes graphiques jusqu'à 320 mm de longueur
- Prise en charge de 2 disques durs 3,5" et 4 SSD 2,5"

PORTUGUÊS
- Painel frontal em metal escovado impressionante
- Painel lateral esquerdo em vidro temperado
- Suporta até 6 ventoinhas e radiador de 360mm
- Suporta placas gráficas de até 320mm
- Suporta até 2 HDDs de 3.5" e 4 SSDs de 2.5"

POLISH
- Imponujący panel przedni przypominający szczotkowany metal
- Lewej pokrywie z litego szkła hartowanego
- Obsługa maksymalnie 6 wentylatorów i radiatora do 360 mm
- Możliwość montażu kart graficznych o długości do 320 mm
- Obsługa 2 dysków twardych 3,5" i 4 SSD 2,5"

한국어
- 인상적인 브러시 드 메탈과 같은 전면 패널
- 강력한 강화 유리 좌측 덮개가 있는
- 최대 6 개의 팬 및 360mm 라디에이터 지원
- 최대 320mm의 긴 그래픽 카드를 지원
- 3.5" HDD 2개와 2.5" SSD 4개

日本語
- ヘアライン加工が印象的なフロントパネル
- 強化ガラスウィンドウでPCの内部が見えるので内部のパーツを引き立てます
- 6個のファンと360mmの水冷ラジエーターを装着でき、優れた放熱効果を確保します
- 最大320mmグラフィックカードに対応できます
- 2つの3.5"のHDDと4つの2.5" SSDを搭載可能です

中 文
- 高质感发丝纹仿金属面板
- 全透钢化玻璃左侧盖
- 最高可支援6个风扇与360mm的水冷散热器
- 支援长达320mm的显示卡
- 支援2个 3.5" HDD硬碟与4个 2.5" SSD硬碟

ACCESSORY KIT

	3.5" HDD screws	X 8
	Motherboard screws and 2.5" SSD screws	X 29
	Power supply screws	X 4
	Stand-off	X 3
	Fan screws	X 20
	2.5"HDD / SSD EVA washers	X 8
	Cable ties	X 5

GLOBAL WARRANTY POLICY
WARRANTY PERIODS OF COUGAR GAMING DEVICES
Product : COUGAR MX440-A
Warranty : 1 Year
- This warranty gives you specific legal rights. You may also have other rights granted under local law. These rights may vary.
- Only for electrical components.

ДАТА ИЗГОТОВЛЕНИЯ ПРОДУКЦИИ
год и месяц изготовления продукции указаны в серийном номере продукта.
(существует 2 способа определения даты изготовления, оба способа описаны ниже)

Ⓐ После S/N: первые две цифры означают год, вторые две – месяц изготовления.
Например, S/N: H**1702**000001 означает, что товар был произведен в феврале 2017 года.

Ⓑ После S/N: если указаны буквы, то две буквы представляют цифры из таблицы ниже,и означают год, последующие две цифры – месяц изготовления.
Например, S/N: D**AG02**REVI000001 означает, что товар был произведен в феврале 2017 года.

A	B	C	D	E	F	G	H	I	J
1	2	3	4	5	6	7	8	9	0

- Например, AG = 17 = 2017 год

تعليمات التركيب و الأمان:
- عند التركيب أو التفكيك يجب التأكد من أن جميع الأسلاك مفصولة عن الكهرباء.
- يجب اتخاذ الإحترازات اللازمة لمنع الصعق الكهربائي.
- يجب إرتداء الملابس المناسبة أثناء تركيب/ تجميع الكمبيوتر.
- يجب تركيب كل قطعة بحذر و بمكانها المناسب.
- من يقوم بعلمية التركيب الشخص المختص فقط.

БЪЛГАРИЯ
- Подробни инструкции за употреба изтеглете от: https://cougargaming.com/bg

България QR код

Removing side panels

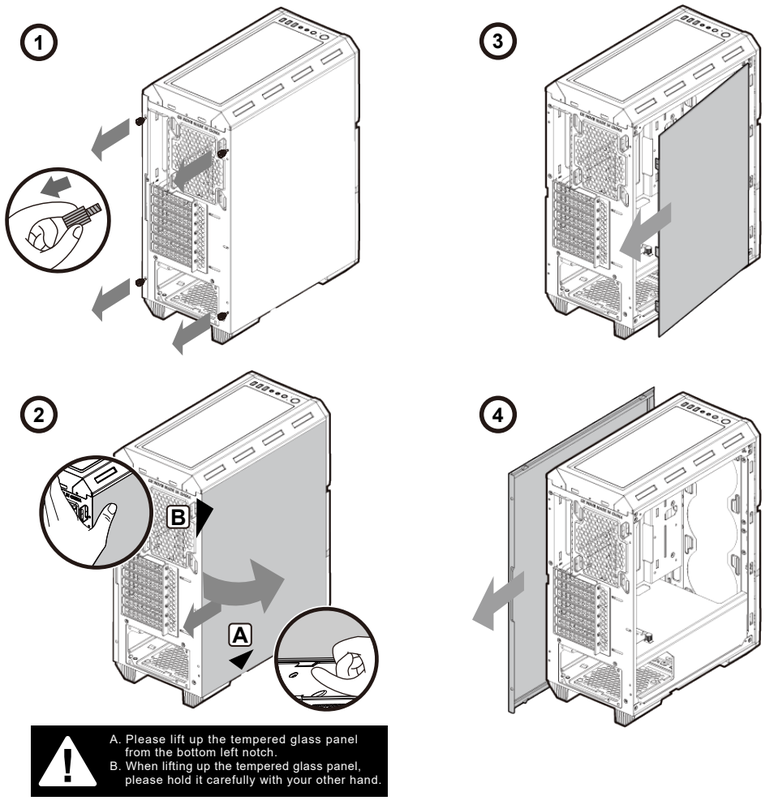

A. Please lift up the tempered glass panel from the bottom left notch.
B. When lifting up the tempered glass panel, please hold it carefully with your other hand.

Installing the 2.5" SSDs

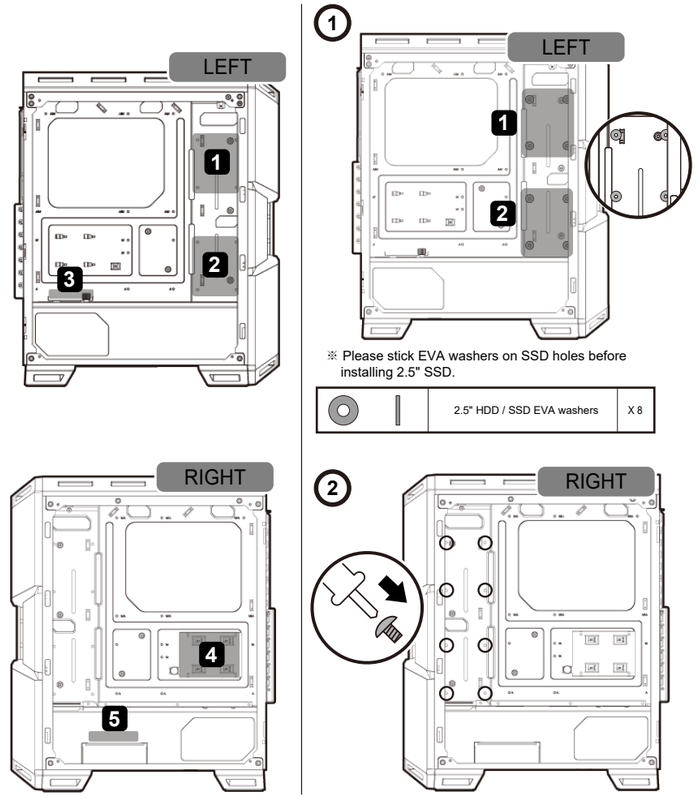

※ Please stick EVA washers on SSD holes before installing 2.5" SSD.

	2.5" HDD / SSD EVA washers	X 8

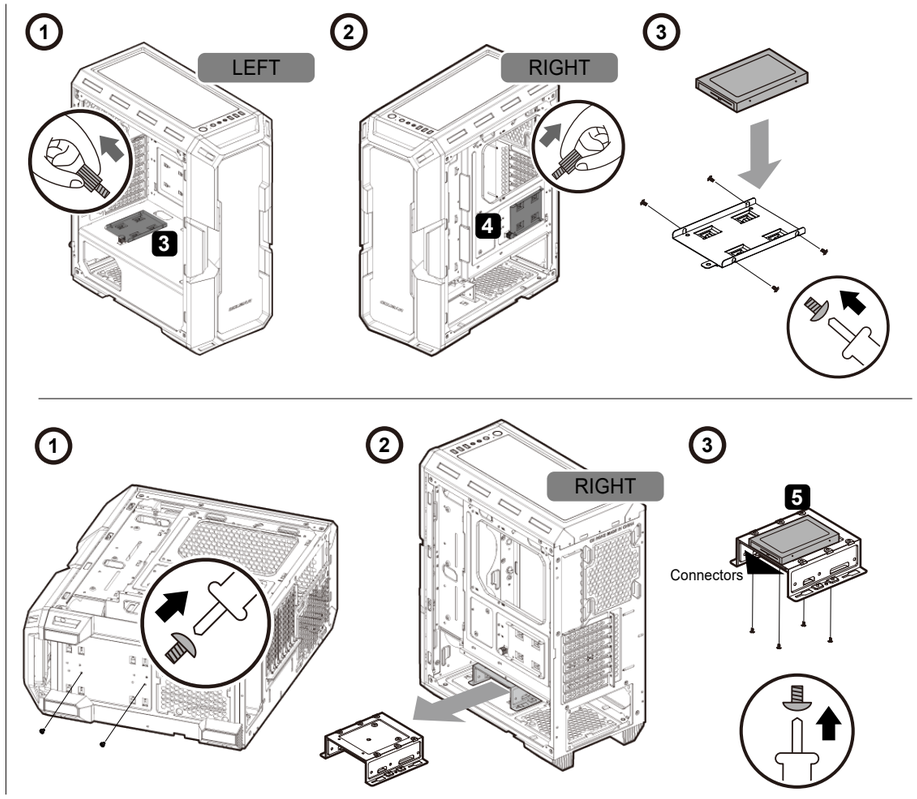

Installing the 3.5" HDDs

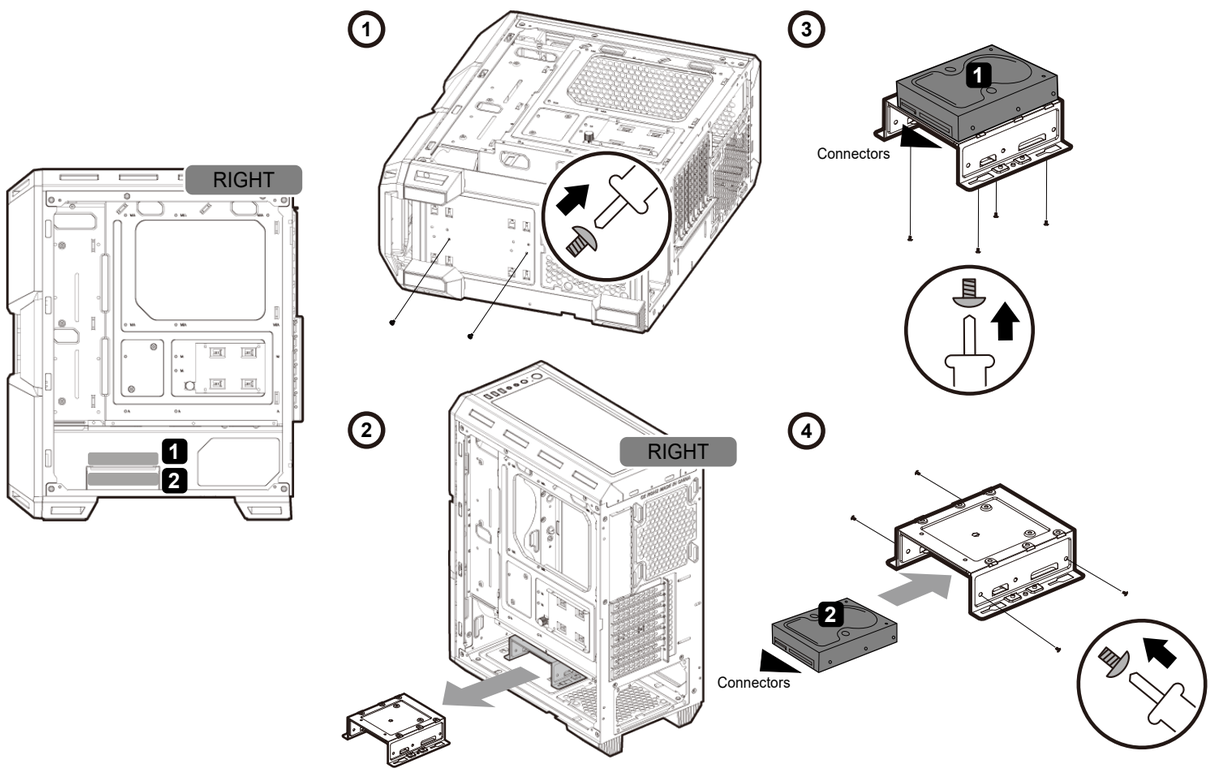

Installing water cooling radiators & cooling fans

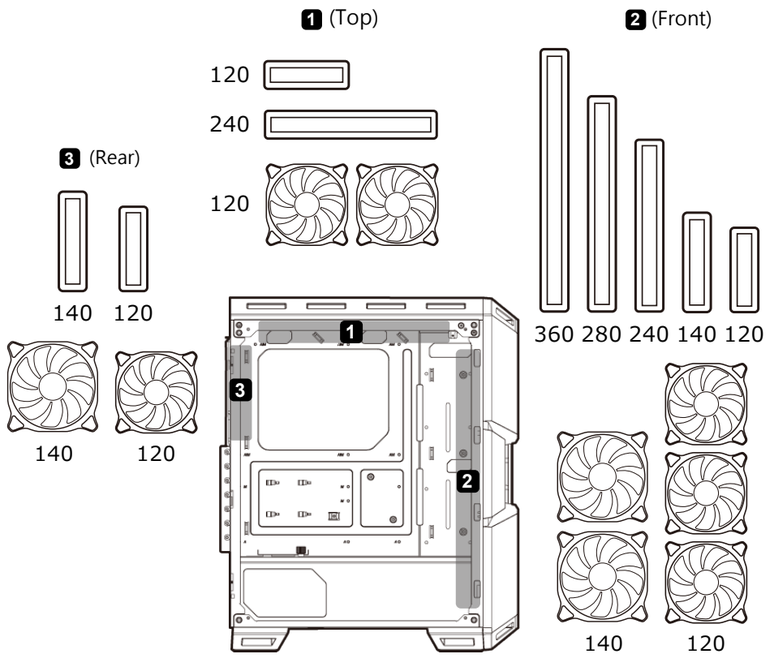

Installing PCI-E cards

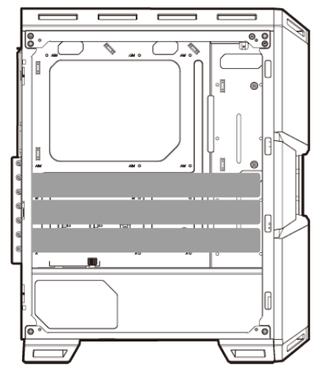

■ Support for graphics card up to 320mm-long

COUGAR USA Technical Service
Tel: (833) 256-3778
Mail: rma@compucaseusa.com
https://cougargaming.com/support/contact/upload/

Compucase Enterprise Co.,Ltd.
No. 225, Lane 54, An Ho Road Sec. 2 Tainan, Taiwan, R.O.C
Tel:+886-6-356-0606
Service E-Mail:service@cougargaming.com

For more information, please visit
www.cougargaming.com

Compucase Enterprise Co.,Ltd.
All rights reserved.

Made in China