User Guide

Quality, Design and Innovation



home.liebherr.com/fridge-manuals

LIEBHERR

Contents

1 The appliance at a glance 2
1.1 Delivered contents 2
1.2 Overview of the appliance and its equipment 3
1.3 Range of appliance use 3
1.4 Conformity 3
1.5 EPREL Database 3

2 General safety instructions 3

3 Start-up 5
3.1 Turning on the appliance 5
3.2 Insert the equipment 5

4 Food management 5
4.1 Storing food 5
4.2 Storage times 6

5 Energy saving 6

6 Use 6
6.1 Controls and displays 6
6.1.1 Status display 6
6.1.2 Navigation 6
6.1.3 Display symbols 7
6.2 Operating logic 7
6.2.1 Activating/deactivating settings 7
6.2.2 Selecting the function value 7
6.2.3 Activating/deactivating settings 7
6.2.4 Selecting the setting value 8
6.2.5 Calling up the customer menu 8
6.3 Functions 8
6.3.1 Setting the temperature 8
SuperCool 8
SuperFrost 8
PowerCool 9
PartyMode 9
HolidayMode 9
EnergySaver 9
IceMaker* 9
MaxIce* 9
6.4 Settings 9
Language 9
Setting up the WLAN connection 10
Entry lock 10
Display brightness 10
Door alarm 10
Info 10
SabbathMode 11
CleaningMode 11
TubeClean* 11
Ice cubes* 11
D-Value 11
Reminder 11
Turn off appliance 12
6.5 Warnings 12
6.5.1 Message 12
6.5.2 DemoMode 12

7 Equipment 12
7.1 Door racks 12
7.2 Shelves 13
7.3 Split shelf 14
7.4 VarioSafe 14
7.5 Space for baking tray 14
7.6 Drawers 15
7.7 EasyFresh-Safe 15
7.8 Humidity control 15
7.9 IceMaker* 16
7.10 VarioSpace 16
7.11 Accessories 16

8 Maintenance 17
8.1 FreshAir carbon filter 17
8.2 defrost the appliance 18
8.3 Cleaning the appliance 18

9 Customer support 19
9.1 Technical specifications 19
9.2 Operating noises 19
9.3 Technical faults 20
9.4 Customer service 21
9.5 Rating plate 21

10 Decommissioning 21

11 Disposing of the appliance 22

The manufacturer is constantly working to improve all models. Therefore please understand that we reserve the right to make design, equipment and technical modifications.

To get to know all the benefits of your new appliance, please read the information contained in these instructions carefully.

The instructions apply to several models, so there may be differences. Sections which only apply to certain appliances are indicated with an asterisk (*).

Instructions for action are marked with a ▶, the results of action are marked with a ▷.

This User Guide applies to:

- ICNd(i) 5153
- ICNd(i) 5173
- SICNd 5153

1 The appliance at a glance

1.1 Delivered contents

Check all parts for damage during transport. If you have any complaints, please contact the dealer or Customer Service (see 9.4 Customer service) .

Delivery contains the following parts:

- Integrated appliance
- Equipment (depending on your model)
- Installation parts (depending on your model)
- “Quick Start Guide”
- “Installation Guide”
- Service brochure

1.2 Overview of the appliance and its equipment

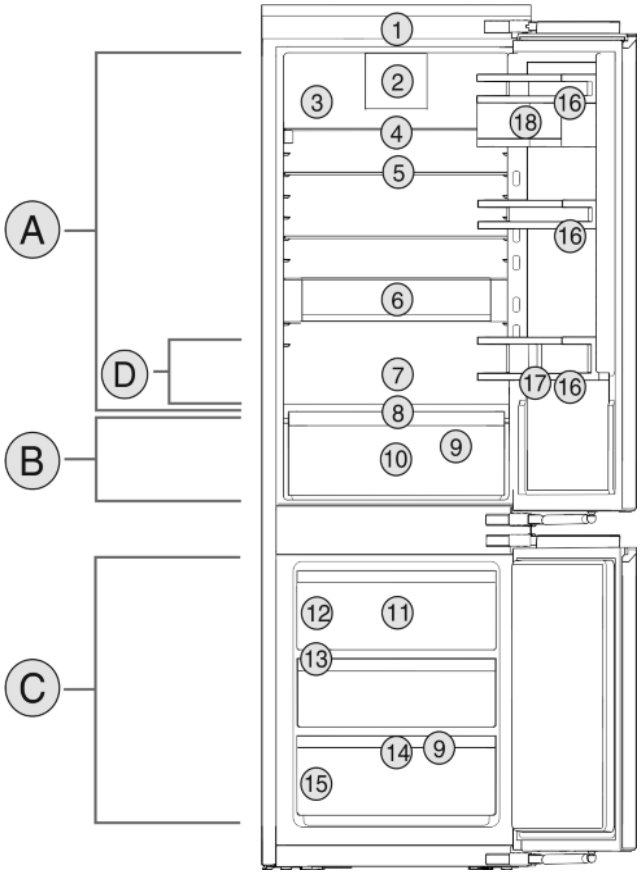

Fig. 1 Exemplary illustration

Temperature zone

(A) Fridge
(B) EasyFresh
(C) Freezer
(D) Coldest zone

Equipment

(1) Controls
(2) Fan with FreshAir active carbon filter
(3) Stainless steel rear wall
(4) Split shelf
(5) Shelf
(6) VarioSafe
(7) Space for baking tray
(8) EasyFresh-Safe
(9) Drainage outlet
(10) EasyFresh-Safe
(11) Freezer compartment
(12) IceMaker*
(13) VarioSpace
(14) Freezer tray*
(15) Rating plate
(16) Door racks
(17) Bottle rack
(18) VarioBoxes

Note

▶ The default arrangement of the shelves, drawers, and baskets is best for energy efficiency.

1.3 Range of appliance use

Normal use

The appliance is only suitable for cooling food for residential or other similar environments. This includes the following types of uses

- in staff kitchens, bed and breakfasts,
- by guests in country homes, hotels, motels and other types of accommodations,
- for catering and similar wholesale services.

All other types of uses are not permitted.

Foreseeable misuse

The following uses are specifically prohibited:

- Storage and cooling of medication, blood plasma, laboratory preparations or similar substances and products in accordance with the Medical Device Directive 2007/47/EC
- Use in areas at risk of explosion

Incorrect appliance use can cause damage to the stored products or cause them to spoil.

Climate ratings

The appliance is set to operate within specific ambient temperature limits according to its climate rating The climate rating for your appliance is printed on the rating plate

Note

▶ To guarantee trouble-free operation, comply with the indicated ambient temperatures.

Climate rating	for ambient temperatures from
SN	10 °C to 32 °C
N	16 °C to 32 °C
ST	16 °C to 38 °C
T	16 °C to 43 °C

1.4 Conformity

The refrigerant circuit has been tested for leaks. When installed, the appliance complies with the relevant safety regulations as well as the Directives 2014/35/EU, 2014/30/EU, 2009/125/EC, 2011/65/EU and 2010/30/EU.

1.5 EPREL Database

Details about energy labeling and ecodesign requirements will be available on the European product database (EPREL) from March 1, 2021. You can access the product database at the following link: https://eprel.ec.europa. eu/ You will be asked to enter the model ID. You can find the model ID on the nameplate.

2 General safety instructions

Dangers for the user:

- This appliance can be operated by children as well as by persons with reduced physical, sensory or mental capabilities or lack of experience and knowledge if they are supervised or have been instructed in the safe use of the appliance and understand the associated risks. Children must not play with the appliance. Cleaning and user maintenance must not be performed by children unless they are supervised. Children between the ages of 3 and 8 may load and unload the appliance. Children under the age of 3 must be kept away from the appliance if they are not constantly supervised.

- When disconnecting the appliance from the outlet, always take hold of the plug. Do not pull on the cable.
- Disconnect the power plug or switch off the power if a fault occurs.
- Do not damage the mains power line. Do not operate the appliance from a defective mains power line.
- Repairs and operations on the appliance may only be carried out by the customer service department or other specifically trained specialist engineers.
- Only install, connect and dispose of the appliance in accordance with the instructions.
- Only operate the appliance after it has been installed.
- Please keep the instructions and pass them on to any future owner.
- The manufacturer is not liable for damage arising from incorrect connection to the water supply.

Risk of fire:

- The refrigerant contained within the appliance (specifications on the rating plate) is environmentally friendly, but flammable. Leaking refrigerant can ignite.
  - Do not damage the pipes of the refrigerant circuit.
  - Do not handle ignition sources inside the appliance.
  - Do not use electrical devices inside the appliance (e.g. steam cleaners, heaters, ice cream makers, etc.).
  - If refrigerant leaks: Remove naked flames or ignition sources located near the area of the leak. Air the room well. Contact the customer service department.
- Do not store explosive materials or spray cans with flammable propellants, such as e.g. butane, propane, pentane, etc. in the appliance. You can recognize such spray cans by the printed contents or a flame symbol. Any leaking gasses can be ignited by electrical components.
- Alcoholic beverages or other containers holding alcohol must always be tightly sealed for storage purposes. Any leaking alcohol can be ignited by electrical components

Tipover hazard:

- Do not stand or climb on the base, drawers, doors, etc. This applies in particular to children.
- Danger of tipping when the door is open if the appliance is not properly installed.

Risk of food poisoning:

- Do not consume food that has passed its best before date.

Danger of frostbite, feelings of numbness and pain:

- Avoid continued skin contact with cold surfaces or chilled/frozen food or adopt protective measures.

Risk of injury and damage:

- Hot steam may lead to injuries. Do not use any electrical heating or steam cleaning equipment, naked flames or defrosting sprays for defrosting
- Do not remove ice with sharp objects

Risk of crushing:

- Do not hold onto the hinge when opening and closing the door. Fingers may get caught.

Risk of damage to the slate front:

- Do not stick any stickers on the front.

Symbols on the device:



The symbol can be on the compressor. It refers to the oil in the compressor and refers to the following danger: Can be lethal if swallowed or inhaled. This notice only applies for recycling. There is no danger during normal operation.



The symbol is located on the compressor and indicates the danger of inflammable materials. Do not remove the label.



This label or a similar one can be located on the rear of the appliance. It refers to the foamed-in panels in the door and/or the housing. This notice only applies for recycling. Do not remove the label.

Follow the specific instructions in the other sections:

	DANGER	indicates a hazardous situation, which if not avoided, will result in death or serious injury.
	WARNING	indicates a hazardous situation, which if not avoided, could result in death or serious injury.
	CAUTION	indicates a hazardous situation, which if not avoided, will result in minor or moderate injury.
	NOTICE	indicates a hazardous situation, which if not avoided, could result in damage to property.
	Note	indicates useful advice and tips

*** Depending on model and options**

3 Start-up

3.1 Turning on the appliance

Make sure that the following requirements are met:

- ❑ Appliance is installed and connected according to installation instructions.
- ❑ All adhesive strips, adhesive and protective films, as well as transport safety devices in and on the appliance are removed.
- ❑ All advertising leaflets are removed from the drawers.

▶ Turning on the appliance

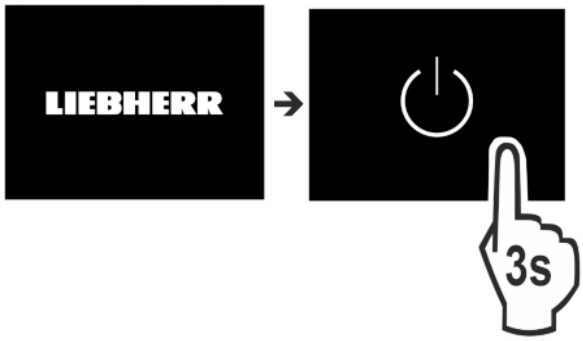

Fig. 2

▶ After turning on the appliance, select the language.

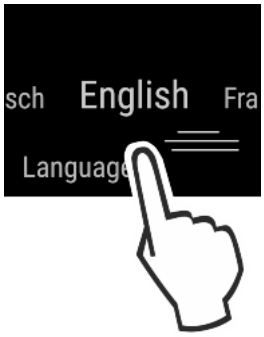

Fig. 3

▶ The status screen appears.
▶ If DemoMode appears along with the blue screen after the appliance is switched on, you can disable DemoMode within the next 5 minutes.

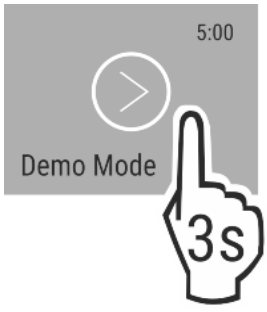

Fig. 4

▶ Press DemoMode for 3 seconds.
▷ DemoMode is off.

Note
The manufacturer recommends:
▶ Storing food: wait around 2 hours for the appliance to reach the set temperatures.
▶ Store frozen produce at -18 °C or lower.

3.2 Insert the equipment

▶ Insert the supplied equipment to help you make the most of the appliance.
▶ Purchase the SmartDevice Box and insert it (see https://smartdevice.liebherr.com/install).*
▶ Install the SmartDevice app (see https://apps.home.liebherr.com/).

Note
You can purchase accessories from the Liebherr household appliance store (home.liebherr.com).

4 Food management

4.1 Storing food

WARNING
Danger of fire
▶ Do not use electrical appliances inside the food storage compartments of the appliance, unless they are of the type recommended by the manufacturer.

When storing food, remember these basic rules:

- ❑ Do not obstruct the air vents on the back wall.
- ❑ Do not obstruct the air vents on the fan.
- ❑ Food is well sealed.
- ❑ Food that easily absorbs or emits odor or taste, are in sealed containers or are covered.
- ❑ Raw meat or fish is in clean, sealed containers so that other food cannot be touched or drip on them.
- ❑ Liquids are in sealed containers.
- ❑ Food is stored spaced apart to ensure good air circulation.

Note
Failure to follow these guidelines can lead to food perishing.

4.1.1 Fridge

The natural air circulation means the temperature varies in different sections.

Arranging the food:
▶ In the top section and in the door: butter and cheese, preserves, and tubes.
▶ The coldest zone *Fig. 1 (D)* is for: easily perishable food such as prepared meals, meat and sausages
▶ On the bottom shelf: raw meat and fish

4.1.2 EasyFresh-Safe

This compartment is for unsealed food, including fruit and vegetables.

The humidity depends on the moisture content of the stored items and how frequently the door is opened. You can regulate the moisture.

Arranging the food:
▶ Place unsealed fruit and vegetables.
▶ Excessive moisture: Regulate the air humidity (see 7.8 Humidity control) .

4.1.3 Freezer

This provides a dry, frosty storage climate at -18 °C. A frosty climate is suitable for storing frozen food and goods for several months, preparing ice cubes, or freezing fresh food.

Freezing food

You can freeze as many kilograms of fresh food within 24 hours as indicated on the nameplate (see 9.5 Rating plate) under "freezing capacity ... kg/24h".

To ensure that the food freezes quickly to the core, keep to the following quantities per pack:

- Fruit, vegetables up to 1 kg
- Meat up to 2.5 kg

Before freezing, please note the following:

❑ SuperFrost is activated (see 6.3 Functions) when the amount of food to freeze exceeds approx. 2 kg.
❑ With a small volume of frozen goods: SuperFrost is activated approx. 6 hours prior.
❑ With the maximum volume of frozen goods: SuperFrost is activated approx. 24 hours prior.

Arranging the food:

CAUTION
There is a risk of injury from pieces of broken glass!
Bottles and cans containing drinks can split or crack when frozen. This applies in particular to carbonated drinks.
▶ Do not freeze bottles and cans containing drinks

With a small volume of frozen goods:
▶ Place sealed food in the top drawers.
With the maximum volume of frozen goods:
▶ Remove the top drawers and place sealed food on the top shelves.
With the maximum capacity of frozen goods:
▶ Once SuperFrost activates automatically, place food into the drawer.

Defrosting food

- in the fridge compartment
- in the microwave
- in the oven/fan oven
- at room temperature

WARNING
Danger of food poisoning!
▶ Do not re-freeze defrosted food.

▶ Remove only the food you need for now.
▶ Use defrosted food as quickly as possible

Freezer tray*

Use the freezer tray for berries, herbs, vegetables and other small goods without them freezing together in the process. The food keeps its shape and is easier to separate into portions later on.

You can also store the freezer packs in the freezer tray to save space.
▶ Spread food, unsealed, at a good distance apart, over the whole surface of the freezer tray.

4.2 Storage times

The storage times given are guidelines

Food with a “use by” date must still be consumed by the date indicated on the package

4.2.1 Fridge

The best-before date stated on the packaging applies.

4.2.2 Freezer

Guidelines for storage periods for various foods		
Ice cream	at -18 °C	2 to 6 months
Sausage, ham	at -18 °C	2 to 3 months
Bread, bakery products	at -18 °C	2 to 6 months
Game, pork	at -18 °C	6 to 9 months
Fish, fatty	at -18 °C	2 to 6 months
Fish, lean	at -18 °C	6 to 8 months
Cheese	at -18 °C	2 to 6 months
Poultry, beef	at -18 °C	6 to 12 months
Vegetables, fruit	at -18 °C	6 to 12 months

5 Energy saving

- Always ensure good ventilation. Do not obstruct ventilation openings or grilles.
- Never block air slits in the fan.
- Do not install the appliance in direct sunlight or next to a stove, heater or similar heat source.
- Energy consumption depends on installation conditions such as the ambient temperature (see 1.3 Range of appliance use) . A warmer ambient temperature can increase the energy consumption.
- Avoid opening the appliance door for any longer then necessary
- The lower the temperature is set the higher the energy consumption.
- Sort your food items: home.liebherr.com/food.
- All food stored in the appliance should be well wrapped and covered. This prevents frost buildup.
- Only take food out for as long as necessary so that it does not get too warm.
- Insertion of warm foods: first let the food cool down to room temperature.
- Defrost frozen food in the fridge
- For longer periods of absence, use HolidayMode .

6 Use

6.1 Controls and displays

The display provides a quick overview of the temperature setting and the status of functions and settings. You can control the functions and settings either by deactivating/activating them or by selecting a value.

6.1.1 Status display

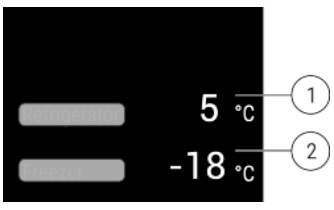

Fig. 5

(1) Fridge compartment temperature display
(2) Freezer compartment temperature display

The Status display shows the set temperatures and is the home display. From there, you can navigate to the options and settings.

6.1.2 Navigation

Navigate in the menu to see the individual functions. An audible signal sounds after confirming a function or setting. If no selection is made after 10 s, the display switches to the Status screen.

*** Depending on model and options**

The appliance is operated by swiping and confirming in the display:



Fig. 6

Back:

- Confirm your selection in the submenu. The display returns to the menu.
- Select . The display returns to the function/setting.

Back to Status display:

- Close and open the door.
- Wait 10 s. The display switches to the Status display.

6.1.3 Display symbols

The display symbols provide information about the current appliance status.

Symbol	Appliance status
	**Standby** The appliance or temperature zone is turned off.
	**Flashing number** Appliance is working. Temperature flashes until the set temperature is reached.
	
	**Flashing symbol** Appliance is working. Setting is made.

6.2 Operating logic

6.2.1 Activating/deactivating settings

You can activate/deactivate the following functions:

Symbol	Function
	SuperCool[x]
	PowerCool[x]
	SuperFrost[x]
	IceMaker and MaxIce[x]*

Symbol	Function
	PartyMode[x]
	HolidayMode
	EnergySaver

[x] When a function is on, the appliance works harder. This means the appliance could make louder noises and consume more energy.

▶ Swipe left in the display until the function appears.
▶ Confirm selected function with a short tap.
▷ You hear the confirmation tone.
▷ Status appears in the menu.
▷ Function is on/off.

6.2.2 Selecting the function value

With the following functions you can set a value in the submenu:

Symbol	Function
	**Cool:** Setting the temperature Turn on/off the temperature zone
	**Freeze:** Setting the temperature Turn on/off the temperature zone

▶ Swipe left in the display until the function appears.
▶ Confirm selected function with a short tap.
▶ Swipe on the display to select the setting value.

Setting the temperature

▶ Confirm selected value with a short tap.
▷ You hear the confirmation tone.
▷ The display changes to blue when active.
▷ Display switches back to the menu.

Switching the temperature zone on/off

▶ Press Confirm for 3 seconds.
▷ You hear the confirmation tone.
▷ Display returns to the status screen.

6.2.3 Activating/deactivating settings

You can activate/deactivate the following settings:

Symbol	Setting
	WiFi[1]
	Entry lock[2]
	SabbathMode[2]
	Cleaning Mode[2]
	Reminders[1]

Symbol	Setting
	Reset[2]
	Switch off [2]

▶ Swipe left in the display until Settings appears.
▶ Confirm settings by tapping.
▶ Swipe until you can see the setting you want.

[1] **Activate setting (short press)**
▶ Confirm with a short tap
▷ You hear the confirmation tone.
▷ Status appears in the menu.
▷ Setting is on/off.

[2] **Activate setting (long press)**
▶ Press selection for 3 seconds to confirm.
▷ You hear the confirmation tone.
▷ Status appears in the menu.
▷ Display changes.

6.2.4 Selecting the setting value

With the following settings you can set a value in the submenu:

Symbol	Settings
	Brightness
	Door alarm
	Language

▶ Swipe left in the display until Settings appears.
▶ Confirm settings by tapping.
▶ Swipe until you can see the setting you want.
▶ Confirm with a short tap
▶ Swipe in the display to select the setting value you want.
▶ Confirm with a short tap
▷ You hear the confirmation tone.
▷ Status appears briefly in the submenu.
▷ Display switches back to the menu.

6.2.5 Calling up the customer menu

The customer menu provides the following settings:

Symbol	Function
	D-Value [1]
 *	TubeClean*[2*]
 *	Ice cubes[1*]

▶ Swipe left in the display until Settings appears.
▶ Confirm settings by tapping.
▶ Swipe until About Appliance appears.
▶ Confirm with a short tap
▶ Call up the customer menu: Enter the code 151.
▶ Swipe in the customer menu until you can see the setting you want.

[1] **Select the setting value**
▶ Confirm with a short tap
▷ You hear the confirmation tone.
▷ Status appears briefly in the display.
▷ Display switches back to the menu.

[2] **Activate setting**
▶ To confirm, press the display for 3 seconds.
▷ You hear the confirmation tone.
▷ Status appears in the display.
▷ Symbol flashes while the appliance is working.

6.3 Functions

6.3.1 Setting the temperature

The temperature depends on the following factors:
- the number of times the door is opened
- The duration the door is opened
- the room temperature of the installation location
- the type, temperature and amount of food

Temperature zone	Recommended setting
 Fridge	5 °C
 Freezer	-18 °C

Setting the temperature
▶ Set the level (see 6.2 Operating logic) .
▷ The set temperature is shown on the bottom right of the display.
▷ Current temperature flashes in the display.

Switching off the temperature zone

The fridge section can be switched off separately.

When the freezer is switched off, all temperature zones are switched off.
▶ Switching off the IceMaker *
▶ Set the level (see 6.2 Operating logic) .
▷  appears.

SuperCool

Select this function for the maximum cooling setting, to reach lower cooling temperatures.

This function is relevant to the fridge section *Fig. 1 (A)*

Use:
- Cool large amounts of food quickly.

Activating/deactivating settings
▶ Using the fridge section: activate the function when you add the goods.
▶ Activating/deactivating (see 6.2 Operating logic) .
-or-
▶ Activating/deactivating in the Liebherr SmartDevice-App.*

The function automatically turns off. The appliance goes back to normal mode. The temperature adjusts itself to the set level.

SuperFrost

Select this function for the maximum freezing setting, to reach lower freezing temperatures.

This function is relevant to the freezer section *Fig. 1 (C)*.

Use:
- To freeze more than 2 kg fresh food a day.
- Freezing fresh food quickly to the core.
- Increasing the cold reserves in the stored goods before defrosting the appliance.

Activating/deactivating settings

With a small volume of frozen goods:
▶ Activate 6 hours before use.
With the maximum volume of frozen goods:
▶ Activate 24 hours before use.
▶ Activating/deactivating (see 6.2 Operating logic) .
-or-
▶ Activate/deactivate in the Liebherr SmartDevice-App.*

The function automatically turns off. The appliance goes back to normal mode. The temperature adjusts itself to the set level.



PowerCool

This function provides the perfect blanket temperature to cool your food.

This function is relevant to the fridge section *Fig. 1 (A)*.

Use:
- For higher room temperatures (from approx. 35 °C)
- At high air moisture e.g. on summer days
- When storing moist goods, to avoid condensation building up inside

Activating/deactivating settings

▶ Activating/deactivating (see 6.2 Operating logic) .

Note
The fan can still run without the setting being on. This is necessary and completely normal.

▷ Function activated: Energy consumption of the appliance is slightly increased.



PartyMode

This option offers an assortment of special functions and settings that are useful if you are having a party.

The following functions are activated:
- *SuperCool*
- *IceMaker* and *MaxIce*
- *InfinitySpring*

You can set any functions you like. Your changes are lost when the option is switched off.

Activating/deactivating settings

▶ Activating/deactivating (see 6.2 Operating logic) .
▷ On: All functions are activated at the same time.
▷ Off: Preset temperatures are restored.

The function is automatically switched off after 24 hours.



HolidayMode

This function minimizes the energy consumption during an extended absence. The temperature is increased to 15 °C.

The set freezer temperature remains unchanged.

This function is relevant to the fridge section *Fig. 1 (A)*.

Use:
- Save energy if you plan to be away for a while.
- Avoid coming home to bad smells and mold.

Activating/deactivating settings

▶ Empty everything from the fridge section.
▶ Activating/deactivating (see 6.2 Operating logic) .
▷ On: Fridge temperature is raised.
▷ Off: preset temperature is restored.



EnergySaver

This function is designed to reduce energy consumption. Higher temperatures are preset for all temperature zones, which means the appliance has to cool less frequently.

Temperature of the fridge section: 7 °C

Temperature of the freezer section: -16 °C

Use:
- Save energy.

Activating/deactivating settings

▶ Activating/deactivating (see 6.2 Operating logic) .
▷ On: Higher temperatures are preset for all temperature areas.
▷ Off: Preset temperatures are restored.



IceMaker*

Use IceMaker to generate ice cubes automatically. You can set the quantity and size

Use:
- Customize your ice cubes.

Activating/deactivating settings

▶ Activating/deactivating (see 6.2 Operating logic) .
-or-
▶ Activating/deactivating in the Liebherr SmartDevice-App.*



MaxIce*

MaxIce produces approx. 1.5 kg of ice cubes very quickly.

Use:
- When activating the IceMaker, you can choose between normal mode and MaxIce.

Activating/deactivating settings

▶ Activating/deactivating (see 6.2 Operating logic) .
-or-
▶ Activating/deactivating in the Liebherr SmartDevice-App.*

6.4 Settings



Language

This setting lets you choose the language of the display.

Choose from the following languages:
- German
- English
- French
- Spanish
- Italian
- Dutch
- Czech
- Polish
- Portuguese

- Russian
- Ukrainian
- Chinese

Activating/deactivating settings

▶ Activating/deactivating (see 6.2 Operating logic) .

Setting up the WLAN connection

This setting connects the appliance to the internet. The connection is managed in the SmartDevice Box. You can use the SmartDevice-App to add your appliance to a SmartHome-System. Use the SmartDevice-App or other compatible partner networks to enjoy advanced options and settings.

Note

The SmartDevice Box is available from the Liebherr home appliance store (home.liebherr.com).

More information about availability, requirements, and the individual options can be found online at smartdevice.liebherr.com.

Use:

- Manage the appliance with the SmartDevice-App or a compatible partner network.
- Enjoy advanced functions and settings.
- Check the appliance status on the SmartDevice-App.

❑ Purchase the SmartDevice Box and insert it (see https://smartdevice.liebherr.com/install).*

❑ Install the SmartDevice app (see https://apps.home.liebherr.com/).

Setting up the WLAN connection

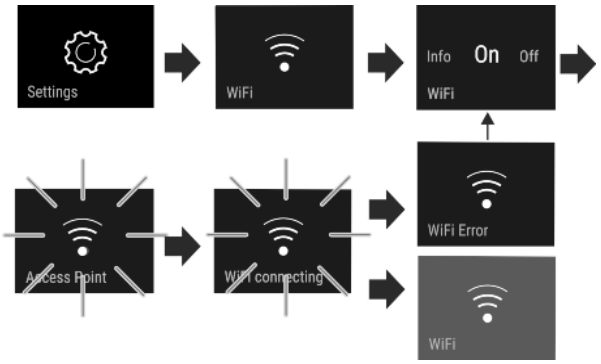

Fig. 7

▶ Activate (see 6.2 Operating logic) .

▷ The connection is set up: Connecting appears. The symbol flashes.

▷ The connection failed: WiFi Error appears.

Disconnecting

▶ Deactivate the setting (see 6.2 Operating logic) .

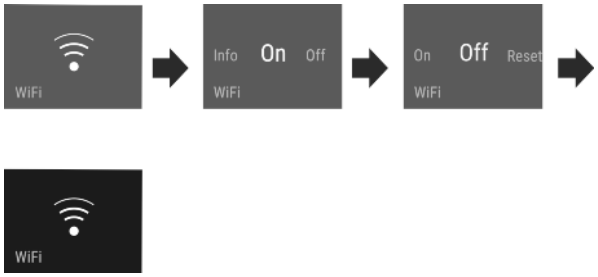

Fig. 8

▷ There is no connection: The symbol is displayed constantly.

Restoring the connection

▶ Restore settings (see 6.2 Operating logic) .

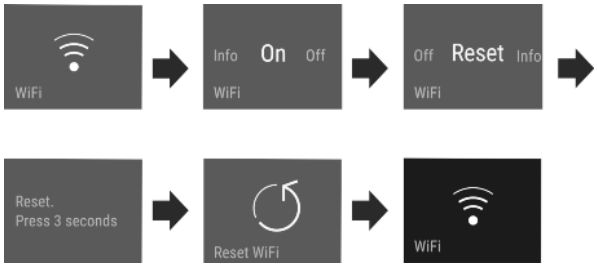

Fig. 9

▷ Connection and other settings are restored to factory settings.

Entry lock

This setting avoids accidental operation of the appliance, e.g. by children.

Use:

- Avoid unintentional changing of settings and functions.
- Avoid unintentional switching off of the appliance.
- Avoid unintentional temperature adjustments.

Activating/deactivating settings

▶ Activating/deactivating (see 6.2 Operating logic) .

Display brightness

With this setting, you can choose a brightness level for the display.

You can set the following brightness levels:

- 40%
- 60%
- 80%
- 100%

Choosing the setting

▶ Set the level (see 6.2 Operating logic) .

Door alarm

Set the time before the door alarm (see Close door) sounds.

Options are as follows:

- 1 min
- 2 min
- 3 min
- Off

Choosing the setting

▶ Set the level (see 6.5 Warnings) .

Info

This setting gives you appliance data and access to the customer menu.

It provides the following information:

- Model name
- Index
- Serial number
- Service number

*** Depending on model and options**

View appliance data

▶ Swipe in the display until Settings appears.
▶ Confirm the display.
▶ Swipe in the display until About appears.
▶ Read the appliance data.

SabbathMode

This setting meets the religious requirements on the Sabbath and Jewish festivals. Turn on SabbathMode to switch off certain controls. This means you can use the appliance without anyone changing any settings.

You can find a list of Star-K-certified appliances at www.star-k.org/appliances.

WARNING
Danger of food poisoning!
If there is a power outage when SabbathMode is on, this message is not saved. When the power is restored, the appliance continues in SabbathMode. Afterwards, the temperature display does not show a message about the power outage.
If there was a power outage during SabbathMode:
▶ Check the quality of the food. Do not consume spoiled food!

What happens on the appliance when in SabbathMode:

- The Status display permanently shows SabbathMode.
- The display is locked for all functions apart from turning off SabbathMode.
- Any functions/settings that are already on, remain active.
- The display stays bright when the door is closed.
- Reminders are disabled. The set timer is also stopped. This function is disabled in SabbathMode.
- Reminders and warnings are not shown. There are no acoustic signals and the display does not show warnings or settings like temperature or door warnings.
- IceMaker is out of use.*
- InfinitySpring is out of use.*
- The internal light is off.
- The defrost cycle only works for the specified time without taking account of fridge use.
- After a power cut the appliance automatically returns to SabbathMode.

Turning SabbathMode on/off

▶ To activate this function, swipe the display until you get to Settings and press for 1 second. The menu shows the available settings.
▶ Swipe the display until you see the SabbathMode (Menora) symbol. Press the symbol for 3 seconds.
▷ The display changes color. SabbathMode is on.

To disable the function, press the display for 3 seconds. SabbathMode is off.

CleaningMode

This setting makes it easy to clean the appliance.

This setting is relevant to the fridge section *Fig. 1 (A)*.

Use:

- Clean the fridge section manually.

What happens with the appliance when this setting is on:

- The display shows CleaningMode permanently.
- The refrigerator compartment is switched off.
- The internal light is on.
- Reminders and warnings are not shown. There is no acoustic signal.
- InfinitySpring is out of use.*

Activating/deactivating settings

▶ Activate/deactivate setting (see 6.2 Operating logic) .
▷ On: Fridge compartment is switched off. Light stays on.
▷ Off: preset temperature is restored.

This setting automatically switches off after 60 min. The appliance goes back to normal mode.

TubeClean*

This setting cleans the IceMaker pipes.

Make sure that the following requirements are met:

❑ IceMaker cleaning process is ready (see 8.3.4 Cleaning the IceMaker*) .

Activate setting

▶ Activate the setting in the customer menu (see 6.2 Operating logic) .
▷ Rinse process is ready (max. 60 min.): Symbol flashes.
▷ Water pipes are rinsed: Symbol flashes.
▷ Rinsing process is complete: Function turns off automatically.

Ice cubes*

With this setting, you can choose the ice cube size.

Choosing the setting

▶ Make your settings in the Customer menu (see 6.2 Operating logic) .

D-Value

The stainless steel rear wall is inside the appliance on delivery. The *D-Value* is therefore set to**D1**. You can remove the stainless steel back wall for cleaning.

The appliance is designed for use with and without the stainless steel rear panel, so the appliance can be operated without it. If the appliance is use without the stainless steel rear panel, the *D-Value* must be set to **D2**.

Note
Liebherr recommends the following:
▶ Use the appliance with the stainless steel back wall to avoid visible condensate and the goods from freezing.

Choosing the setting

▶ Make your settings in the Customer menu (see 6.2 Operating logic) .

Reminder

Reminders are displayed acoustically by a beep and visually by a symbol in the display. The signal gets louder until the alert stops.

Replace the FreshAir active carbon filter

This message appears when the air filter needs replacing.
▶ Replace the air filter every six months.
▶ Confirm the message with OK.
▷ The service interval resets.
▷ The air filter guarantees the air quality in the fridge.

Insert IceMaker drawer*

This message appears when the IceMaker drawer is open.
▶ Push in IceMaker drawer.
▷ The message disappears.
▷ The IceMaker makes ice cubes.

Activate setting

▶ Activating/deactivating (see 6.2 Operating logic) .

Turn off appliance

This setting turns off the whole appliance.

Switch off whole appliance

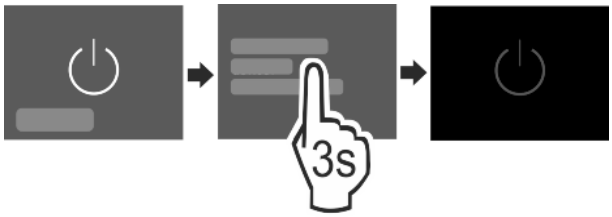

Fig. 10
▶ Turning off the IceMaker .*
▶ Activating/deactivating (see 6.2 Operating logic) .
▷ Off: Display turns black.

6.5 Warnings

Warnings are issued with an acoustic signal and visually with a symbol on the display. The signal gets louder until the alert stops.

6.5.1 Message

Close door

This message appears if the door is open too long.

You can set the time before this message appears .
▶ Stop alarm: Confirm the message.
-or-
▶ Close the door.

Power failure.

This message appears if the freezer temperature rises after a power outage. When the power outage is over, the appliance will continue to operate at the last temperature setting.
▶ Stop alarm: Confirm the message.
▷ Temperature alarm appears (see Temperature alarm) .

Temperature alarm

This message appears if the freezer temperature does not match the set temperature.

Temperature differences may be caused by:
- Hot fresh food was placed in the appliance.
- When sorting and removing food from the appliance, too much warm ambient air got in.
- There has been a prolonged power outage.
- The appliance is faulty.

When the cause is eliminated, the appliance will continue to operate at the last temperature setting.
▶ Confirm the display.
▷ Warmest temperature is displayed.
▶ Confirm the display again.
▷ Status display appears.
▷ Current temperature is displayed.

Error

This message appears when there is a fault with the appliance. An appliance component has an error.
▶ Open the door.
▶ Take note of the error code.
▶ Confirm the message.
▷ The acoustic warning ceases
▷ The display changes to the Status screen.
▶ Close the door.
▶ Contact Customer Service (see 9.4 Customer service) .

6.5.2 DemoMode

If “D” appears in the display, demo mode is on. This feature is designed for retailers. The cooling features are disabled.

Switching off DemoMode

When you see a time counting down:
▶ Confirm within the countdown.
▷ DemoMode is off.
If there is no countdown:
▶ Disconnect the power plug.
▶ Reconnect the power plug.
▷ DemoMode is off.

7 Equipment

7.1 Door racks

7.1.1 Moving/removing door racks

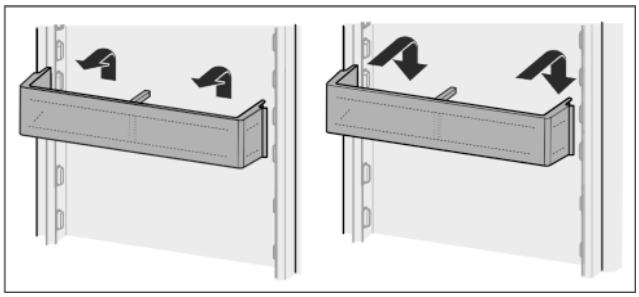

Fig. 11
▶ Remove racks as per the illustration

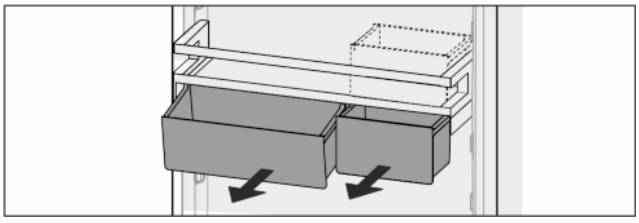

Fig. 12

You can use just one or both VarioBoxes. To store oversized bottles, suspend just one box over the bottle rack.

Move the VarioBox shelf:

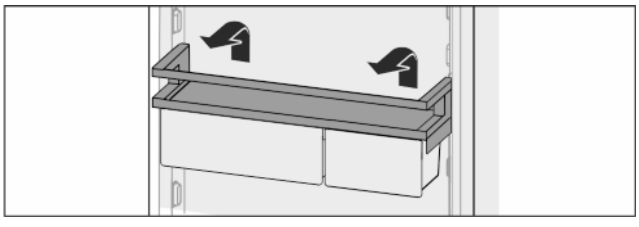

Fig. 13

* Depending on model and options

▶ Pull up and out.
▶ Replace at any position.

Moving the VarioBoxes:

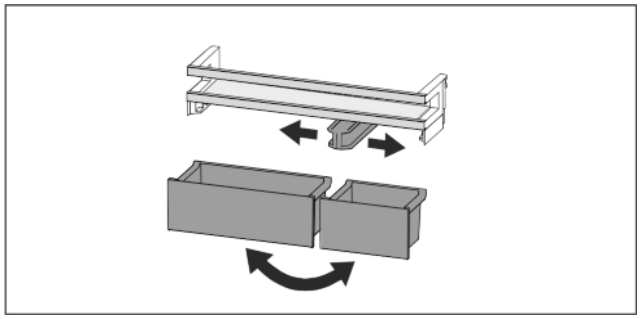

Fig. 14

If the door rack is removed:
▶ Remove boxes.
▶ Move the middle holding part to where you want it.
▶ Replacing boxes.

7.1.2 To dismantle door racks

The door racks can be disassembled for cleaning.

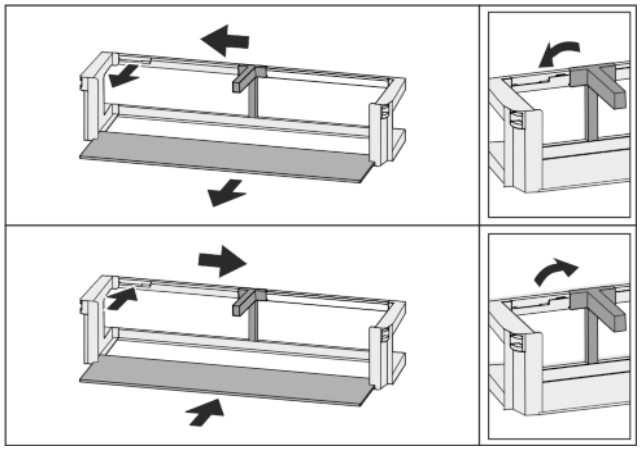

Fig. 15

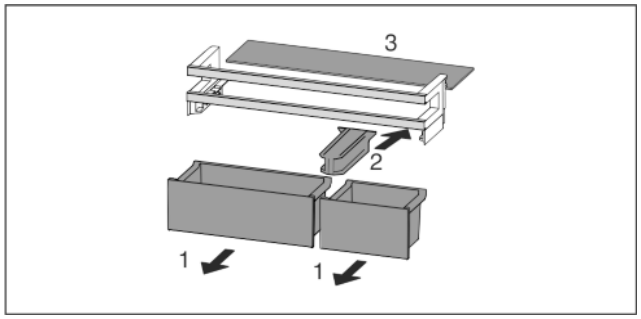

Fig. 16

▶ Disassemble the door racks.

7.2 Shelves

7.2.1 Moving/removing shelves

Extension stops secure the shelves against being accidentally pulled out

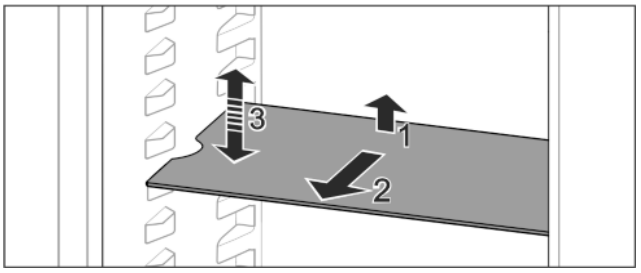

Fig. 17

▶ Lift the shelf and pull to the front.
▷ Side recess to shelf position.
▶ To move a shelf: set to the position you want and slide into place.

-or-

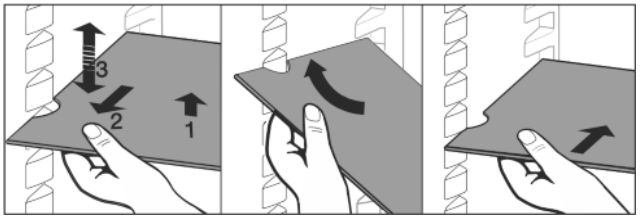

Fig. 18

▶ To completely remove a shelf: pull out to the front.

▶ Easier removal: Set the shelf at an angle.
▶ Reinserting the shelf: slide in until it engages.
▷ Pull-out stoppers are pointing down.
▷ Pull-out stoppers are behind the front shelf.

You can also remove the shelf above the EasyFresh compartments.

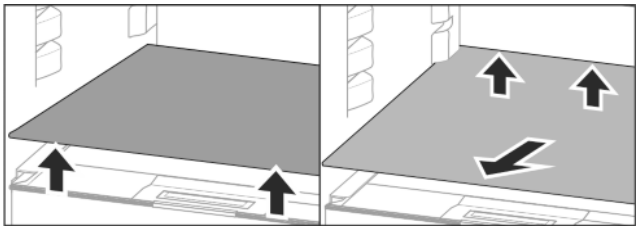

Fig. 19

To remove shelf
▶ Remove from the front.

Do not place any goods on the drawer cover below!

Slide the shelf in:
▶ Place the shelf at an angle, with the back tilted downwards.
▷ Pull-out stoppers are pointing down.
▶ Slide the shelf into place.

7.2.2 Dismantling shelves

The shelves can be dismantled for cleaning.

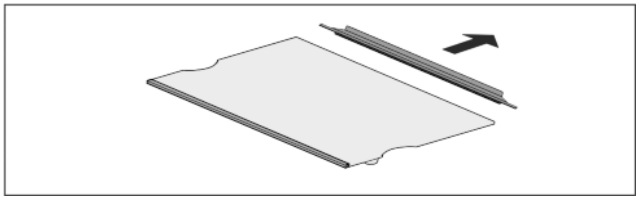

Fig. 20

▶ Disassemble the shelf.

7.3 Split shelf

7.3.1 Using the split shelf

Extension stops secure the shelves against being accidentally pulled out

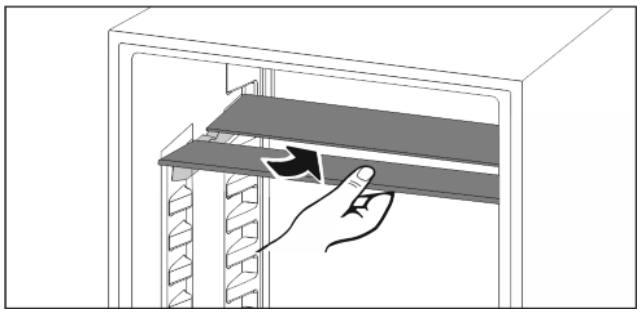

Fig. 21

▶ Push the split shelf underneath as in the illustration

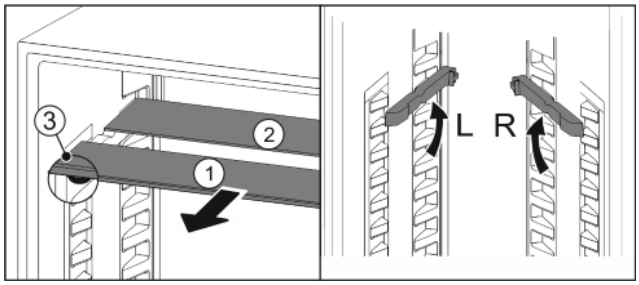

Fig. 22

Adjusting heights:

▶ Pull the glass panels out *Fig. 22 (1)* from the front, one at a time.
▶ Pull the support rails out of their retainers and snap into place at the height you want them.
▶ Slide in the glass panels one at a time.
▷ Flat pull-out stoppers at the front, right behind the support rail.
▷ Taller pull-out stoppers at the back.

Using both shelves:

▶ Lift the top glass plate and pull the bottom glass plate forwards.
▷ Glass panel *Fig. 22 (1)* with pull-out stoppers is at the front.
▷ Stoppers are pointing down *Fig. 22 (3)*.

7.4 VarioSafe

The VarioSafe provides space for small food, packs, tubes, and jars.

7.4.1 Using the VarioSafe

You can remove the drawer and slide it back in at two different heights. This is to accommodate taller small items in the drawer.

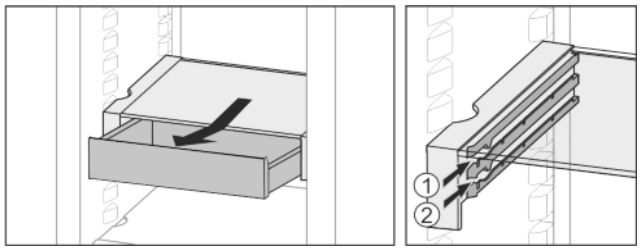

Fig. 23

▶ Remove the drawer.
▶ Slide in at any height *Fig. 23 (1)* or *Fig. 23 (2)*.

7.4.2 Moving the VarioSafe

You can shift the height of the entire VarioSafe unit.

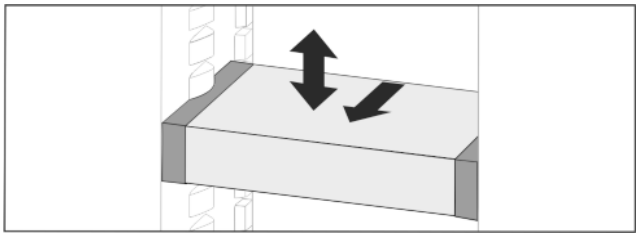

Fig. 24

▶ Pull to the front.
▷ Side recess to shelf position.
▶ Raise or lower to any height.
▶ Slide to the rear.

7.4.3 Removing the VarioSafe completely

You can remove the entire VarioSafe unit.

▶ Pull to the front.
▷ Side recess to shelf position.

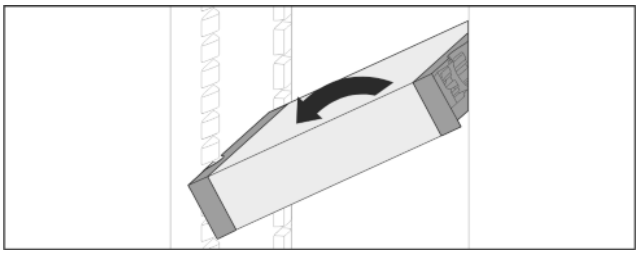

Fig. 25

▶ Tilt and pull to the front.

7.4.4 Disassembling the VarioSafe

The VarioSafe can be dismantled for cleaning.

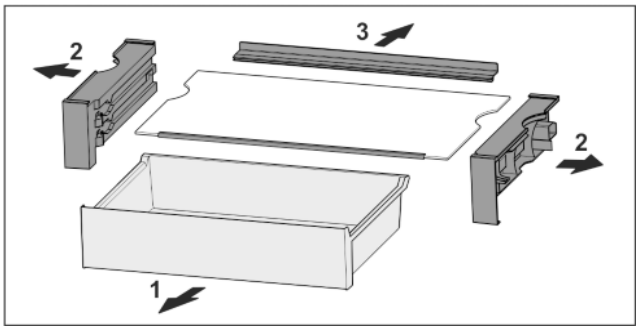

Fig. 26

▶ Dismantling the VarioSafe.

7.5 Space for baking tray

There is space for a baking tray *Fig. 1 (7)* above the drawers.

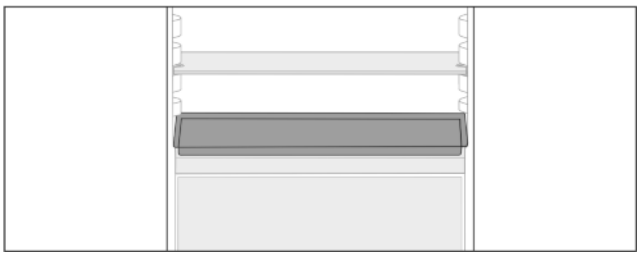

Fig. 27

Make sure that the following requirements are fulfilled

- ❑ Max. baking tray dimensions are adhered to (see 9.1 Technical specifications) .
- ❑ Baking tray has cooled to room temperature.
- ❑ The bottom door stopper is set at least one position up.

When door 90° is open:

▶ Slide the baking tray onto the lower side runs.

7.6 Drawers

You can remove the drawers for cleaning.

The shelves below can be used for storage until the drawers are replaced.

How the drawers are removed and inserted differs depending on the pull-out system. Your appliance can include a variety of pull-out systems.

7.6.1 Remove the drawer

Note
Insufficient ventilation results in an increase in energy consumption and reduction of the refrigerating performance.

▶ Leave the bottom drawer in appliance!
▶ Never obstruct the vents on the interior rear wall!

Drawer without pull-out system*

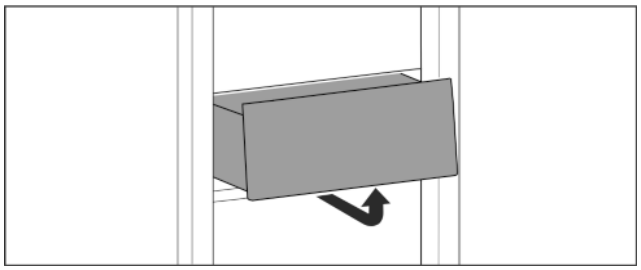

*Fig. 28**

▶ Remove the drawer as shown in the diagram.*

Drawer on retractable rails

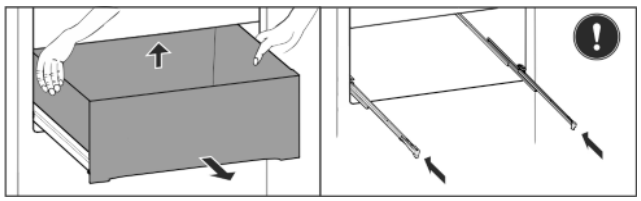

Fig. 29

▶ Pull out the drawer.
▶ Lift and pull away to the front.
▶ Slide the rails in.

7.6.2 Inserting the drawer

Drawer without pull-out system*

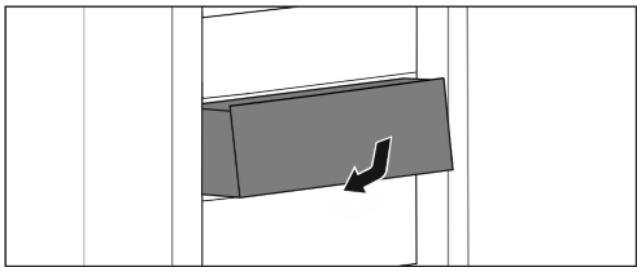

*Fig. 30**

▶ Insert the drawer as shown in the diagram.*

Drawer on retractable rails

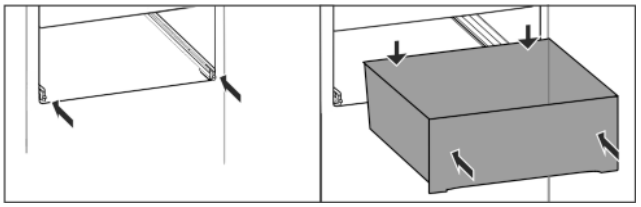

Fig. 31

Rails are in place.

▶ Slide the drawer all the way to the back on the rails.
▷ Click into place at the back.

7.7 EasyFresh-Safe

The compartment lid can be removed for cleaning.

7.7.1 Removing the compartment lid

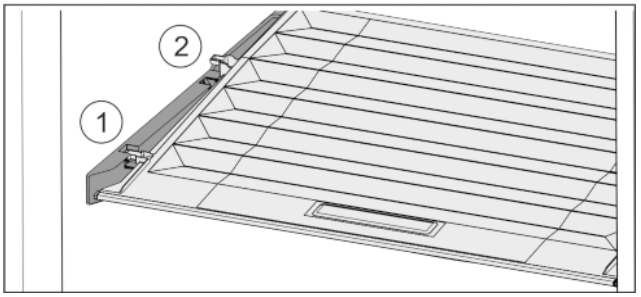

Fig. 32

If the drawers are removed:

▶ Pull the lid up at the front in the retaining parts to the opening *Fig. 32 (1)*.
▶ Lift from the back and pull it up and out *Fig. 32 (2)*.

7.7.2 Inserting the compartment lid

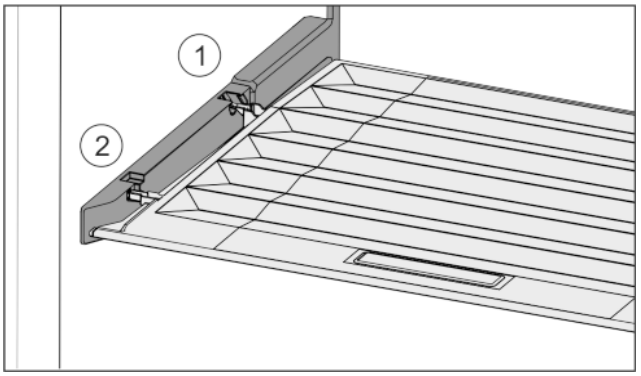

Fig. 33

▶ Insert the lip of the cover over the opening of the rear bracket *Fig. 33 (1)* and click into place *Fig. 33 (2)*.
▶ Position the cover where you want it (see 7.8 Humidity control) .

7.8 Humidity control

You can regulate the moisture in the drawer yourself by adjusting the compartment cover.

The compartment cover is on the drawer itself and can be covered with shelves or additional drawers.

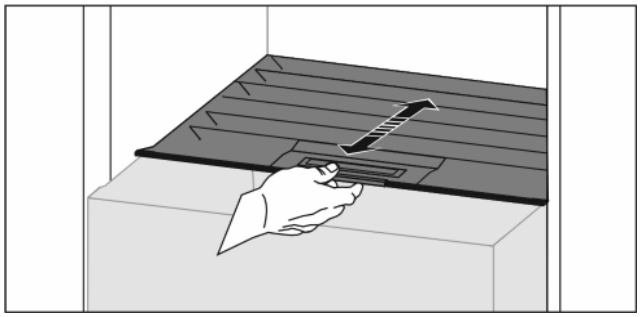

Fig. 34

Low air humidity

▶ Open the drawer.
▶ Pull the drawer cover to the front.
▷ If the drawer is closed: Gap between lid and compartment.
▷ Moisture levels lower in the Safe.

High air moisture:

▶ Open the drawer.
▶ Slide the compartment cover to the back.
▷ If the drawer is closed: The cover seals the compartment.
▷ Moisture levels rise in the Safe.
If there is too much moisture in the compartment:
▶ Choose a “low moisture setting”.

-or-

▶ Remove the moisture with a cloth.

7.9 IceMaker*

The IceMaker is used exclusively for the production of ice cubes in household quantities.

Make sure that the following conditions are fulfilled

- IceMaker is cleaned (see 8 Maintenance) .
- IceMaker drawer is fully inserted.

7.9.1 Producing ice cubes

The production capacity depends on the freezer temperature The lower the temperature, the more ice cubes can be produced in a certain period

Once IceMaker is switched on for the first time, it can take up to 24 hours to produce the first ice cubes.

▶ Activate the IceMaker (see 6.2 Operating logic) .
▶ To make a large quantity of ice cubes: Activate the MaxIce (see 6.2 Operating logic) .
▶ To make a large quantity of ice cubes: Move or remove the separators in the IceMaker drawer.*
▶ Distribute ice cubes evenly in the drawer to increase its capacity.
▶ Close the drawer: The IceMaker starts making ice again.

Note

When a certain level is reached in the IceMaker drawer, it stops making ice cubes. The IceMaker does not fill the drawer to the very top.

7.10 VarioSpace

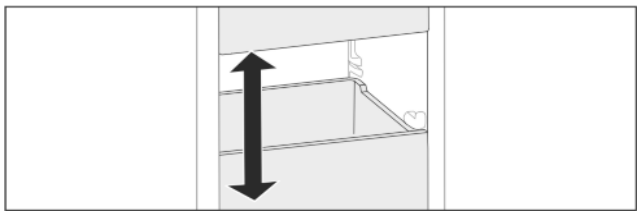

Fig. 35

You can remove the glass panels as well as the drawers. This provides more room for large food items such as poultry, joints of meat, large game, and tall baked goods. You can freeze these items whole for later preparation.

▶ Do not exceed the load capacity of the glass panels (see 9.1 Technical specifications) .

7.11 Accessories

7.11.1 Butter dish

Opening/closing the butter dish

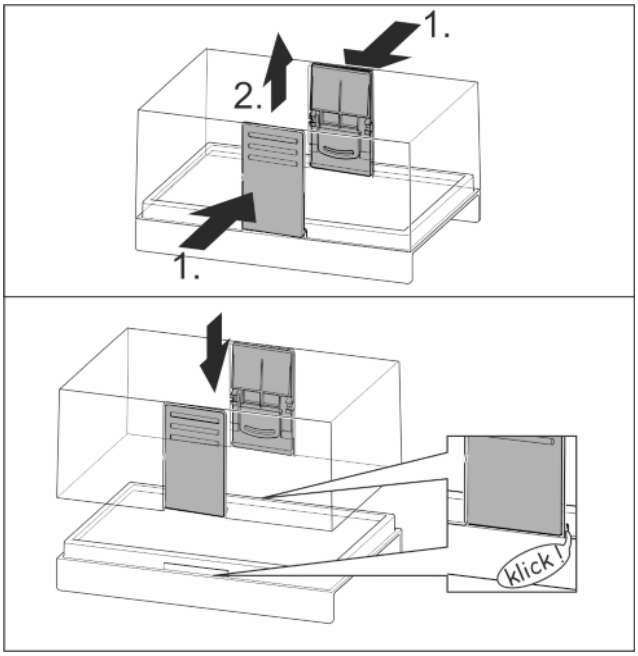

Fig. 36

Dismantling the butter dish

You can disassemble the butter dish for cleaning.

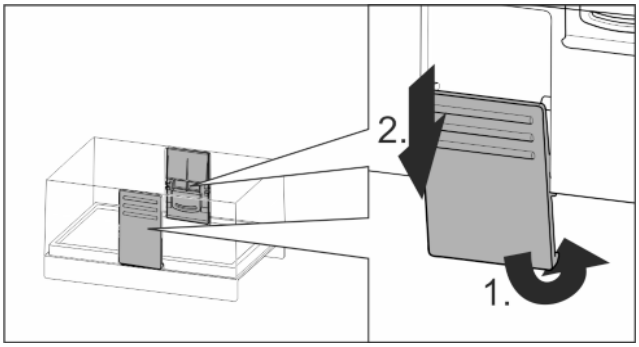

Fig. 37

▶ Disassemble the butter dish.

7.11.2 Egg rack

You can pull out and turn the egg rack. You can use both sides of the egg rack so you can label specifics like the purchase date.

Using the egg rack

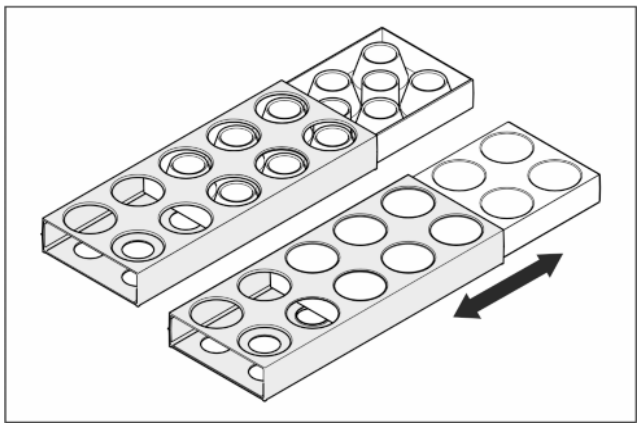

Fig. 38

▶ Top section: store hen eggs.
▶ Bottom section: store quail eggs.

7.11.3 Bottle rack

Using the bottle rack

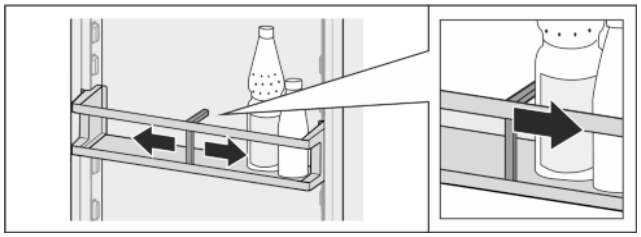

Fig. 39

▶ Slide the bottle rack at the edges.
▷ Stops bottles from tipping over.

Removing the bottle rack

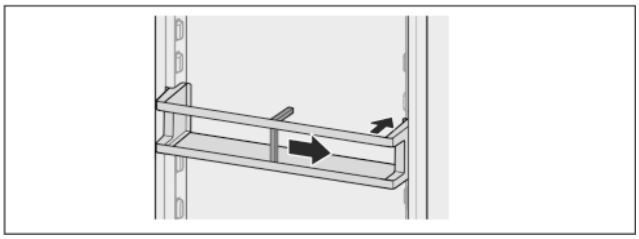

Fig. 40

▶ Slide the bottle rack all the way to the right edge.
▶ Remove to the back.

7.11.4 Freezer packs

The freezer packs prevent the temperature from rising too fast in the event of a power failure.

The freezer packs are in the drawer.

Using the freezer packs

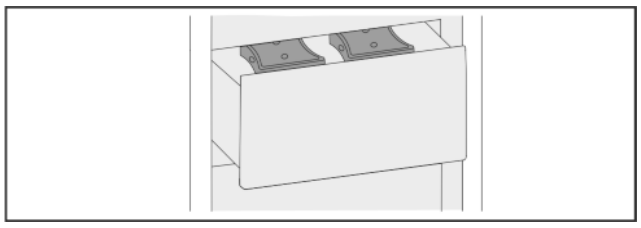

Fig. 41

When the freezer packs are fully frozen:

▶ Place on the frozen goods in the top, front part of the freezer.

7.11.5 Ice cube tray with lid*

Using the ice cube tray

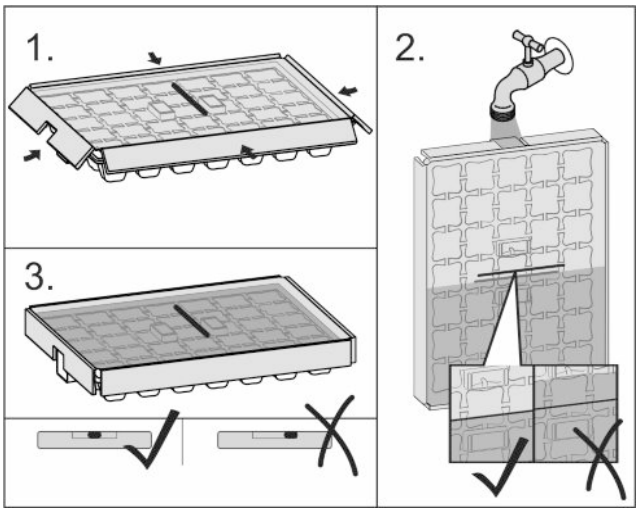

Fig. 42

When water is frozen:

▶ Hold the ice cube tray briefly under warm water.
▶ Remove the lid.
▶ Gently turn the ends of the ice cube tray in opposite directions.
▶ Release the ice cubes.

Dismantling the ice cube tray

You can dismantle the ice cube tray for cleaning.

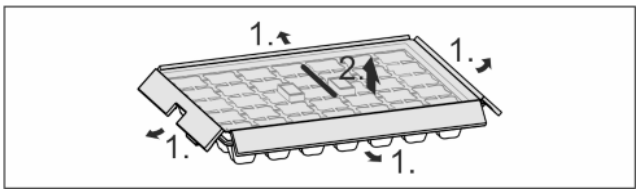

Fig. 43

▶ Disassemble the ice cube tray.

8 Maintenance

8.1 FreshAir carbon filter

The FreshAir carbon filter is located in the compartment above the fan.

It guarantees the best air quality.

❑ Change the carbon filter every 6 months.
With an active *Reminder*, a change prompt appears in the display.
❑ You can dispose of the carbon filter with the regular household waste.

Note
The FreshAir carbon filter is available for purchase from the Liebherr home appliance store (home.liebherr.com).

8.1.1 Removing the FreshAir carbon filter

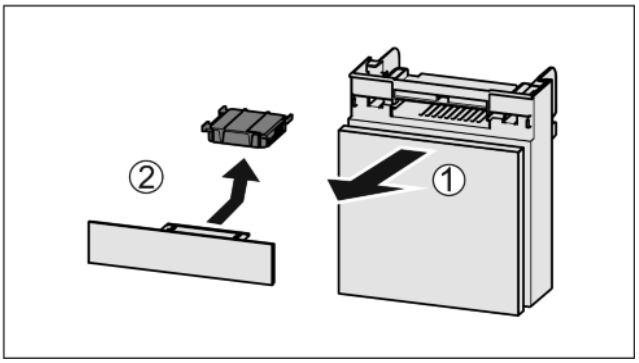

Fig. 44

▶ Pull out the compartment *Fig. 44 (1)*.
▶ Remove the carbon filter *Fig. 44 (2)*.

8.1.2 Inserting the FreshAir carbon filter

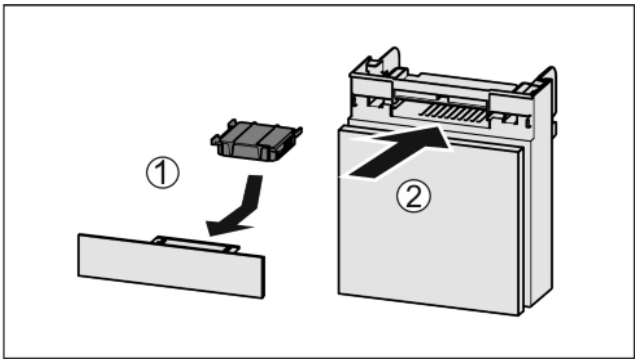

Fig. 45

▶ Insert the carbon filter as shown in the diagram *Fig. 45 (1)*.
▷ The carbon filter clicks into place.
If the carbon filter is pointing downwards:
▶ Push the compartment in *Fig. 45 (2)*.
▷ The carbon filter is now ready for use.

8.2 defrost the appliance

WARNING
Appliance incorrectly defrosted!
Injuries and damage.
▶ Do not use mechanical devices or other means to accelerate the defrosting process, other than those recommended by the manufacturer.
▶ Do not use any electrical heating or steam cleaning equipment, naked flames or defrosting sprays.
▶ Do not remove ice with sharp objects.
▶ Do not damage the pipes of the refrigerant circuit.

8.2.1 Defrosting the refrigerator

Defrosting is automatic. The thawing water drains through the outlet and evaporates.
▶ Clean the outlet regularly (see 8.3 Cleaning the appliance) .

8.2.2 Defrosting freezers with NoFrost

Defrosting is automatic with the NoFrost system. The moisture condenses on the evaporator and is periodically defrosted and evaporated
▶ The appliance does not have to be defrosted.

8.3 Cleaning the appliance

8.3.1 Preparation

WARNING
Danger of electric shock.
▶ Unplug refrigerator or disconnect power.

WARNING
Danger of fire
▶ Do not damage the refrigerant circuit.

▶ Empty appliance.

8.3.2 Cleaning the interior

NOTICE
Improper cleaning!
Damage to the appliance.
▶ Only use soft cleaning cloths and ph-neutral all-purpose cleaners.

▶ Plastic surfaces: clean by hand with a soft clean cloth, lukewarm water and a little detergent.
▶ Metal surfaces: clean by hand with a soft clean cloth, lukewarm water and a little detergent.
▶ Drain outlet *Fig. 1 (9)*: Remove any deposits with a thin item such as a cotton bud.

Remove stainless steel back panel:

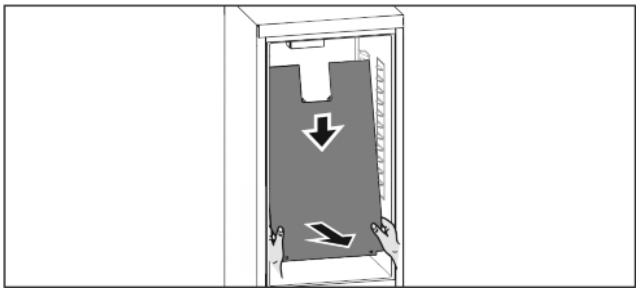

Fig. 46

You can remove the stainless steel back wall for cleaning.
With all equipment parts removed:
▶ Hold the back wall at the bottom with both hands and pull down forcefully at the same time.
▶ Pull the back wall down and out.
▷ The back wall is removed.
If the appliance is still used with the rear wall removed:
▶ Set *D-Value* to D2 (see D-Value) .

Insert the stainless steel back panel:

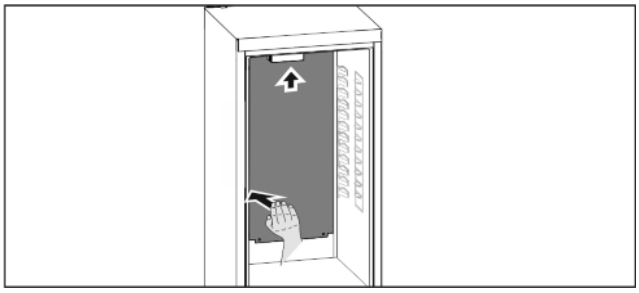

Fig. 47

With all equipment parts removed:
▶ Slide the back panel from bottom to top.
If the rear wall is inserted in the upper gap:
▶ Push the back panel on the left side forcefully backwards.
▷ Back wall snaps into place.

▶ Set *D-Value* to D1 (see D-Value) .

8.3.3 Cleaning the equipment

NOTICE
Improper cleaning!
Damage to the appliance.
▶ Only use soft cleaning cloths and ph-neutral all-purpose cleaners.

Clean with a soft, clean cloth, lukewarm water and a little washing up liquid:

- Drip tray
- VarioSafe
- EasyFresh-Safe
- Drawer

Clean with a damp cloth:

- Retracting rails
  Please note: the grease in the tracks is there for lubrication purposes and must not be removed!

Clean in the dishwasher up to 60 °C:

- Door racks
- VarioBox
- Bottle rack
- Shelf
- Split shelf
- Holder for the split shelf
- Egg rack
- Butter dish
- Ice cube tray*

▶ Disassemble the equipment: see the relevant section.
▶ Clean the equipment.

8.3.4 Cleaning the IceMaker*

There are various options for cleaning the IceMaker.

We recommend cleaning in the following situations:

❑ Initial commissioning
❑ If out of use for longer than 5 days.

Make sure that the following requirements are met:

❑ IceMaker drawer is emptied.
❑ IceMaker drawer is fully inserted.
❑ IceMaker is on (see 6.2 Operating logic) .

On first use or if not used for prolonged periods

Clean the IceMaker with TubeClean.
▶ Place a 1.5 l empty container (max. height 10 cm) in the drawer under the IceMaker.
▶ Activate the TubeClean (see 6.2 Operating logic) .
▶ Take out the IceMaker drawer and remove the container.
▶ Clean the IceMaker drawer with warm water and a little detergent.
▶ Push in the IceMaker drawer.
▷ Ice cube production starts automatically.
▶ Dispose of any ice cubes that are produced within 24 hours of the first ice cube production.

When cleaning is required

Clean the IceMaker manually.
▶ Remove the IceMaker drawer and clean with warm water and a little detergent.
▶ Push in the IceMaker drawer.
▷ Ice cube production starts automatically.

8.3.5 After cleaning

▶ Wipe dry the appliance and items of equipment
▶ Connect and switch on the appliance.
▶ Activate SuperFrost (see 6.3 Functions) .
When the temperature is sufficiently cold
▶ Place the food inside.
▶ Repeat cleaning regularly.

9 Customer support

9.1 Technical specifications

Temperature zone	
Cool:	2 °C to 9 °C
Freezing	-26 °C to -15 °C

Maximum freezing capacity / 24 hrs	
Freezer	See nameplate, “Freezing capacity … / 24h”

Max. equipment capacity			
Equipment	Appliance width 55 cm (see Installation Guide, Appliance Dimensions)	Appliance width 60 cm (see Installation Guide, Appliance Dimensions)	Appliance width 70 cm (see Installation Guide, Appliance Dimensions)
Drawer Freezer	12 kg	12 kg	
Glass panel, freezer	35 kg	35 kg	55 kg

Max. size baking tray	
Width	466 mm
Depth	386 mm
Height	50 mm

Ice cube production*	
Ice cube production / 24 h	At -18 °C: 90 to 100 ice cubes
Max. ice cube production / 24 h	With MaxIce on: 130 ice cubes

Lighting	
Energy efficiency class[1]	Light source
This product contains an energy efficiency class F light source	LED

1 The appliance may contain light sources with different energy efficiency classes. The lowest class is given here.

9.2 Operating noises

The appliance makes noises while in operation.

- At **less cooling output** the appliance saves energy but takes longer to cool items. The volume is **lower**.
- At **a higher cooling output** the food cools more quickly. The volume is **higher**.

  Examples:
  - Activated functions (see 6.3 Functions)
  - Running fan
  - Freshly sorted food
  - High ambient temperature
  - Door opened for long periods

Noise	Possible cause	Type of noise
Bubbling and splashing	Coolant is flowing into the cooling circuit.	Normal noise
Spitting and hissing	Coolant is spraying into the cooling circuit.	Normal noise
Humming	The appliance cools. The volume depends on the cooling output.	Normal noise
Sipping noises	The self-closing door is being opened and closed.	Normal noise
Whirring and murmuring	The fan is running.	Normal operating noise
Clicking	Components are being switched on/off	Normal switching noise
Rattling or humming	Valves are active.	Normal switching noise

Noise	Possible cause	Type of noise	How to resolve
Vibration	Unsuitable installation.	Error noise	Check installation. Set up the appliance.
Clattering	Equipment, Objects inside the appliance	Error noise	Secure equipment parts. Leave a gap between items.

9.3 Technical faults

Your appliance is designed and manufactured for reliable operation and a long service life. If a malfunction nonetheless occurs during operation, please check whether the malfunction is due to an operating error. In this case, you will have to be charged for the costs incurred, even during the warranty period.

You may be able to rectify the following faults yourself.

9.3.1 Appliance function

Defect	Cause	Remedy
The appliance does not work.	→ The appliance is not switched on.	▶ Switch on the appliance.
	→ The power plug is not properly inserted in the wall socket.	▶ Check the power plug.
	→ The powerfuse in the wall socket is not OK.	▶ Check the fuse.
	→ Power failure.	▶ Keep the appliance closed. ▶ Protect your food: Lay freezer packs on top of the food or use another freezer if the power is off for a prolonged period. ▶ Do not re-freeze defrosted food.
	→ The appliance connector is not correctly inserted in the appliance.	▶ Check the appliance connector.
The temperature is not cold enough	→ This means that the door of the appliance is not closed properly	▶ Close the appliance door
	→ Insufficient ventilation	▶ Clear and clean the ventilation grille.
	→ The ambient temperature is too high	▶ Solution: (see 1.3 Range of appliance use) .
	→ The appliance was opened too frequently or for too long	▶ Wait to see whether the required temperature resets itself by itself. If not, contact Customer Service (see 9.4 Customer service) .
	→ Too much fresh food was placed inside without SuperFrost.	▶ Solution: (see SuperFrost)
	→ The appliance is too near to a heat source (stove, heater etc).	▶ Change location of appliance or the heat source.
	→ The appliance was not properly installed in the recess.	▶ Make sure the appliance was installed correctly and the door closes properly.
The door seal is defective or should be replaced for other reasons.	→ The door seal is interchangeable. You can replace it without the use of any special tools.	▶ Contact Customer Service (see 9.4 Customer service) .
The appliance is iced up or condensation is building.	→ The door seal may have slipped out of its groove.	▶ Check the door seal is well placed in the groove.

9.3.2 Equipment

Defect	Cause	Remedy
The IceMaker cannot be switched on.*	→ The appliance and therefore the IceMaker are not connected.	▶ Connect the appliance (see Installation Guide).
The IceMaker is not making any ice cubes.*	→ The IceMaker is not switched on.	▶ Activate the IceMaker.
	→ The drawer of the IceMaker is not properly closed	▶ Close the drawer properly
	→ The water connection is not open	▶ Open the water connection
The interior light does not turn on.	→ The appliance is not switched on.	▶ Switch on the appliance.
	→ The door was open for longer than 15 min.	▶ The interior light automatically switches itself off if the door stays open for approx. 15 min.
	→ The LED interior light is faulty or the cover is damaged:	**WARNING** Risk of injury from electrical shock. Live parts are under the cover. ▶ The LED interior light should only be replaced or repaired by the Customer Service department or by engineers trained to do so. **WARNING** Risk of injury from LED lamp! The light intensity of the LED lighting corresponds to risk group RG 2. If the cover is faulty: ▶ Do not gaze directly at this lighting unit with optical lenses while very close to the light source. This can cause damage to your eyes.

9.4 Customer service

First check if you can fix the error yourself (see 9 Customer support) . If this is not the case, please contact customer service.

Please refer to the enclosed “Liebherr Service” brochure for the address.

WARNING
Risk of injury from repairs by non-professionals.
▶ Repairs and work on the appliance and the power supply cable not described in the Manual (see 8 Maintenance) should only be carried out by a qualified service provider.

9.4.1 Contact Customer Service

Make sure to have the following appliance information to hand:

❑ Appliance name (model and index)
❑ Service no. (service)
❑ Serial no. (S no.)

▶ Showing appliance info on the display (see Info) .
-or-
▶ Referring to appliance info on the nameplate (see 9.5 Rating plate) .

▶ Take note of the appliance information.
▶ Inform Customer Service: Tell us the problem and the appliance details.
▷ This will help us give you fast and accurate support.
▶ Further instructions from customer service will follow.

9.5 Rating plate

The nameplate is located behind the drawers on the inside of the appliance.

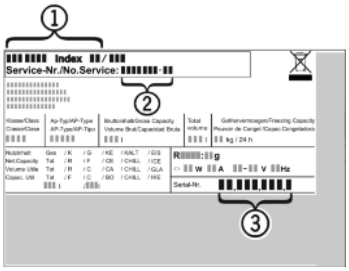

Fig. 48

(1) Appliance name **(3)** Serial no.
(2) Service no.

▶ Information from the nameplate.

10 Decommissioning

▶ Empty appliance.
▶ Switch off the IceMaker .*
▶ Switch off the appliance (see 6.4 Settings) .
▶ Pull out the power plug.
▶ Remove the appliance connector if necessary: Pull it out and, at the same time, move it from the left to the right.
▶ Clean the appliance (see 8.3 Cleaning the appliance) .
▶ Leave the door open to prevent bad smells

11 Disposing of the appliance



The device still contains valuable materials and must be collected separately from unsorted municipal waste so it can be recycled. Disused devices must be disposed of in a proper and professional manner according to the locally applicable regulations and laws.

When transporting the disused appliance, do not damage the coolant circuit to prevent the coolant (information on the nameplate)) or oil from leaking in an uncontrolled manner.

For Germany:

The appliance can be disposed of free of charge in Class 1 collection containers at your local recycling center. When purchasing a new fridge/freezer and if your sales area is > 400 m^2, the retailer with also take back the old appliance free of charge.

Decommission the appliance:

▶ Disconnect the power plug.
▶ Remove the connection cable from the appliance.



home.liebherr.com/fridge-manuals

EN Built-in combined fridge-freezer

Issue date: 20210409
Part number index: 7088255-00

Liebherr-Hausgeräte Ochsenhausen GmbH
Memminger Straße 77-79
88416 Ochsenhausen
Deutschland