MWI 3445 BL

12NC: F163061

GTIN (EAN) code: 8050147630617



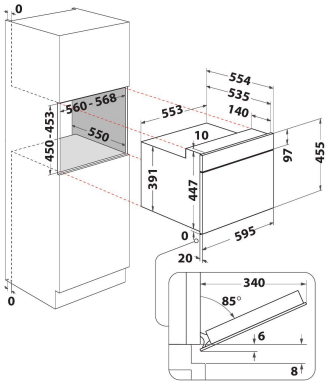

MAIN FEATURES

Product group	Microwave
Commercial code	MWI 3445 BL
Main colour of product	Black
Type of micro-wave oven	MW-Combi
Construction type	Built-in
Type of control	Electronic
Type of control settings	LCD
Additional cooking method Grill	Yes
Crisp	No
Steam	No
Additional cooking method Fan cooking	Yes
Clock	Yes
Automatic programmes	Yes
Height of the product	455
Width of the product	595
Depth of the product	560
Minimum niche height	450
Minimum niche width	556
Niche depth	550
Net weight (kg)	31.3
Cavity capacity (l)	40
Turntable	Yes
Turntable diameter (mm)	360
Integrated Cleaning system	No

TECHNICAL FEATURES

Current (A)	16
Voltage (V)	230
Frequency (Hz)	50
Length of Electrical Supply Cord (cm)	135
Plug type	Schuko
Timer	Yes
Grill power (W)	1600
Type of grill	Heating element
Cavity material	Stainless steel
Interior light	Yes
Additional cooking method Grill	Yes
Position of interior lights of the cavity	Right side

PERFORMANCES

6th Sense / Dynamic Intelligence	No
Number of power levels	7
Maximum micro-wave power (W)	900
Bread defrost	No
Jet defrost	Yes
Jet start	Yes