User Guide

fridge/freezer

EN

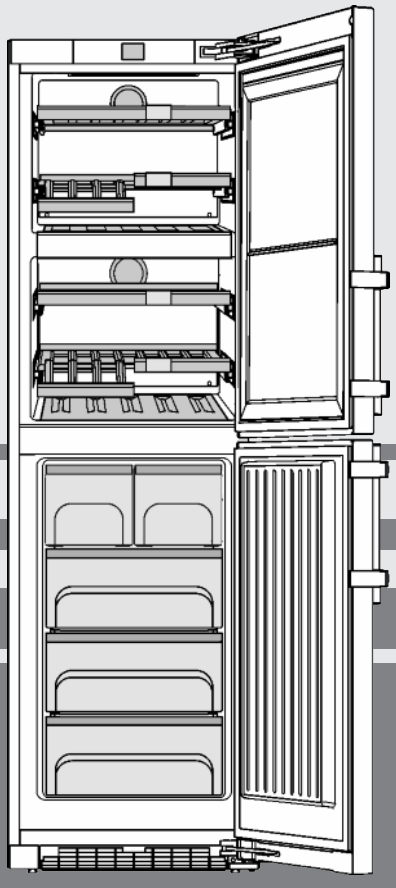

20210908 **7088193 - 01**

SWTNes

LIEBHERR

Contents

1	**Appliance at a glance**	**2**
1.1	Description of appliance and equipment	2
1.2	Appliance range of use	2
1.3	Conformity	3
1.4	EPREL database	3
1.5	Installation dimensions	3
1.6	Saving energy	3
1.7	Example of food arrangement	4
1.8	Smart device	4
2	**General safety information**	**4**
3	**Controls and displays**	**5**
3.1	Home screen	5
3.2	Operating structure	5
3.3	Navigation	6
3.4	Display symbols	6
3.5	Appliance options	6
4	**Putting into operation**	**6**
4.1	Transporting the appliance	6
4.2	Installing the appliance	7
4.3	Reversing the door	8
4.4	Water connection	16
4.5	Sliding into the row of units	17
4.6	Disposing of packaging	18
4.7	Connecting the appliance	18
4.8	Switching on the appliance	18
4.9	SmartDevice box	19
4.10	Inserting the FreshAir filter.	19
4.11	Setting the clean ventilation grid timer	20
5	**Control**	**20**
5.1	Changing the temperature unit	20
5.2	Child proofing	20
5.3	SabbathMode	20
5.4	Freezer compartment	20
5.5	Wine zone	23
6	**Maintenance**	**24**
6.1	Change the FreshAir filter	24
6.2	Defrosting with NoFrost	25
6.3	Cleaning the ventilation grid	25
6.4	Cleaning the appliance	25
6.5	Cleaning the IceMaker	26
6.6	Customer service	26
7	**Malfunctions**	**26**
8	**Messages**	**27**
9	**Decommissioning**	**29**
9.1	Switching the appliance off	29
9.2	Taking the appliance out of service	29
10	**Disposing of the appliance**	**29**

The manufacturer works constantly on the further development of all the types and models. Therefore please understand that we have to reserve the right to make design, equipment and technical modifications.

To get to know all the benefits of your new appliance, please read the information contained in these instructions carefully.

The instructions apply to several models. Differences may occur. Text relating only to specific appliances is marked with an asterisk (*).

Instructions are marked with a , and results are marked with a .

1 Appliance at a glance

1.1 Description of appliance and equipment

Exemplary illustration of the appliance model

Note

▶ Shelves, drawers and baskets are arranged for optimum energy efficiency when the appliance is delivered. Changing how the shelves, for example, are inserted in the fridge compartment does not have any impact on energy consumption.

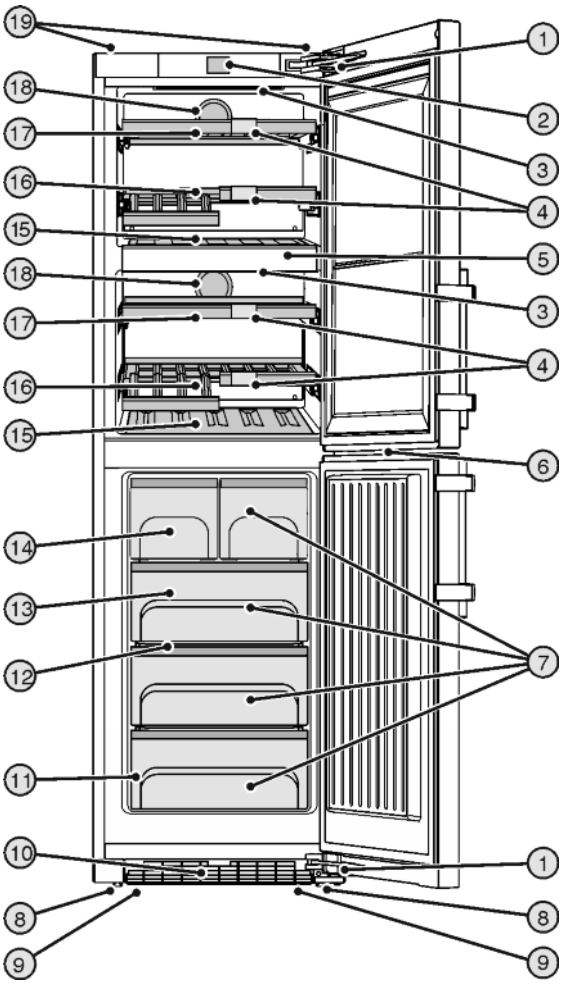

Fig. 1

(1) Soft closing fittings
(2) Operating and control elements
(3) LED interior lighting
(4) Labelling clip
(5) Divider
(6) Freezer compartment LED light
(7) Freezer compartment
(8) Adjusting feet
(9) Front transport handles, rear transport castors
(10) Ventilation grid
(11) Type plate
(12) VarioSpace
(13) Freezer pack
(14) IceMaker
(15) Wine rack
(16) Wooden shelf, folding
(17) Wooden shelf, fixed
(18) Active carbon filter
(19) Rear transport handles

1.2 Appliance range of use

Intended use

The appliance must only be used in a domestic or a normal household setting. Only drinks

such as wine must be stored in the wine compartment. Only frozen food must be stored in the freezer compartment. This includes, for example, using

- in staff kitchens, bed and breakfast establishments,
- by guests in country houses, hotels, motels and other accommodation,
- for catering and similar services in the wholesale trade.

The appliance is not suitable as a built-in unit.

All other types of use are not permitted.

Foreseeable misuse

The following applications are expressly forbidden:

- Storing and refrigerating medicines, blood plasma, laboratory preparations or similar substances and products based on the Medical Device Directive 2007/47/EC
- Use in areas at risk of explosions
- Use on moving substrates, such as ships, rail travel or aeroplanes
- Storing live animals

Misusing the appliance may lead to damage to the goods stored or they may spoil.

Climate classifications

Depending on the climate classification the appliance is designed to operate in restricted ambient temperatures. The climate classification applying to your appliance is printed on the rating plate.

Note

▶ Keep to the specified ambient temperatures in order to guarantee that the appliance works properly.

Climate classification	for ambient temperatures of
SN	10 °C to 32 °C
N	16 °C to 32 °C
ST	16 °C to 38 °C
T	16 °C to 43 °C

1.3 Conformity

The refrigerant circuit has been tested for leaks. This device complies with the applicable safety regulations and with the directives 2014/35/EU, 2014/30/EU, 2009/125/EC, 2011/65/EU, 2010/30/EU and 2014/53/EU.

The full text of the EU Declaration of Conformity is available on the following website: www.Liebherr.com

1.4 EPREL database

Details about energy labelling and ecodesign requirements will be available on the European product database (EPREL) from 1st March 2021. You can access the product database at the following link: https://eprel.ec.europa.eu/ You will be asked to enter the model ID. You can find the model ID on the nameplate.

1.5 Installation dimensions

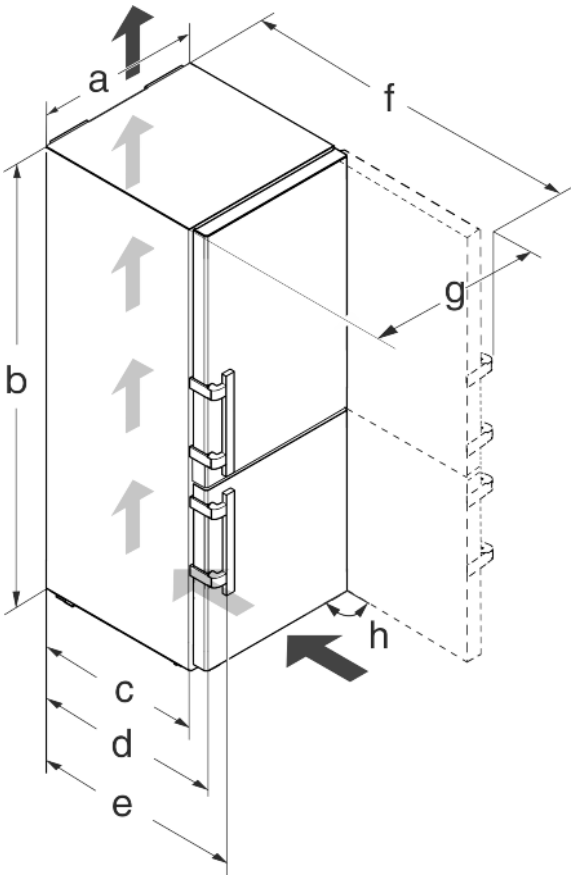

Fig. 2

Model	a [mm]	b [mm]	c [mm]	d [mm]	e [mm]	f [mm]	g [mm]	h [°]
SWTNes 42..	600	1850	600 x	665 x	709 x	1223 x	640	90

x When using wall spacers, the dimensions increase by 15 mm (see 4.2 Installing the appliance) .

1.6 Saving energy

- Pay attention to good ventilation. Do not cover ventilation holes or grids.
- Always keep the fan air slits clear.
- Do not install the appliance in direct sunlight, next to an oven, radiator or similar.
- Energy consumption depends on the installation conditions, e.g. the ambient temperature (see 1.2 Appliance range of use) . A warmer ambient temperature can increase the energy consumption.
- Open the appliance for as short a time as possible.
- The lower the temperature is set the higher the energy consumption.
- Inserting warm food: allow to cool down to room temperature first.

1.7 Example of food arrangement

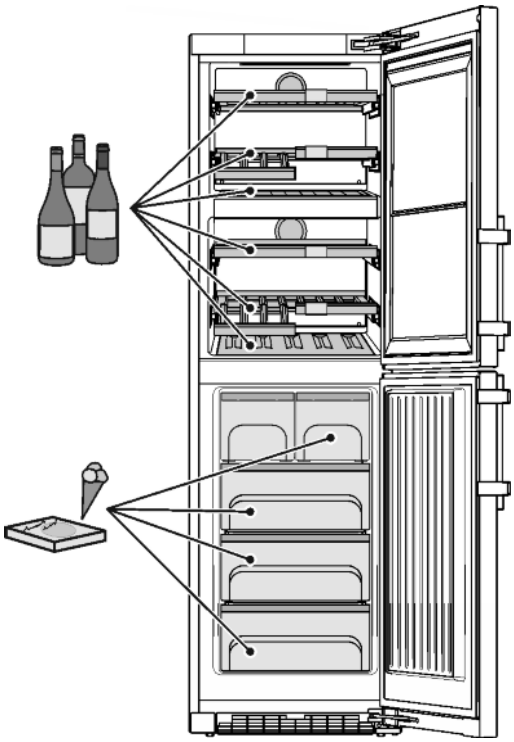

Fig. 3

1.8 Smart device

The appliance is ready for integration into a smart home and for extended services. With a SmartDevice Box, you can activate this and other options. This is activated via the MyLiebherr customer portal.



Note
The SmartDevice Box is available for purchase from the Liebherr Household Store (home.liebherr.com).

You will find more information about availability and prerequisites and the individual options on the website, www.smartdevice.liebherr.com.

2 General safety information

Danger for the user:

- This device can be used by children and people with impaired physical, sensory or mental abilities or with a lack of experience and knowledge provided that they are supervised or have received instruction in the safe use of this device, and about the resulting hazards. Children must not play with this appliance. Cleaning and user maintenance work must not be carried out by children without adult supervision. Children aged between 3 and 8 are allowed to load and unload the appliance. Children below the age of 3 must be kept away from the appliance unless they are under continuous adult supervision.
- When disconnecting the appliance from the supply, always take hold of the plug. Do not pull the cable.
- In the event of a fault pull out the mains plug or deactivate the fuse.
- Do not damage the mains power cable. Do not operate the appliance with a defective mains power cable.
- Only customer service or other specially trained staff may repair or perform other operations on the appliance.
- Only assemble, connect and dispose of the appliance according to the instructions.
- Please keep these instructions in a safe place and pass them on to any subsequent owners.
- The manufacturer is not liable for damage caused by a faulty fixed water connection.

Fire hazard:

- The coolant used (information on the model plate) is eco-friendly but also flammable. Any leaking coolant may ignite.
  - Do not damage the refrigerant circuit pipes.
  - Do not handle ignition sources inside the appliance.
  - Do not use electrical appliances inside the appliance (e.g. steam cleaners, heaters, ice cream makers, etc.).
  - If the refrigerant leaks: remove any naked flames or ignition sources from the vicinity of the leakage point. Properly air the room. Inform customer services.
- Do not store explosives or sprays using combustible propellants such as butane, propane, pentane, etc. in the appliance. To identify these spray cans, look for the list of contents printed on the can, or a flame symbol. Gases possibly escaping may ignite due to electrical components.
- Keep burning candles, lamps and other items with naked flames away from the appliance so that they do not set the appliance on fire.
- Please be sure to store alcoholic drinks or other packaging containing alcohol in tightly closed containers. Any alcohol that leaks out may be ignited by electrical components.

Danger of tipping and falling:

- Do not misuse the plinth, drawers, doors etc. as a step or for support. This applies particularly to children.
- Danger of tipping if the door is open if the appliance has not yet been installed properly.

Danger of food poisoning:

- Do not consume food which has been stored too long.

Danger of frostbite, numbness and pain:

- Avoid prolonged skin contact with cold surfaces or refrigerated/frozen goods or take protective measures, e.g wear use gloves.

Danger of injury and damage:

- Hot steam can lead to injury. Do not use electrical heating or steam cleaning equipment, open flames or defrosting sprays to defrost.
- Do not use sharp implements to remove the ice.

Danger of crushing:

- Do not hold the hinge when opening and closing the door. Fingers may get caught.

Symbols on the appliance:



The symbol can be located on the compressor. It refers to the oil in the compressor and indicates the following danger: Swallowing or inhaling can be fatal. This is only relevant for recycling. There is no danger in normal operation.



This symbol is found on the compressor and indicates the danger of flammable materials. Do not remove the sticker.



A sticker to this effect may be applied to the rear of the appliance. It refers to the foam-padded panels in the door and/or the housing. This is only relevant for recycling. Do not remove the sticker.

Please observe the specific information in the other sections:

⚠	DANGER	identifies a situation involving direct danger which, if not obviated, may result in death or severe bodily injury.
⚠	WARNING	identifies a dangerous situation which, if not obviated, may result in death or severe bodily injury.
⚠	CAUTION	identifies a dangerous situation which, if not obviated, may result in minor or medium bodily injury.
	NOTICE	identifies a dangerous situation which, if not obviated, may result in damage to property.
	Note	It contains useful instructions and tips.

3 Controls and displays

3.1 Home screen

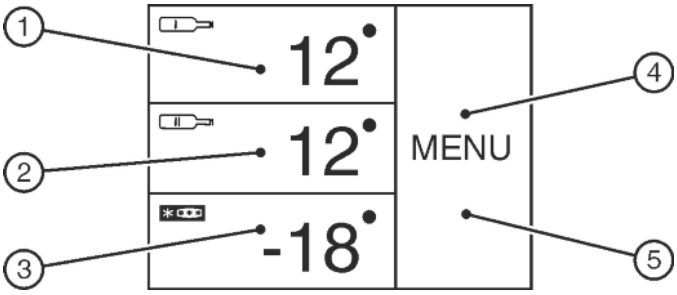

Fig. 4

(1) Top wine cooling field
(2) Bottom wine cooling field
(3) Freezer compartment field
(4) Menu field
(5) Screen

The home screen is the first screen the user sees. All settings can be made from there.

All functions can be called up by touching the screen and values can be changed.

3.2 Operating structure

Wine cooling field

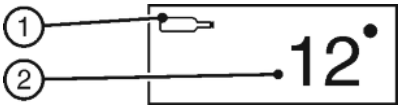

Fig. 5

(1) Wine cooling compartment symbol
(2) Wine cooling compartment temperature display

The set temperature is displayed in the wine cooling field.

The following settings can be entered:

- Temperature settings
- Switching the wine cooling compartment on and off

Freezer compartment field

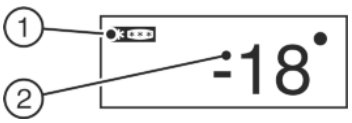

Fig. 6

(1) Freezer compartment symbol
(2) Freezer compartment temperature display

The freezer compartment temperature is displayed in the freezer compartment field.

The following settings can be entered:

- Temperature settings
- Switch off appliance. Screen remains functional.

Menu field

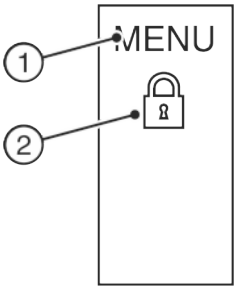

Fig. 7

(1) Main menu
(2) Option selected

The menu field gives access to the appliance options and settings. Selected options are also displayed.

3.3 Navigation

Touch the menu to access the individual options. An audible signal sounds after confirming an option or a setting. The display switches to the home screen.

The appliance is operated using the following symbols:



Standby:

Switches the appliance or temperature zone on.



Menu:

Calls up options.



Minus / Plus:

Changing settings (e.g. adjusting temperatures).



Left/right navigation arrow:

Selects options and navigates through the menu.

You can scroll through the individual options using the navigation arrows. The first option is displayed again after the last one.

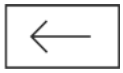

Back:

Cancels the selection.

The display switches to the next higher level or to the home screen



OK:

Confirms the selection.

After confirmation the display switches to the home screen.



ON / OFF, START / STOP

Starts/ stops options.



After selecting or cancelling an option the display switches to the home screen.



RESET:

Resets timer.



Access to customer service

Note

If no selection is made after 1 minute the display switches to the home screen.

3.4 Display symbols

Display symbols provide information on the current appliance status:



Up arrows:

The temperature increases.



Down arrows:

The temperature reduces.



Standby:

The appliance or temperature zone is switched off.



Messages:

There are active error messages and reminders.

3.5 Appliance options

You can select or set the following options; explanations and setting options, (see 5 Control) :

Symbol	Option
	SuperFrost[x]
	Fan[x]
	SabbathMode
	Dim mode
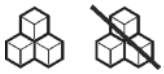	IceMaker[x]
	Child safety device[x]
	Temperature unit

[x] If the option is selected, the relevant symbol is displayed in the menu field.

If more than 6 selected options are selected only 4 options are displayed in the menu field. The other options are displayed by pressing the bottom navigation arrow. Pressing the navigation arrow repeatedly takes you back to the home screen.

The symbol disappears if the option ends or is disabled.

4 Putting into operation

4.1 Transporting the appliance

WARNING

Risk of injury due to broken glass!

In case of transport at an altitude of over 1500 m the glass panes of the door may break. The fragments have sharp edges and may cause serious injury.

▶ Take appropriate protective action.

▶ Transport the appliance only in suitable packaging.

▶ Transport the appliance upright.

▶ Do not transport the appliance on your own.

4.2 Installing the appliance

WARNING
Fire hazard due to dampness!
If live parts or the mains lead become damp this may cause short circuits.
▶ The appliance is designed for use in enclosed areas. Do not operate the appliance outdoors or in areas where it is exposed to splash water or damp conditions.

WARNING
Risk of fire due to short circuit!
If the mains cable/connector of the appliance or of another appliance touch the rear of the appliance, the mains cable/connector may be damaged by the appliance vibrations, leading to a short circuit.
▶ Stand the appliance so that it is not touched by connectors or main cables.
▶ Do not plug the appliance or any others into sockets located near the rear of the appliance.

WARNING
Fire hazard due to refrigerant!
The coolant used is eco-friendly but also flammable. Any leaking coolant may ignite.
▶ Do not damage the piping of the refrigeration circuit.

WARNING
Fire hazard and danger of damage!
▶ Do not place appliances emitting heat e.g. microwaves, toasters etc. on the appliance!

WARNING
Blocked ventilation openings pose a risk of fire and damage!
▶ Always keep the ventilation openings clear. Always ensure that the appliance is properly ventilated!

If your appliance is not a side-by-side (SBS) appliance:*

NOTICE
Risk of damage due to condensate!*
▶ Do not install the appliance directly alongside a further refrigerator/freezer.

Note
If you have several appliances next to one another, leave a gap of 70mm between appliances. Otherwise condensation will build up between the units.*

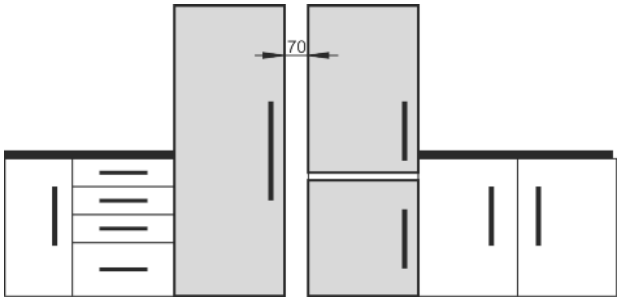

*Fig. 8**

❑ Before you connect the appliance, report any damage immediately to the delivery company.
❑ The floor of the installation site must be horizontal and even.
❑ Do not install the appliance in direct sunlight, next to an oven, radiator or similar.
❑ Install the appliance with the rear panel up against the wall and always use the supplied wall spacers (see below).
❑ Only ever move the appliance when it is empty.
❑ The surface supporting the appliance must be at the same level as the surrounding floor.
❑ Do not install the appliance on your own.
❑ The more coolant there is in the appliance, the larger the room in which the appliance is installed must be. If the room is too small, any leak may create a flammable mixture of gas and air. For each 8 g of coolant the installation space must be at least 1 m^3. Information on the coolant is on the model plate inside the appliance.

▶ Remove the protective film from the outside of the appliance.

NOTICE
Risk of damage from stainless steel care products!
The **stainless steel doors** and **stainless steel side panels** are treated with a premium surface finish.

Stainless steel care products attack these surfaces.
▶ Only use a soft, clean cloth to wipe down **finished door and side panel surfaces** and **painted door and side panel surfaces**. To remove heavy dirt, use a little water or neutral detergent. Alternatively, you can use a micro-fibre cloth.

▶ Remove all transit supports.

Spacers must be used to achieve the declared energy consumption and to prevent condensation in the event of high surrounding humidity. This increases the appliance depth by about 15 mm. The appliance will work perfectly well without the spacers but will have a slightly higher energy consumption.
▶ If your appliance comes with wall spacers, mount these on the back of the appliance, bottom left and right.

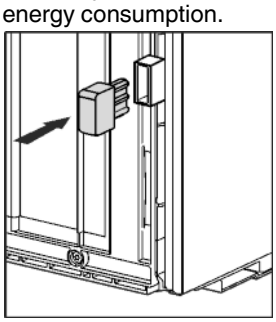

▶ Dispose of packaging material (see 4.6 Disposing of packaging) .

CAUTION
Risk of injury or damage from the appliance tipping or the door falling open!
If the additional adjustable foot on the base support is not correctly positioned on the floor, there is a risk of the door falling open or the appliance tipping. This can lead to injury or property damage.
▶ Unscrew the additional adjustable foot on the support until it reaches the floor.
▶ Then turn it another 90°.

▶ Align the appliance so that it stands firmly and on a level by applying the accompanying spanner to the adjustable-height feet (A) and using a spirit level.
▶ Then support the door: Extend the adjustable foot at the turn hinge (B) until it rests on the floor and then make a further 90° turn.

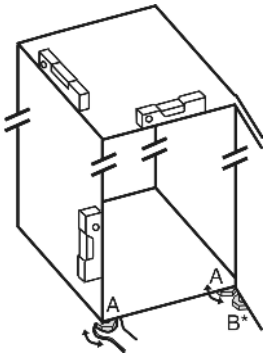

When a Side-by-Side appliance (S…) is fitted together with a second appliance (as a SBS combination):*
▶ Proceed according to the Side-by-Side combined fridge-freezer installation instructions. (Accessories bag of the SBS freezer/appliance with freezer compartment)*

Note
▶ Clean the appliance (see 6.4 Cleaning the appliance) .

If the appliance is installed in a very damp environment, condensate may form on the outside of the appliance.
▶ Always see to good ventilation at the installation site.

4.3 Reversing the door

If necessary, you can change the way the door opens:

Ensure that the following tools are available:
❑ Torx® 25 (T25)
❑ Torx® 15 (T15)
❑ Slotted screwdriver
❑ Open-ended wrench SW10
❑ Spirit level
❑ Open-ended wrench supplied with the T25 tool
❑ If necessary, a cordless screwdriver
❑ Get a stepladder if necessary
❑ If necessary, a second person for assembly

NOTICE
Risk of condensation damage for Side-by-Side appliances!*
Certain appliances can be set up as Side-by-Side combinations (two appliances next to each other).
If your appliance is **a Side-by-Side (SBS) appliance**:
▶ Set up the SBS combination in accordance with the enclosed document.
If the **positioning of the devices is stipulated**:
▶ Do not change the door hinges over.

4.3.1 Remove the upper soft stop mechanism

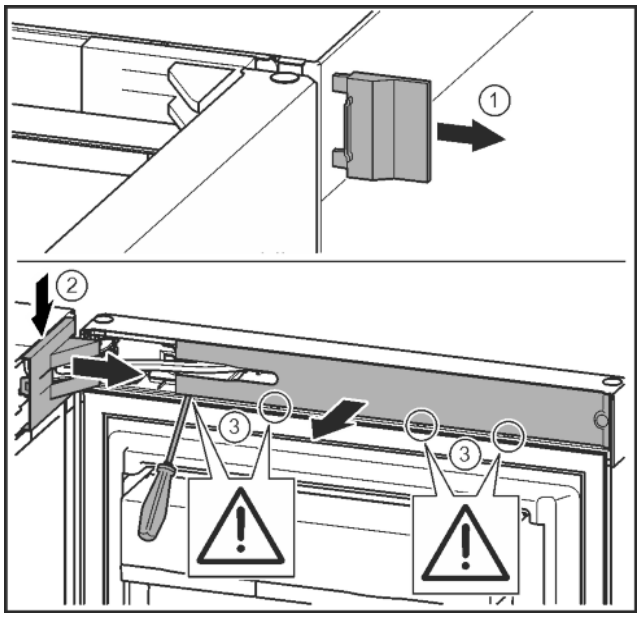

Fig. 9
▶ Open the top door.

NOTICE
Risk of damage!
If the door seal is damaged, the door may fail to close properly and the cooling will be inadequate.
▶ Do not damage the door seal with the screwdriver!

▶ Remove the outer cover. *Fig. 9 (1)*
▶ Disengage and release the bearing bracket cover. Remove the bearing bracket cover. *Fig. 9 (2)*
▶ Unlatch the panel with a slotted screwdriver and swivel it to one side. *Fig. 9 (3)*

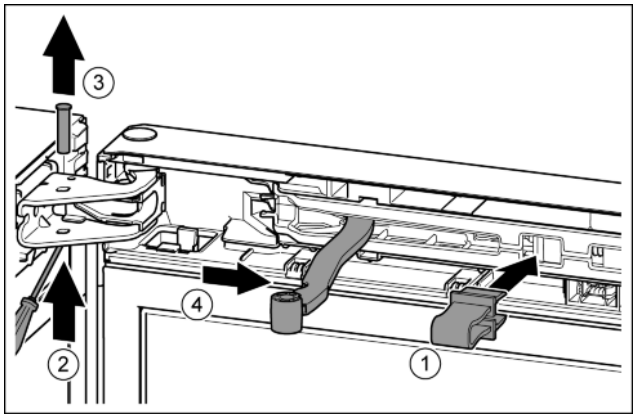

Fig. 10

CAUTION
Crushing hazard by joint folding up!
▶ Engage safety device.

▶ Engage the locking device in the opening. *Fig. 10 (1)*
▶ Unscrew the bolt with a screwdriver. *Fig. 10 (2)*
▶ Remove the bolt in an upward direction. *Fig. 10 (3)*
▶ Turn the hinge in the direction of the door. *Fig. 10 (4)*

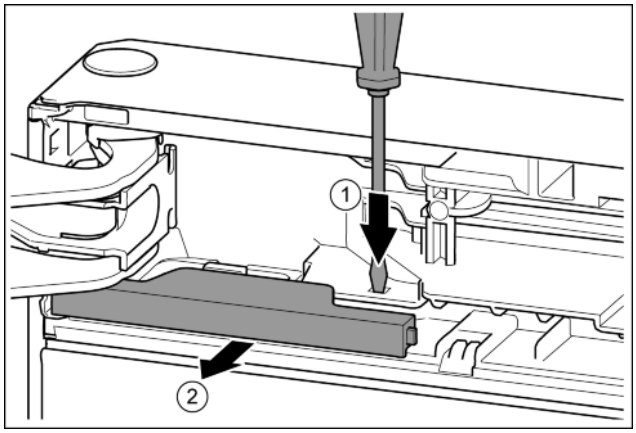

Fig. 11

▶ Press the tab with the slotted screwdriver. *Fig. 11 (1)*
▶ Pull cover out of the catch mechanism. *Fig. 11 (2)*

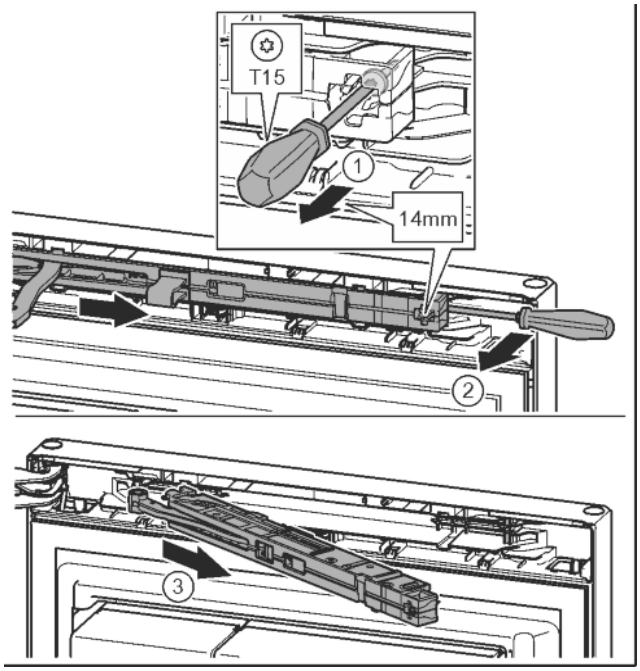

Fig. 12

▶ Undo the soft stop mechanism screw with a T15 screwdriver approx. 14 mm. *Fig. 12 (1)*
▶ Insert a screwdriver behind the soft stop mechanism on the handle side and rotate forwards. *Fig. 12 (2)*
▶ Remove the soft stop mechanism. *Fig. 12 (3)*

4.3.2 Remove the bottom soft stop mechanism

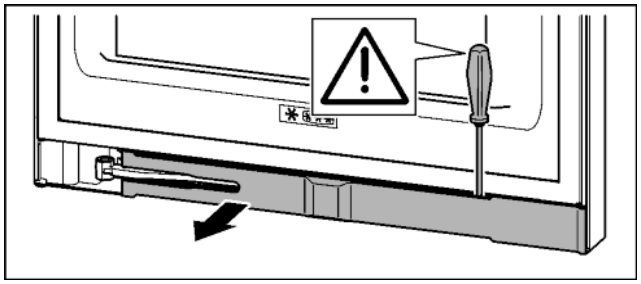

Fig. 13

▶ Open the bottom door.

NOTICE
Risk of damage!
If the door seal is damaged, the door may fail to close properly and the cooling will be inadequate.
▶ Do not damage the door seal with the screwdriver!

▶ Unlatch the panel with a slotted screwdriver and swivel it to one side.

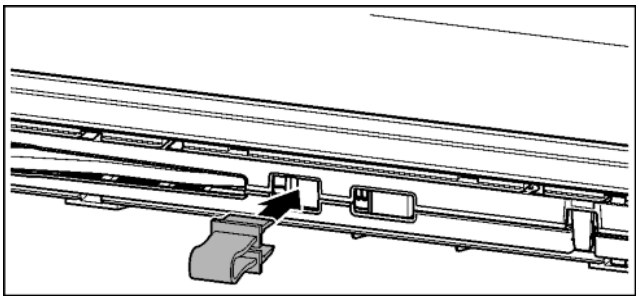

Fig. 14

CAUTION
Crushing hazard by joint folding up!
▶ Engage safety device.

▶ Engage the locking device in the opening.

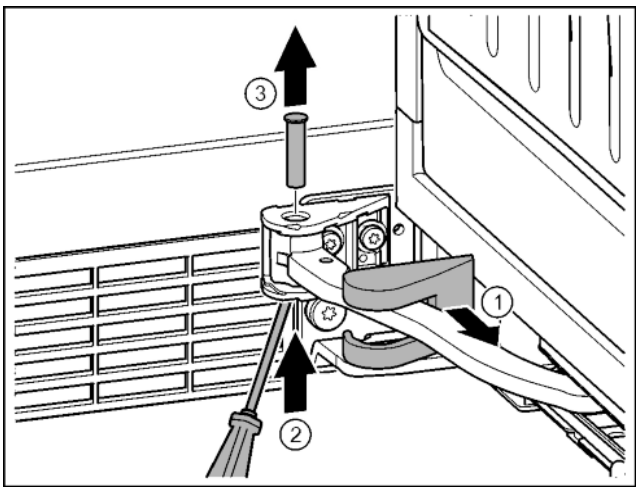

Fig. 15

▶ Remove the bearing bracket cover and push it along the hinge. *Fig. 15 (1)*
▶ Lift the bolt with a finger or screwdriver from below. *Fig. 15 (2)*
▶ Insert the screwdriver under the bolt head and remove. *Fig. 15 (3)*

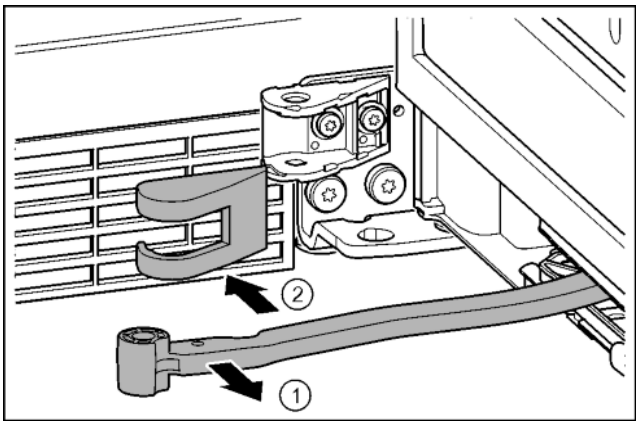

Fig. 16

▶ Turn the hinge in the direction of the door. *Fig. 16 (1)*
▶ Remove the bearing bracket cover. *Fig. 16 (2)*

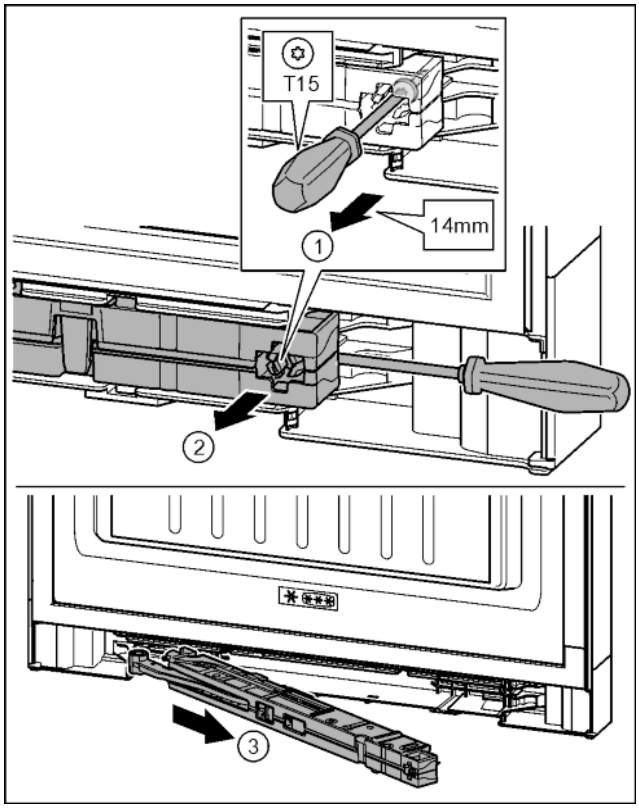

Fig. 17

- ▶ Undo the screw on the soft stop mechanism about 14 mm with a T15 screwdriver. *Fig. 17 (1)*
- ▶ Insert the screwdriver on the handle side behind the soft stop mechanism. Turn the unit forwards. *Fig. 17 (2)*
- ▶ Remove the unit. *Fig. 17 (3)*
- ▶ Set aside the soft stop mechanism.

4.3.3 Remove the cable connection

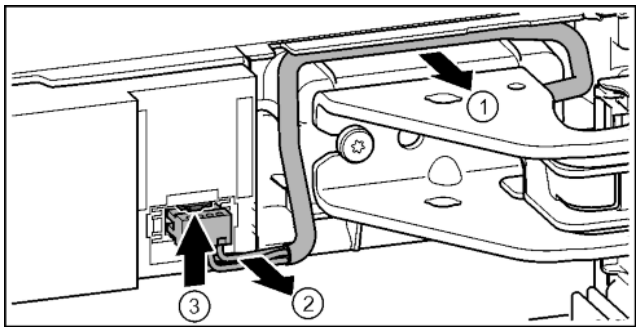

Fig. 18

- ▶ Carefully remove the cable over the bearing bracket from the guide. *Fig. 18 (1)*
- ▶ Carefully pull the cable strands out of the channel. *Fig. 18 (2)*
- ▶ Press the tab upwards and carefully remove the plug. *Fig. 18 (3)*

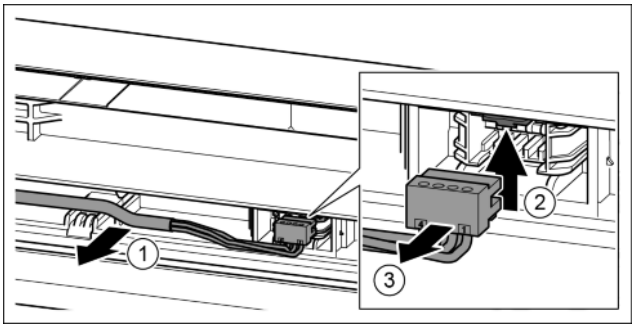

Fig. 19

- ▶ Carefully remove the grey cable from the guide in the door. *Fig. 19 (1)*
- ▶ Press the tab upwards. *Fig. 19 (2)*
- ▶ Carefully remove the plug. *Fig. 19 (3)*

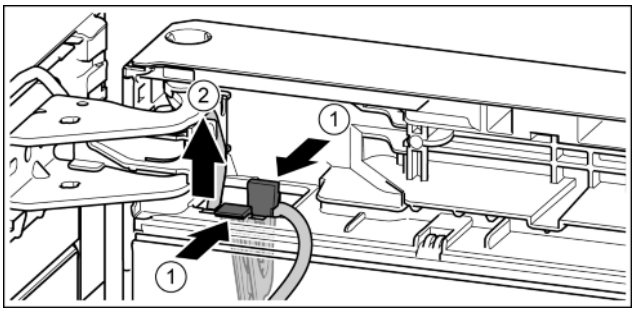

Fig. 20

- ▶ Press the tab. *Fig. 20 (1)*
- ▶ Remove the cable holder with its cable. *Fig. 20 (2)*

4.3.4 Removing the top door

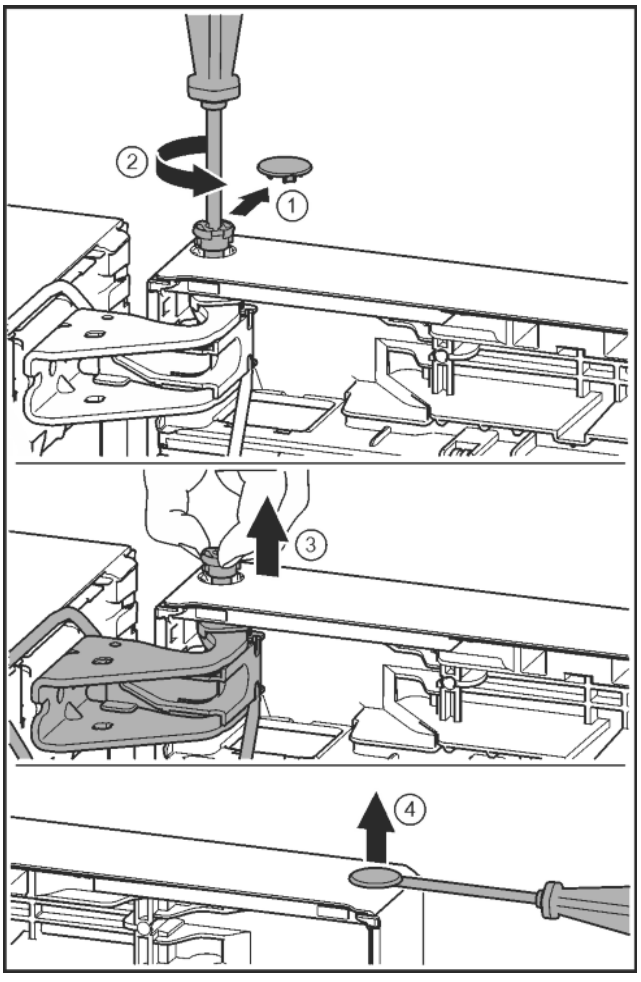

Fig. 21

*** Depending on model and options**

CAUTION
Risk of injury if the door tips!
▶ Take good hold of the door.
▶ Set down the door carefully.

▶ Carefully remove the protective cover. *Fig. 21 (1)*
▶ Undo the bolt a little with a T15 screwdriver. *Fig. 21 (2)*
▶ Hold the door and remove the bolts with your fingers. *Fig. 21 (3)*
▶ Lift the door and set it aside.
▶ Carefully lift the plugs out of the door bearing bush with a slotted screwdriver and remove. *Fig. 21 (4)*

4.3.5 Removing the lower door

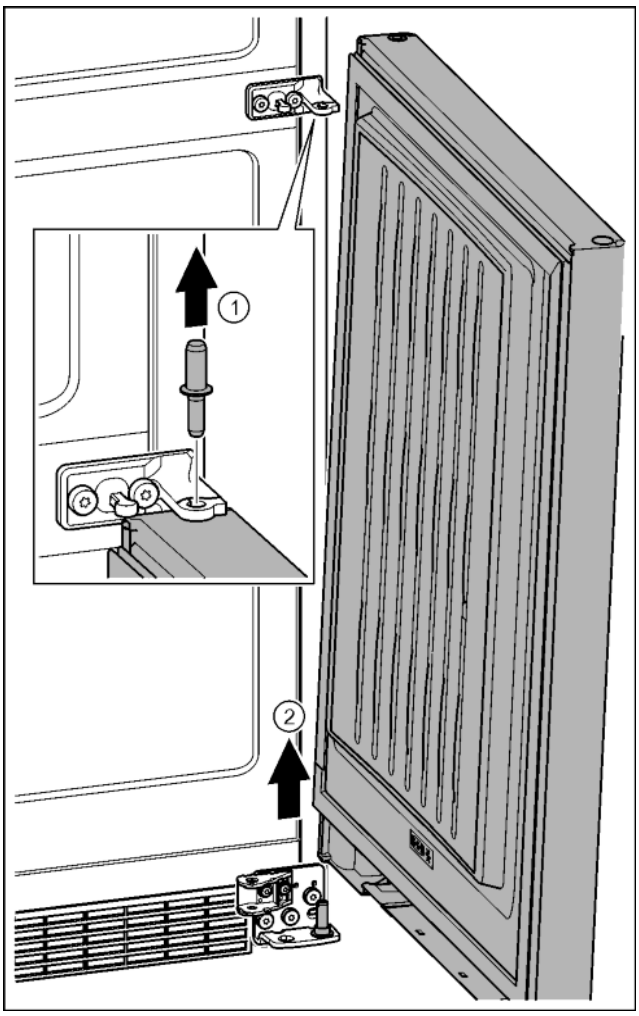

Fig. 22

CAUTION
Risk of injury if the door tips!
▶ Take good hold of the door.
▶ Set down the door carefully.

▶ Pull out the bolts towards the top. *Fig. 22 (1)*
▶ Swing the door out, pull it upwards and set it aside. *Fig. 22 (2)*

4.3.6 Moving the upper bearing parts to the other side

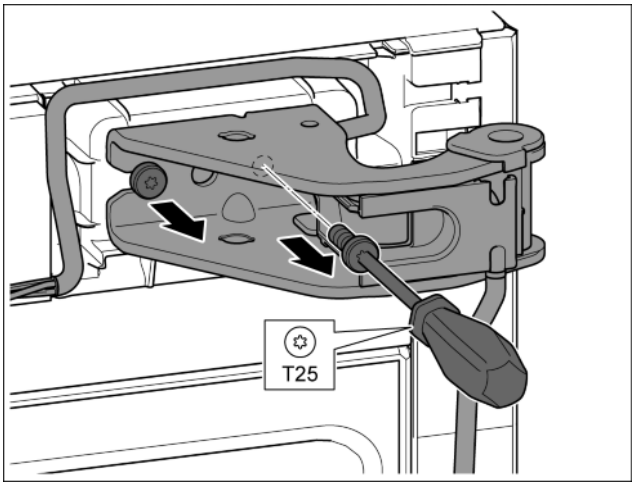

Fig. 23
▶ Remove both screws with the T25 screwdriver.
▶ Lift and remove the bearing bracket and cable.

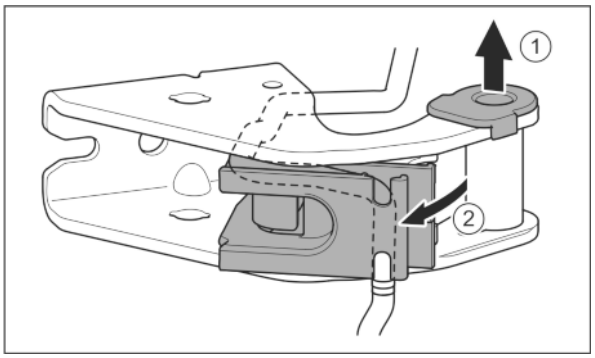

Fig. 24
▶ Pull the bearing bush out of the guide. *Fig. 24 (1)*
▶ Swing the cable holder out. *Fig. 24 (2)*

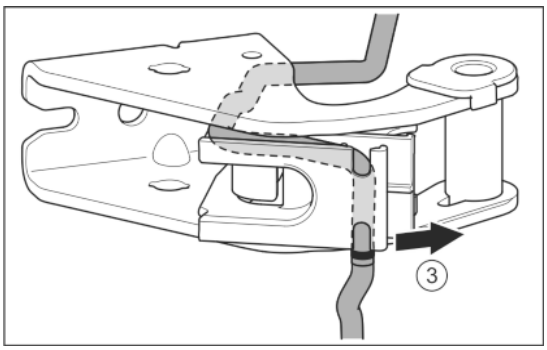

Fig. 25
▶ Remove the cable from the guide. *Fig. 25 (3)*

NOTICE
Cable crushing
▶ Pay attention to the mark when positioning the cable. The shorter end of the cable is positioned from the mark in the cable holder.

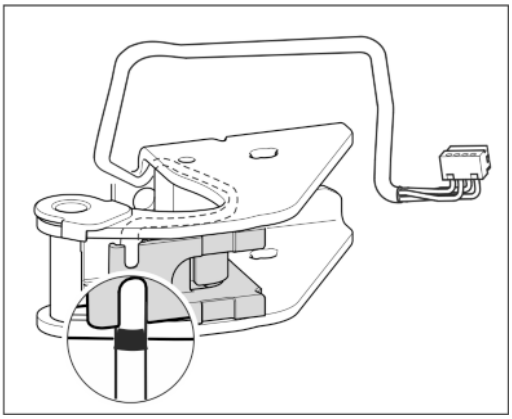

Fig. 26

▶ Insert the cable mirror inverted.
▷ The black mark must be positioned on the edge of the cable holder.
▶ Swing the cable holder in.

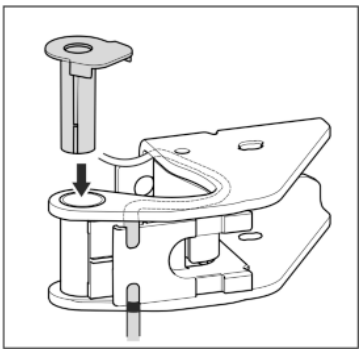

Fig. 27

▶ Insert the bearing bush from the other side and click into place.

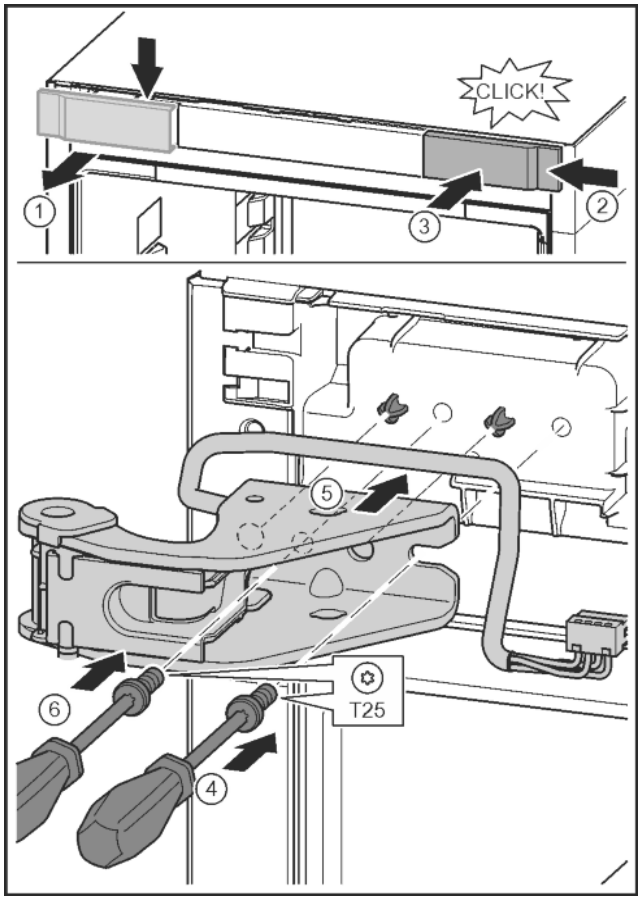

Fig. 28

▶ Release the cover and remove from the side. *Fig. 28 (1)*
▶ Rotate the cover 180° and clip onto the other side from the right. *Fig. 28 (2)*
▶ Click the cover into place. *Fig. 28 (3)*
▶ Position the screw with a T25 screwdriver. *Fig. 28 (4)*
▶ Position the upper bearing bracket. *Fig. 28 (5)*
▷ Place the pins in the provided screw holes.
▶ Tighten the screw. *Fig. 28 (4)*
▶ Insert the screw with a T25 screwdriver and tighten. *Fig. 28 (6)*

4.3.7 Moving the central bearing parts to the other side

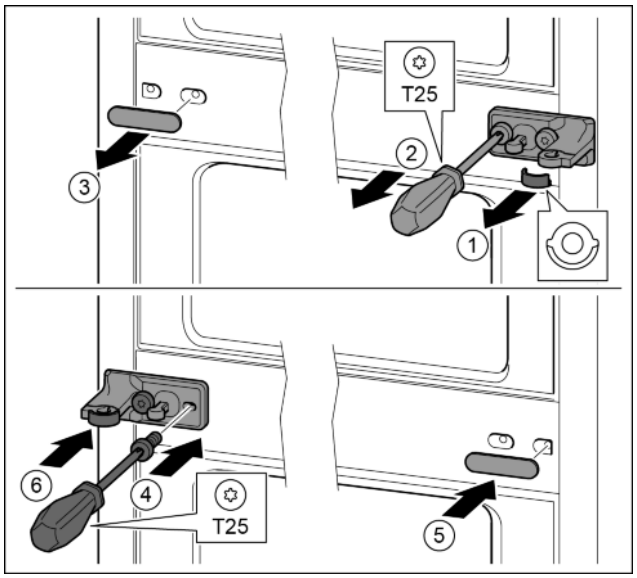

Fig. 29

▶ Remove the washer. *Fig. 29 (1)*
▶ Remove the screws with the T25 screwdriver. *Fig. 29 (2)*
▶ Remove the cover carefully. *Fig. 29 (3)*
▶ Screw the bearing bracket and the film rotated 180° firmly onto the other side. *Fig. 29 (4)*
▶ Attach the cover rotated 180° onto the other side. *Fig. 29 (5)*
▶ Push the washer in from the front. *Fig. 29 (6)*

4.3.8 Moving the lower bearing parts to the other side

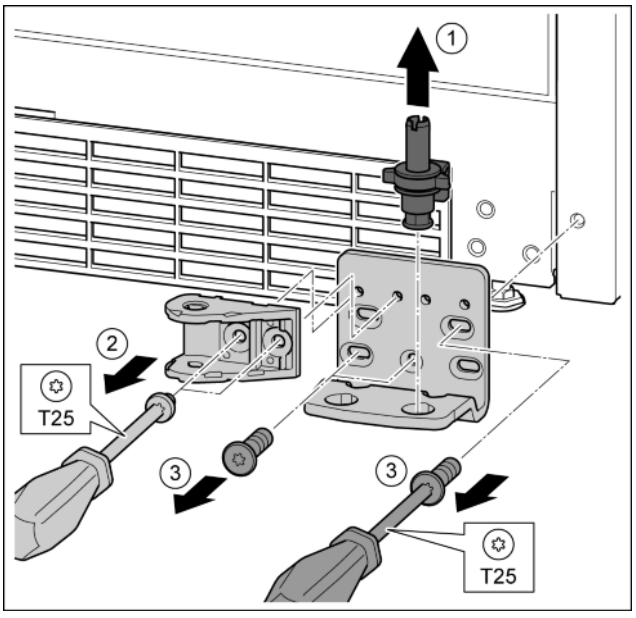

Fig. 30

▶ Lift the bearing pin completely upward and remove. *Fig. 30 (1)*
▶ Remove the screws with the T25 screwdriver and remove the soft stop connection. *Fig. 30 (2)*

▶ Undo the screws with a T25 screwdriver and remove the bearing bracket *Fig. 30 (3)*

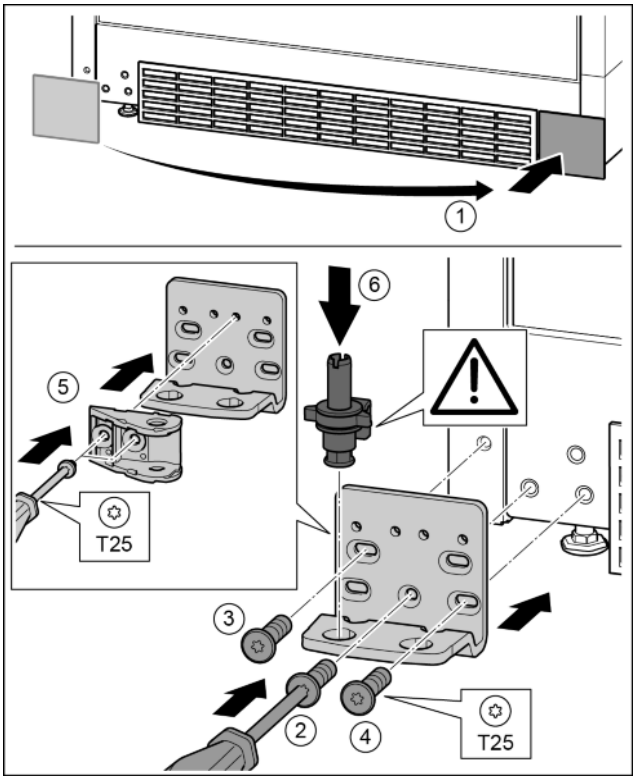

Fig. 31

▶ Remove the cover and fix it on the other side. *Fig. 31 (1)*
▶ Place the bearing bracket on the other side and screw in with the aid of a T25 screwdriver. Start with screw 2 at the bottom in the middle. *Fig. 31 (2)*
▶ Screw in screws 3 and 4. *Fig. 31 (3, 4)*
▶ Rotate the soft stop connection 180°. Screw in with a T25 screwdriver on the other side of the bearing bracket. *Fig. 31 (5)*
▶ Insert the bearing pin completely. Make sure that the catch mechanism is pointing to the rear. *Fig. 31 (6)*

4.3.9 Moving the door bearing parts to the other side

Top door

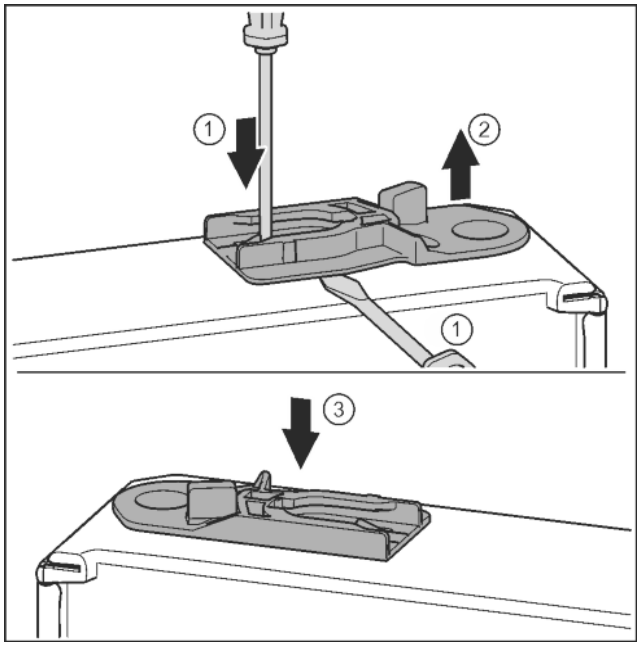

Fig. 32

▶ Underside of door faces upwards: Turn the door.
▶ Pull out the guide bush: Press the tab with a slotted screwdriver and, at the same time, insert the slotted screwdriver under the guide bush. *Fig. 32 (1, 2)*
▶ Slide the guide bush included in the scope of supply to the other side of the housing. *Fig. 32 (3)*
▶ Upper side of door faces upwards: Turn the door.

4.3.10 Moving the handles to the other side

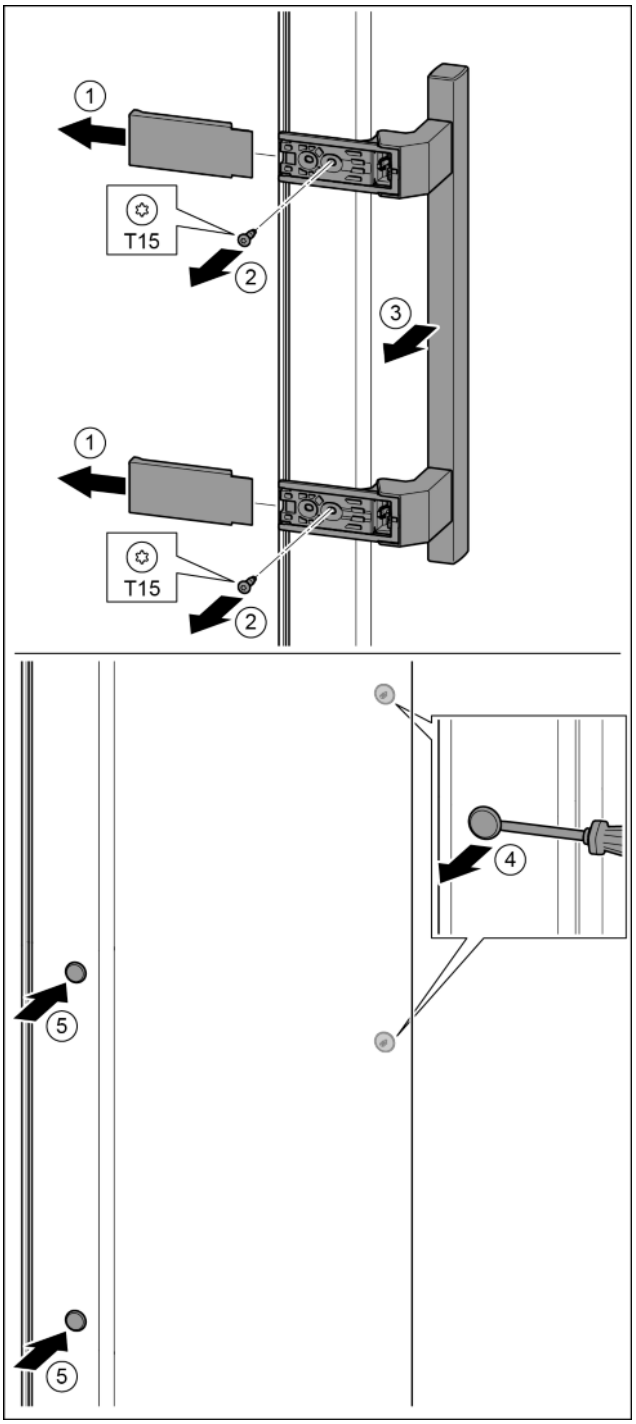

Fig. 33

▶ Pull off the cover. *Fig. 33 (1)*
▶ Remove the screws with the T15 screwdriver. *Fig. 33 (2)*
▶ Remove the handle. *Fig. 33 (3)*
▶ Carefully lift up the side plugs with a slotted screwdriver and pull them out. *Fig. 33 (4)*
▶ Insert the plugs again on the other side. *Fig. 33 (5)*

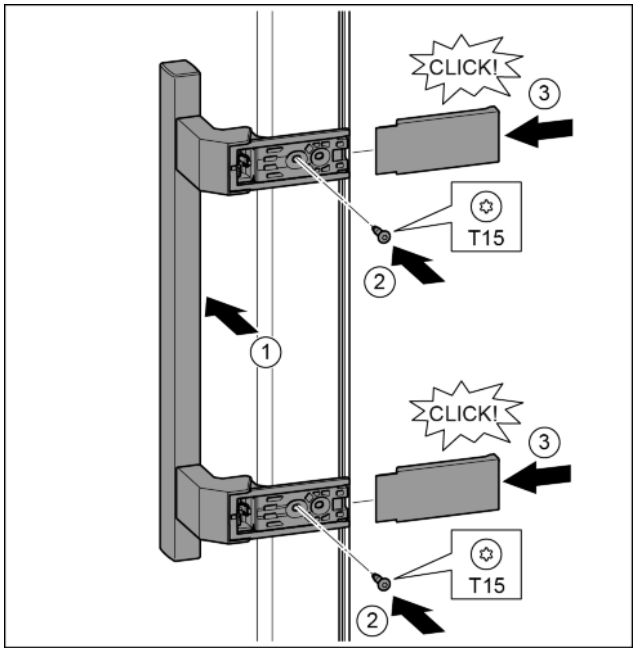

Fig. 34

▶ Position the handle on the other side. *Fig. 34 (1)*
▷ The screw holes must be exactly above each other.
▶ Tighten the screws with the T15 screwdriver. *Fig. 34 (2)*
▶ Position the covers on the side and push in. *Fig. 34 (3)*
▷ Ensure that it clicks into place.

4.3.11 Fitting the bottom door

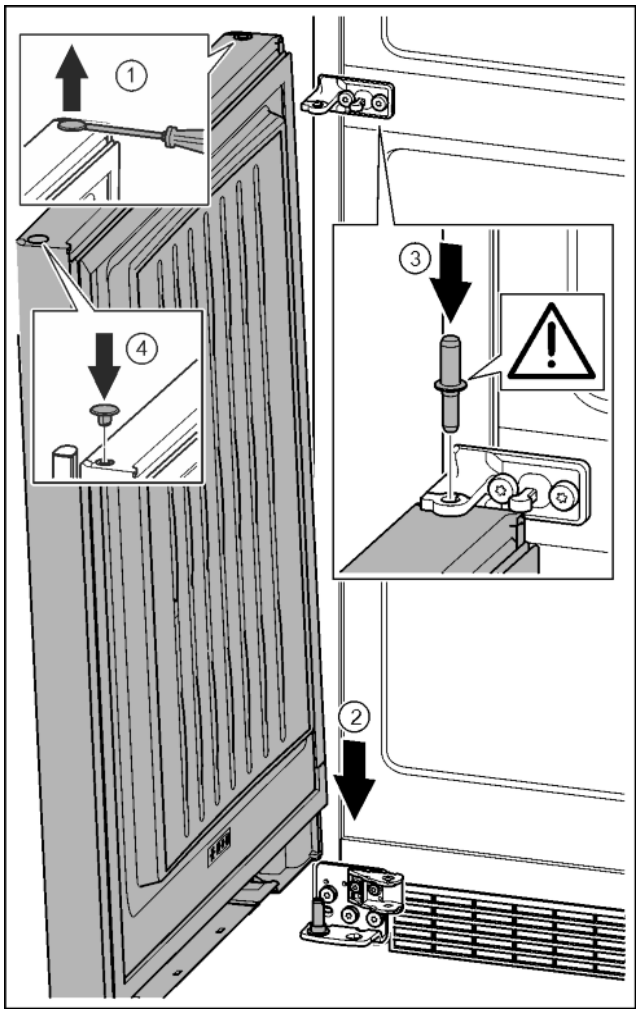

Fig. 35

▶ Carefully lift up the plugs with a slotted screwdriver and remove them. *Fig. 35 (1)*
▶ Position the door from above onto the lower bearing pins. *Fig. 35 (2)*
▶ Insert the centre bearing pin through the centre bearing bracket into the lower door. Make sure that the catch mechanism is pointing to the rear. *Fig. 35 (3)*
▶ Insert the plugs again on the other side of the door. *Fig. 35 (4)*

4.3.12 Fitting the upper door

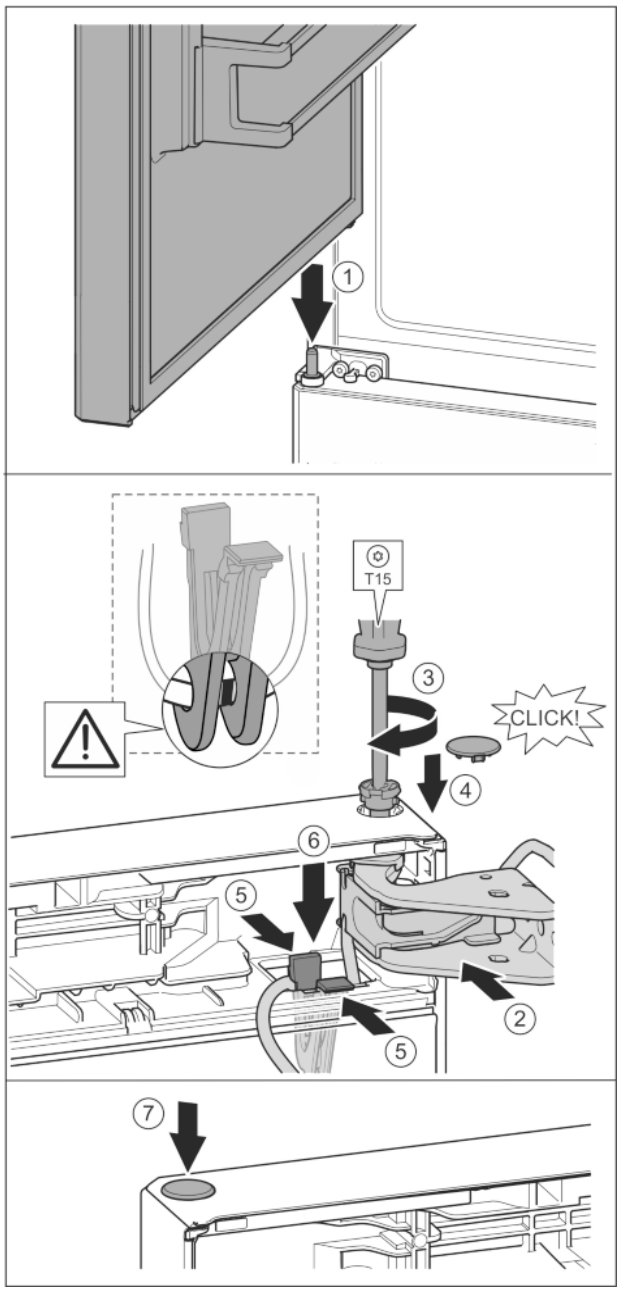

Fig. 36

▶ Place the upper door on the centre bearing pins *Fig. 36 (1)*
▶ Align the top of the door with opening in the bearing bracket. *Fig. 36 (2)*
▶ Insert the bolt and tighten with a T15 screwdriver. *Fig. 36 (3)*
▶ Fit the protective cover to protect the door: Insert the protective cover and check that it is attached to the door. If not, insert the bolt fully. *Fig. 36 (4)*

NOTICE
Cable crushing
▶ The mark on the cable must be centred in the holder. The tab with the longer opening must point forwards.

▶ Insert the holder with its cable into the opening. *Fig. 36 (5)*
▶ Press the holder downwards until the tab clicks into place. *Fig. 36 (6)*
▶ Insert the plugs. *Fig. 36 (7)*

4.3.13 Fitting the cable connection

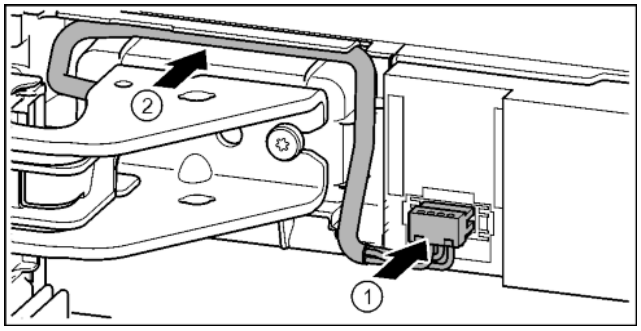

Fig. 37

▶ Engage the plug above the upper bearing bracket and carefully place the cable strands into the channel. *Fig. 37 (1)*
▶ Carefully position the grey cable in the guide above the top bearing bracket. *Fig. 37 (2)*

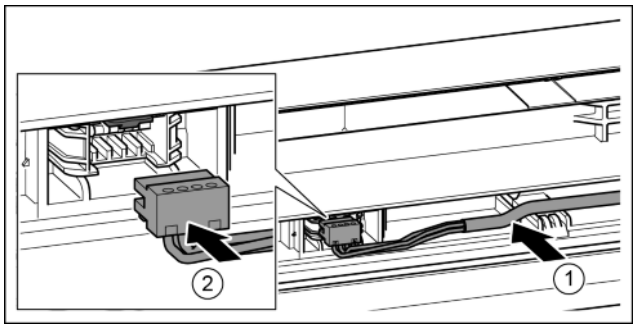

Fig. 38

▶ Insert the grey cable into the guide in the top door. *Fig. 38 (1)*
▶ Engage the plug. *Fig. 38 (2)*
▶ Position the remaining cable length as a loop in the guide, if required.

4.3.14 Aligning the doors

WARNING
Risk of injury due to the door dropping out!
If the bearing parts are not screwed into place firmly enough, the door may drop out. This may lead to severe injuries. What is more, the door may not close and therefore the appliance may fail to cool properly.
▶ Screw the turn hinges firmly into place with 4 Nm.
▶ Check all of the screws and retighten if necessary.

▶ Align the doors flush with the appliance housing using the two oblong holes in the lower bearing bracket and centre bearing bracket if needed. To do this undo the middle screw in the bottom bearing bracket with the T25 tool supplied. Undo the remaining screws a little with the T25 tool or with a T25 screwdriver and align using the slotted holes. Undo the screws in the middle bearing bracket with the T25 tool and align the middle bearing bracket using the slotted holes.
▶ Support the door: Take off the adjustable foot on the bearing bracket using the open-ended wrench SW10 until it comes into contact with the floor, then turn an additional 90°.

4.3.15 Fit the bottom soft stop mechanism

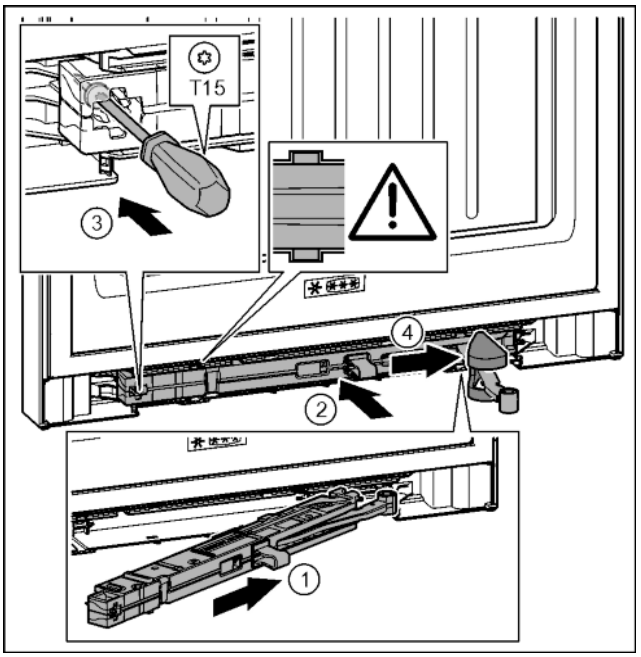

Fig. 39

▶ Slide the soft stop mechanism on the bearing bracket side at an angle into the slot as far as the limit stop. *Fig. 39 (1)*
▶ Slide the soft stop mechanism fully into the slot. *Fig. 39 (2)*
▷ The unit is positioned correctly when the rib on the soft stop mechanism is in the guide.
▶ Tighten the screw with the T15 screwdriver. *Fig. 39 (3)*
▶ Push the cover over the hinge. *Fig. 39 (4)*

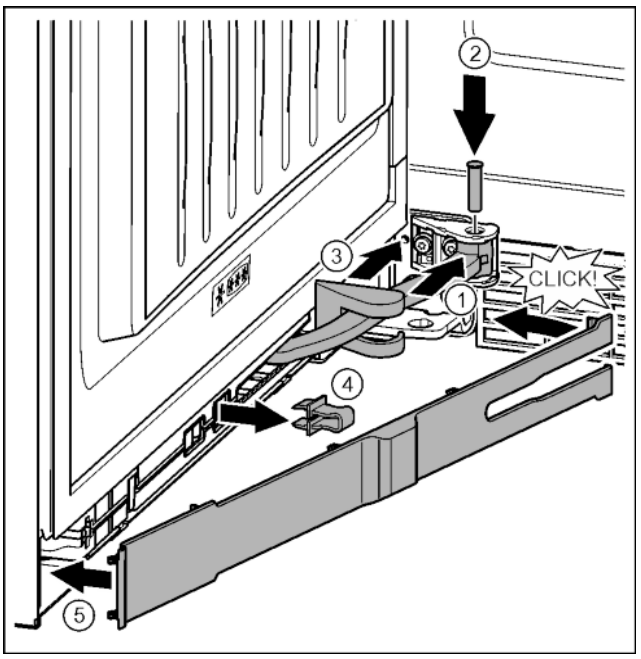

Fig. 40

The door is open 90°
▶ Turn the hinge in the mount. *Fig. 40 (1)*
▶ Insert the bolt with a T15 screwdriver in the mount and hinge. Make sure that the catch mechanism is sitting correctly in the groove. *Fig. 40 (2)*
▶ Push the bearing bracket cover along the hinge and fit on the mount. *Fig. 40 (3)*
▶ Remove the locking device. *Fig. 40 (4)*
▶ Position the panel on the handle side and swing it in. *Fig. 40 (5)*
▷ The panel is clicked into place.
▶ Close the bottom door.

4.3.16 Fit the top soft stop mechanism

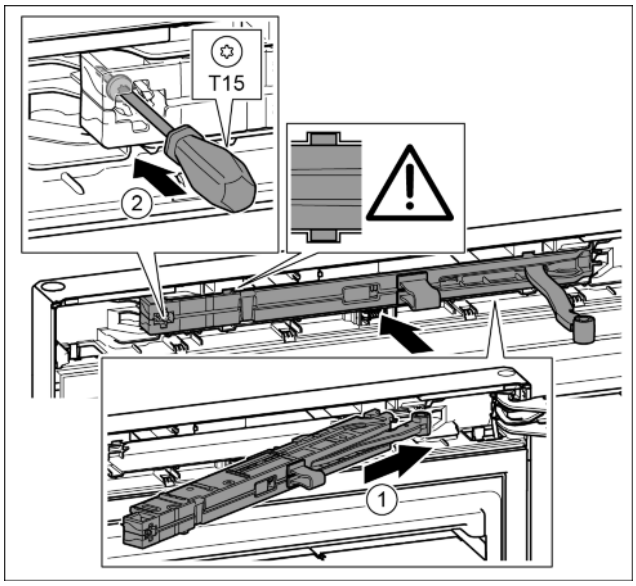

Fig. 41

- ▶ Slide the soft stop mechanism on the bearing bracket side at an angle into the slot as far as the limit stop. *Fig. 41 (1)*
- ▶ Slide the unit in fully.
- ▷ The unit is positioned correctly when the rib on the soft stop mechanism is in the guide in the housing.
- ▶ Tighten the screw with the T15 screwdriver. *Fig. 41 (2)*

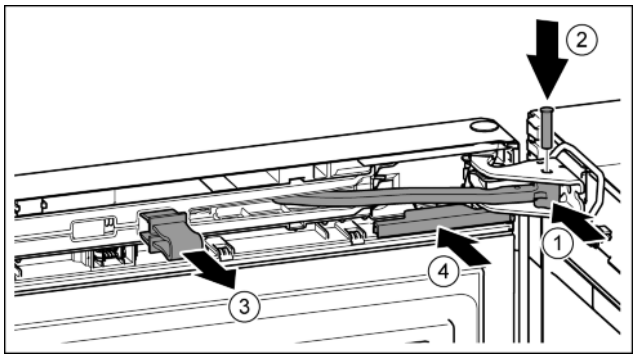

Fig. 42

The door is open 90°.

- ▶ Turn the hinge in the bearing bracket. *Fig. 42 (1)*
- ▶ Insert the bolt in the bearing bracket and hinge. Make sure that the catch mechanism is sitting correctly in the groove. *Fig. 42 (2)*
- ▶ Remove the locking device. *Fig. 42 (3)*
- ▶ Slide on the cover. *Fig. 42 (4)*

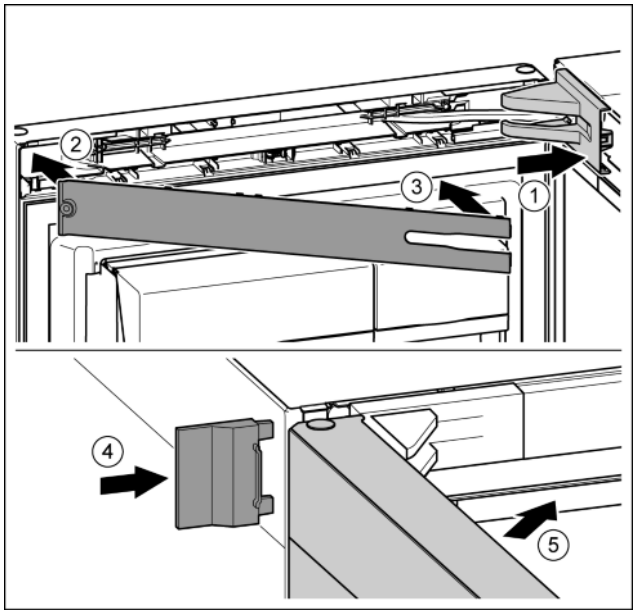

Fig. 43

- ▶ Position the bearing bracket and engage. If necessary push apart carefully. *Fig. 43 (1)*
- ▶ Position the panel. *Fig. 43 (2)*
- ▶ Swing in the panel and click into place. *Fig. 43 (3)*
- ▶ Slide on the external cover. *Fig. 43 (4)*
- ▶ Close the upper door. *Fig. 43 (5)*

4.4 Water connection

WARNING

Electricity in combination with water!
Electric shock.

- ▶ Before connecting to the water pipe: Disconnect the appliance from the mains.
- ▶ Before connecting to water supply lines: Shut off the water supply.
- ▶ The connection to the drinking water mains may only be carried out by a qualified gas and water engineer.

WARNING

Risk of poisoning!

- ▶ The water quality has to comply with the drinking water ordinance of the respective country (e.g. 98/8
- ▶ Connect to the drinking water supply only.
- ▶ The IceMaker serves exclusively for making ice cubes in household quantities and has to be operated with water suitable for the purpose.

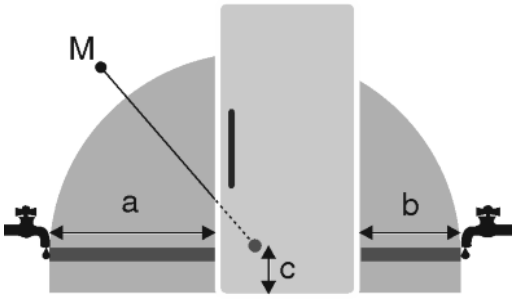

Fig. 44

a	b	c	M
~ 1100 mm	~ 700 mm	~ 110 mm	Solenoid valve

- The water pressure must be between 0.15 MPa and 0.6 MPa (1.5 bar - 6 bar).
- The water must be connected to the appliance via a cold water pipe that can withstand the operating pressure and complies with hygiene standards.
  Use the stainless steel hose supplied (length 1.5 m). Do not reuse old hoses. A 3 m hose is available as an optional extra. This must be professionally installed.
  A filter with a seal is located in the hose connector.
- A stopcock must be provided between the hose line and the domestic water connection to cut off the water supply if necessary.
- The stopcock must be located outside the back of the appliance and be within easy reach so that the appliance can be inserted as deeply as possible and the stopcock can be turned off quickly. Stick to the clearances.
- All devices and equipment used to supply water must comply with the regulations in force in the respective country.
- Do not damage or kink the water supply line during installation.

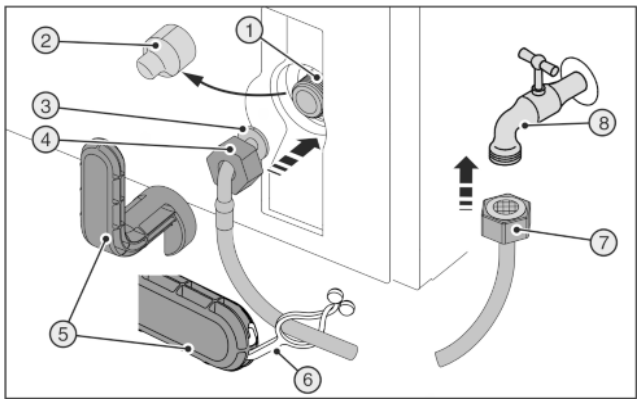

Fig. 45

The solenoid valve is located at the bottom on the back of the appliance. It has a R3/4 connecting thread.

For specialist staff:

Connecting the stainless steel hose: The back of the appliance must be accessible.

WARNING
Broken auxiliary tool *Fig. 45 (5)*.
Cuts.
▶ Only use an auxiliary tool *Fig. 45 (5)* at room temperature.

Connecting the hose to the appliance:
▶ Remove the cover *Fig. 45 (2)*.
▶ Easy to fit: Place the straight end of the hose *Fig. 45 (7)* to the left on the floor.
▶ Slide the nut *Fig. 45 (4)* over the angled end of the hose *Fig. 45 (3)* up to the end and secure.

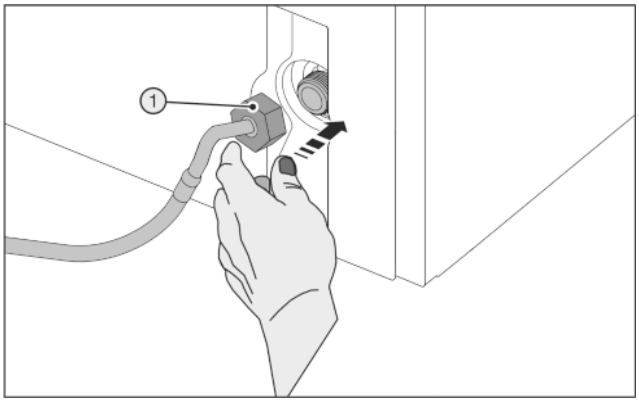

Fig. 46

NOTICE
Damaged solenoid thread pitch.
The solenoid leaks: Water may leak out.
▶ Position the nut *Fig. 46 (1)* carefully and screw it directly onto the thread with two fingers until it is seated securely.

▶ Tighten the nut *Fig. 46 (1)*clockwise with the auxiliary tool *Fig. 45 (5)* until maximum torque is reached and the auxiliary tool *Fig. 45 (5)* overtightens.

Connecting the hose to the stopcock:
▶ Screw the nut *Fig. 45 (7)* onto the stopcock *Fig. 45 (8)*.
▶ Tighten the nut *Fig. 45 (7)*clockwise with the auxiliary tool *Fig. 45 (5)* until maximum torque is reached and the auxiliary tool *Fig. 45 (5)* overtightens.
▶ Turn the water supply stopcock *Fig. 45 (8)* on and check the whole water system for leaks.
▶ Flushing the IceMaker: **Turning the IceMaker on chapter** (see 5.4.10.2 Switch the IceMaker on.) .
▶ Hook the clip *Fig. 45 (6)* into the auxiliary tool *Fig. 45 (5)* and fix it to the stainless steel pipe to store it.

4.5 Sliding into the row of units

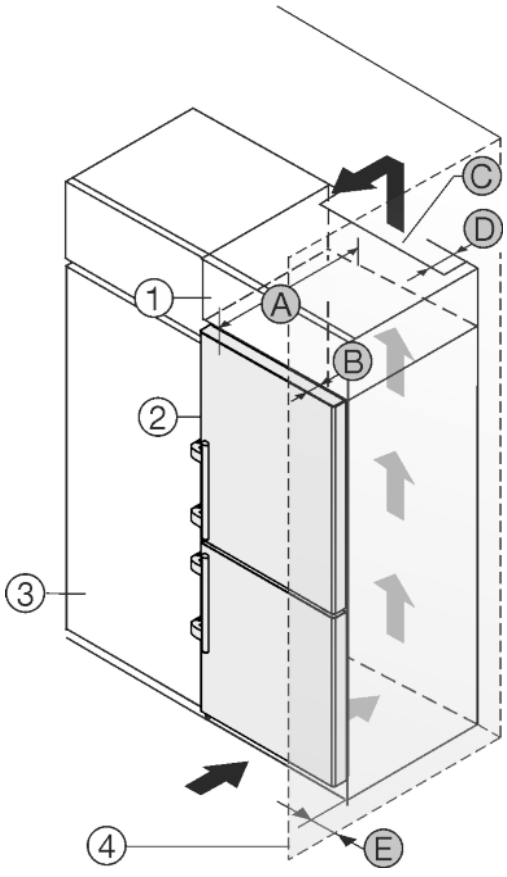

Fig. 47

A [mm]	B [mm]	C [cm²]	D [mm]	E [mm]
665 x	65	min. 300	min. 50	min. 46

x If using wall spacers, add 15 mm (see 4.2 Installing the appliance) .

These dimensions apply to an opening angle of 90 °. Clearances vary depending on the opening angle.

Please contact Customer Services to purchase a kit to limit the door opening angle to 90° for appliances with soft-closing devices.

The appliance can be built into kitchen units. A top cupboard *Fig. 47 (2)* can be added above the appliance in order to bring the appliance *Fig. 47 (1)* up to the height of the fitted kitchen units.

The appliance can be installed right next to the kitchen cabinet *Fig. 47 (3)*. The appliance must protrude by depth *Fig. 47 (B)* from the front of the cabinet so that the doors can be opened fully. The appliance may protrude further depending on the depth of the kitchen cabinets and whether wall spacers are used.

NOTICE
Danger of overheating due to insufficient air ventilation!
The compressor may be damaged if there is insufficient air ventilation.
▶ Take care to ensure adequate air ventilation.
▶ Observe the ventilation requirements.

Ventilation requirements:

- There are spacer fins at the back of the appliance to provide adequate ventilation. Make sure these do not end up in recesses or openings.
- At the back of the top cabinet, there must be an air outlet shaft with depth *Fig. 47 (D)*, spanning the entire width.
- The ventilation shaft *Fig. 47 (C)* must be observed under the ceiling.
- The wider the ventilation clearance, the more efficiently the appliance will run.

If the appliance is installed with the hinges next to a wall *Fig. 47 (4)*, the distance *Fig. 47 (E)* between the appliance and the wall must be observed. This is how far the handle protrudes when the door is open.

4.6 Disposing of packaging

WARNING
Danger of suffocation due to packing material and plastic film!
▶ Do not allow children to play with packing material.

The packaging is made of recyclable materials:

- corrugated board/cardboard
- expanded polystyrene parts
- polythene bags and sheets
- polypropylene straps
- nailed wooden frame with polyethylene panel*

▶ Take the packaging material to an official collecting point.

4.7 Connecting the appliance

WARNING
Failure to connect properly
Fire hazard.
▶ Do not use an extension cable.
▶ Do not use distributor blocks.

NOTICE
Failure to connect properly
Damage to the electronics.
▶ Do not use a standalone inverter.
▶ Do not use an energy saving plug.

Note
Only use the power connection lead supplied.
▶ A longer power connection lead can be ordered from Customer Service.

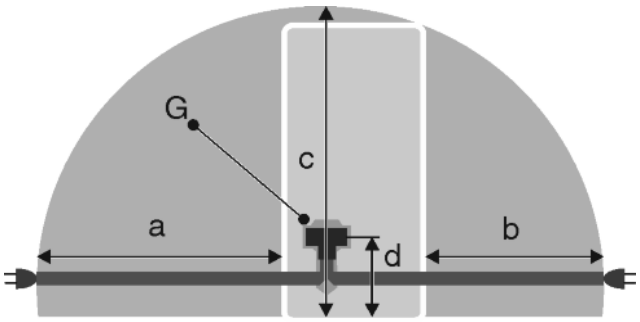

Fig. 48

a	b	c	d	G
~ 1800 mm	~ 1400 mm	~ 2100 mm	~ 200 mm	Appliance plugs

Ensure that the following conditions are met:

- The type of current and voltage at the installation site correspond to the information on the model plate (see 1 Appliance at a glance) .
- The socket is earthed according to the regulations and fused.
- The fuse tripping current is between 10 and 16 A.
- The socket is easily accessible.
- The socket is outside the back of the appliance area in the specified area *Fig. 48 (a, b, c)*.

▶ Check the electrical connection.
▶ Insert the appliance plug *Fig. 48 (G)* into the back of the appliance. Ensure that it clicks into place.
▶ Connect the power plug to the power supply.
▷ The Liebherr logo appears on the screen.
▷ The display switches to the standby symbol.

4.8 Switching on the appliance

Note
If the appliance is in demo mode, DEMO appears on the homescreen.
▶ Disable demo mode (see 7 Malfunctions) .

Note
The manufacturer recommends:
▶ Store frozen produce at -18 °C or colder.

Connect and switch on appliance approx. 10 hours before loading it for the first time.

4.8.1 Switch on appliance

If the standby symbol is displayed over the whole screen:
▶ Press the standby symbol.
▷ The appliance is switched on. The display switches to the home screen.
▷ The appliance is set to the displayed temperatures. This is shown by down arrows.

If the Standby symbol appears in the wine cooler or freezer field:
▶ Press the Standby symbol in the wine cooler or freezer field.

* Depending on model and options

▷ The appliance is switched on.
▷ The appliance is set to the displayed temperatures. This is shown by down arrows.

If the screen is black:
▶ Touch the screen.
▷ The standby symbol appears on the whole screen.
▶ Press the standby symbol.
▷ The appliance is switched on. The display switches to the home screen.
▷ The appliance is set to the displayed temperatures. This is shown by down arrows.

4.8.2 Switch on the wine cooling compartment.

The standby symbol is displayed in the wine cooling field.
▶ Press the standby symbol in the wine cooling field.
▷ The wine cooling zone is switched on
▷ The wine cooling compartment is set to the temperatures displayed. This is shown by down arrows.

4.9 SmartDevice box

SmartDevice box: Start-up instructionswww.smartdevice.liebherr.com/install



If the **SmartDevice box** (SDB) is inserted correctly the menu below appears. The device is supplied with WLAN activated.
To use more WiFi options, open the WIFI menu.

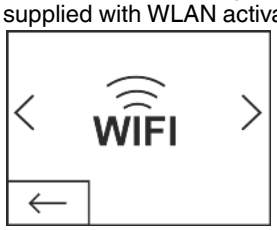

Fig. 49

▶ Press **WIFI**.
▷ The **WIFI** menu opens.

Turning on/off WiFi

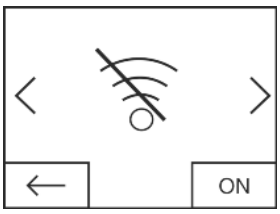

Fig. 50

▶ Use the slider at the bottom right to turn on/off **WIFI**
▷ Slider to OFF = **WIFI**is disabled.
▷ Slider to ON = **WIFI**is enabled.

WIFI INFO
Call up the status of the **SmartDevice box**.

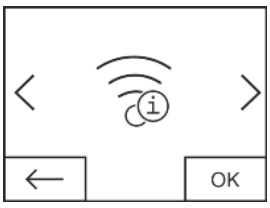

Fig. 51

▶ Press the **OK** button.
▷ The **WIFI INFO** screen opens.
▷ The following statuses can be displayed:

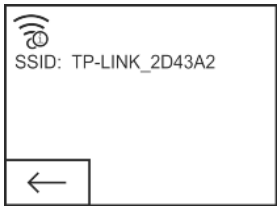

Fig. 52

▷ SSID: ***WPS*** = The **SmartDevice box** is in **WPS mode** for 3 minutes. An automatic connection to the **SmartDevice box** can be established via the router.
▷ SSID: LHSDB_xxxxxxxxx = the **SmartDevice box** is in **manual connection mode** for 30 minutes. The **SmartDevice box** transmits a private network to which you can connect to send WLAN data.
▷ SSID: empty = The **SmartDevice box** is in **sleep mode**. Please reset the **WIFI** and connect your **SmartDevice box** to the home network.
▷ SSID: TP-LINK_2D43A2 or Fritz!Box7069 = The **SmartDevice box** is connected to the home network.

WIFI RESET
Resetting the **SmartDevice box** to the default settings.

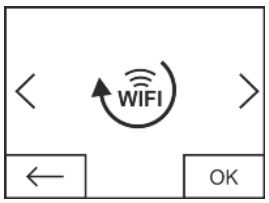

Fig. 53

▶ Confirm with **OK**.
▷ The **SmartDevice box** is reset to the default settings.

Showing the WiFi status on the Home screen

Status: WiFi on & connected

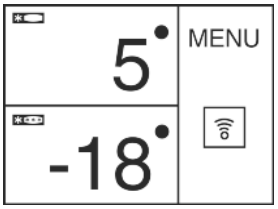

Fig. 54

▶ The **WiFi indicator** is white.
▷ WiFi is on.
▷ The home network and the Liebherr server are connected.

Status: WiFi on & connecting
▶ The **WiFi display** shows a clock.

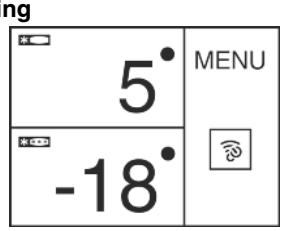

Fig. 55

▷ WiFi is on.
▷ There is no connection to the home network and/or the Liebherr server.

Status: WiFi on & disconnected
▶ The **WiFi display** shows a warning sign.

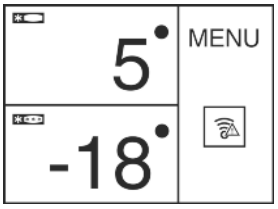

Fig. 56

▷ WiFi is on.
▷ The **SmartDevice box** is either not connected to a network or the **SmartDevice box** is connected to a network but the network cannot be found, e.g. switched off at night.

4.10 Inserting the FreshAir filter.

The supplied FreshAir filter can be used for optimum air quality.

The intake is located at the top of the appliance, (see 1 Appliance at a glance)

▶ Remove cover.

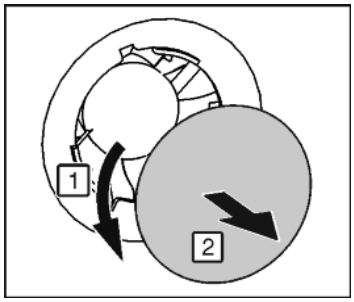

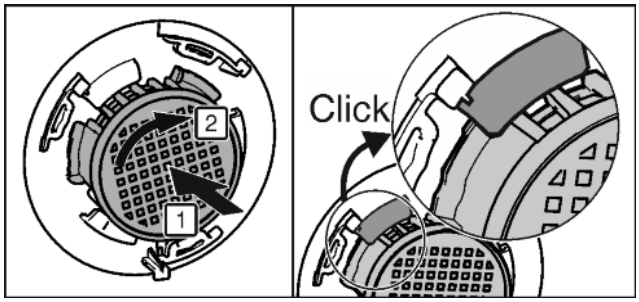

Fig. 57

▶ FreshAir-Insert the filter in the cover and turn it clockwise.
▶ Ensure that the filter clicks into place.
▶ Replace the cover again.

Setting the timer

▶ Press menu.
▶ Press the navigation arrows until the FreshAir filter is displayed.
▶ Press the FreshAir filter symbol.
▶ Press ON.
▷ The timer is set. After the interval has expired a message prompts you to change the FreshAir filter.

4.11 Setting the clean ventilation grid timer

The ventilation grid must be cleaned at least once a year for sufficient ventilation. The timer can be set as a reminder.

▶ Press menu.
▶ Press the navigation arrows until the ventilation grid is displayed.
▶ Press the ventilation grid symbol.
▶ Press ON.
▷ The timer is set. After the interval has expired a message prompts you to clean the ventilation grid.

5 Control

5.1 Changing the temperature unit

The temperature display can be switched from °C to °F.

▶ Press menu.
▶ Press the navigation arrow until °C is displayed.
▶ Press °F.
▷ The temperature is displayed in °F.

°F

Switch from °F to °C in the same way.

5.2 Child proofing

The child-proofing function enables you to make sure that the appliance is not inadvertently switched off by playing children.

5.2.1 Switching on the child safety device

▶ Press menu.
▶ Press the navigation arrows until the child safety device is displayed.
▶ Press ON.
▷ The child safety device is switched on.

5.2.2 Switching the child safety device off

▶ Press menu.
▶ Press the navigation arrows until the child safety device is displayed.
▶ Press OFF.
▷ The child safety device is switched off.

5.3 SabbathMode

This function meets the religious requirements on the Sabbath or Jewish festivals. Turn on SabbathMode to switch off certain controls. After setting up SabbathMode, you no longer need to worry about indicator lights, figures, symbols, displays, alarms or fans. The thawing cycle only works for the specified time without taking account of fridge use. After a power cut the appliance automatically returns to SabbathMode.

There is a list of Star-K certified appliances at www.star-k.org/appliances.

WARNING
Danger of food poisoning.
If there is a power cut while the appliance is in SabbathMode, this message is not saved. Once power is restored, the appliance continues in SabbathMode. When this mode is over no message about the power cut is displayed on the temperature display.
If there was a power cut during SabbathMode:

▶ Check the food for quality. Do not eat the food if it has thawed.

- All functions are locked until SabbathMode is switched off.
- If functions such as SuperFrost, SuperCool, Ventilation, etc. are activated when SabbathMode is on, they remain active.
- The IceMaker does not work.
- No audible signals are emitted and the temperature display does not indicate any warnings or settings (such as a temperature alarm or door alarm).
- The internal light is off.

5.3.1 Switching SabbathMode on.

▶ Press menu.
▶ Press the navigation arrow until SabbathMode is displayed.
▶ Press ON.
▷ SabbathMode is switched on. Only the SabbathMode symbol appears on the screen.

SabbathMode switches off automatically after 120 hours if it has not already been switched off manually. The display switches to the home screen.

5.3.2 Switch off the SabbathMode

▶ Touch the screen.
▶ Press OFF.
▷ SabbathMode is switched off.

5.4 Freezer compartment

You can store frozen food, make ice cubes and freeze fresh food in the freezer compartment.

5.4.1 Freezing food

The rating plate indicates the maximum quantity of fresh food you can freeze within 24 hours (see 1 Appliance at a glance) under “Freezing capacity ... kg/24h”.

Each drawer can hold a max. of 25 kg of frozen food.

The shelves can each be loaded with 35 kg of frozen food.

Closing the door creates a vacuum. After closing, wait for around 1 minute, then the door will be easier to open.

CAUTION

Risk of injury due to broken glass!

Bottles and cans containing drinks may burst when being frozen. This applies particularly to sparkling drinks.

▶ Do not freeze bottles and cans containing drinks!

So that the food is rapidly frozen through to the core, do not exceed the following quantities per pack

- Fruit, vegetables up to 1 kg
- Meat up to 2.5 kg

▶ Pack the food in portions in freezer bags, reusable plastic, metal or aluminium containers

5.4.2 Storage life

Standard values for the storage life of various types of food in the freezer compartment:	
Ice-cream	2 to 6 months
Sausage, ham	2 to 6 months
Bread, bakery products	2 to 6 months
Game, pork	6 to 10 months
Fatty fish	2 to 6 months
Lean fish	6 to 12 months
Cheese	2 to 6 months
Poultry, beef	6 to 12 months
Vegetables, fruit	6 to 12 months

The values indicated for storage life are standard ones.

5.4.3 Thawing food

- in the refrigerator compartment
- in a microwave oven
- in a conventional or fan oven
- at room temperature

▶ Remove only as much food as is required. Use thawed food as quickly as possible.

▶ Food once thawed should be re-frozen only in exceptional cases.

5.4.4 Setting the temperature

The temperature depends on the following factors:

- the amount of times the door is opened
- how long the door is open for
- the room temperature of the installation site
- the type, temperature and amount of food

The temperature can be set from -26 °C to -16 °C.

Recommended temperature setting: -18 °C

▶ Press the freezer compartment field.

▷ The following screen is displayed:

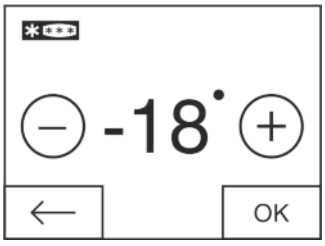

Fig. 58

Setting a higher temperature:

▶ Press plus.

Setting a lower temperature:

▶ Press minus.

The minus symbol is greyed out when the coldest temperature is selected.

The plus symbol is greyed out if it is pressed again after selecting the hottest temperature. The standby symbol is displayed on the screen.

▶ Confirm the required temperature with OK.

▷ The display switches to the home screen.

▷ The selected temperature is displayed.

▷ Up or down arrows indicate the change in temperature. The arrows are greyed out when the target temperature is reached.

5.4.5 SuperFrost

With this function you can freeze fresh food quickly through to the core. The appliance operates with maximum refrigeration. The noise of the refrigeration unit may be temporarily louder as a result.

You can freeze as many kilograms of fresh food within 24 hrs as is indicated on the type plate under “Freezing capacity ... kg/24hrs”. This maximum freezing quantity can vary depending on model and climate class.

You have to activate SuperFrost in good time, depending on how much fresh food is to be frozen: about 6 hours before placing the food inside in case of small amounts and about 24 hours in advance in case of the maximum amount of food to be frozen.

Wrap produce and spread it out as far as possible. Do not allow produce to be frozen to touch produce that is already frozen to prevent the latter thawing.

You do not have to activate SuperFrost in the following cases:

- when placing frozen food in the freezer
- when freezing up to approx. 1 kg fresh food daily

Switching SuperFrost on.

▶ Press menu.

▶ Press the navigation arrow until SuperFrost is displayed.

▶ Press ON.

▷ SuperFrost is switched on.

▷ The freezer temperature goes down and the appliance works at maximum cooling capacity.

If there is a small amount of frozen food:

▶ wait about 6 hours.

▶ Place packaged food in the top drawers.

With the maximum amount of frozen food (see model plate):

▶ wait about 24 hours.

▶ Remove top drawers and place food directly on the upper shelves.

▷ SuperFrost switches itself off automatically after about 65 hours.

▷ The SuperFrost symbol is greyed out.

▶ Put the food in the drawers and close them again.

▷ The appliance works in normal mode again.

Switching off SuperFrost

▶ Press menu.
▶ Press the navigation arrow until SuperFrost is displayed.
▶ Press OFF.
▷ SuperFrost is switched off.

5.4.6 Drawers

Note
The energy consumption increases and the cooling performance reduces if the air ventilation is insufficient.
▶ Ensure that the air slits of the fan on the rear wall are always kept free!

▶ To store frozen food directly on the shelves pull the drawer forward and lift it out.

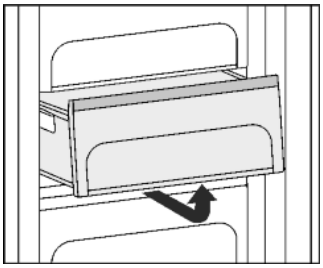

5.4.7 Shelves

Moving shelves

▶ To remove the shelf: lift up at the front and pull out.
▶ To put the shelf back: simply push in as far as it will go.

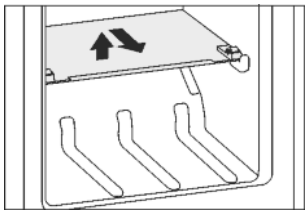

Removing shelves

▶ The shelves may be removed for cleaning.

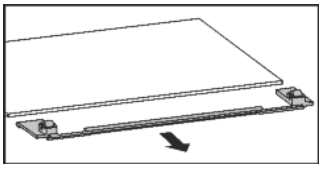

5.4.8 VarioSpace

You can remove the shelves and drawers. This leaves more room for larger food items such as poultry, meat, large game and tall baked goods, which can be frozen whole before further preparation.

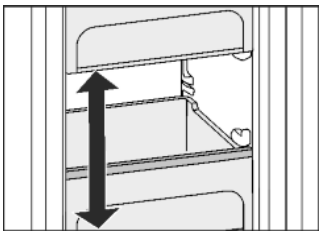

▶ Each drawer can hold max. 25 kg of frozen food.
▶ The shelves can each be loaded with 35 kg of frozen food.

5.4.9 Freezer pack

Freezer packs prevent the temperature rising too quickly should there be a power cut.

Using freezer packs

▶ Put the fully frozen freezer packs on the frozen food in the top front section of the freezer compartment.

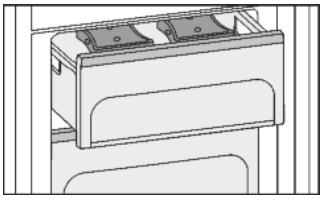

5.4.10 IceMaker

The IceMaker is located in the top drawer of the freezer on the left-hand side.

Make certain that the following conditions are met:

- The appliance is level.
- The appliance is connected.
- The freezer compartment is switched on.
- The IceMaker is connected to the water supply.

Producing ice cubes

The production capacity depends on the freezer temperature. The lower the temperature, the more ice cubes can be produced in a specific period.

The ice cubes drop from the IceMaker into the drawer. When a certain filling level has been reached, no further ice cubes are produced. The IceMaker does not fill the drawer right up to the brim.

Distribute the ice cubes evenly in the drawer to increase the capacity.

If large quantities of ice cubes are needed, the complete IceMaker drawer can be exchanged for the adjacent drawer. When the drawer is closed, the IceMaker automatically recommences production.

Once the IceMaker has been switched on for the first time, it may take up to 24 hours until the first ice cubes are produced.

Note
When the appliance is used for the first time and if it has been out of use for a long time, particles may collect in the IceMaker and/or water conduit.
▶ Do not use or consume ice cubes that have been made 24 hours after the first ice cubes are made.

Switch the IceMaker on.

▶ Press Menu.
▶ Press the navigation arrows until the IceMaker is displayed.
▶ Press the IceMaker symbol.
▶ Press ON.
▷ The IceMaker is switched on.

Note
▶ The IceMaker only makes ice cubes when the drawer is completely closed.

Flushing

Flushing function to rinse out the water pipe when used for the first time.

Note
The water pipe can only be rinsed out if the temperature is above 0 °C.
▶ Only use the Flushing option if the temperatures in the appliance are above 0 °C.

NOTICE
Blocked IceMaker and water outlet.
Risk of damage to the IceMaker and the drawer outlet.
▶ Put containers with a maximum height of 12 cm in the drawer under the IceMaker.

Ensure that the IceMaker drawer is empty.
▶ Do not place containers taller than 12 cm in the drawer under the IceMaker.
▶ Press Menu.
▶ Press the navigation arrows until the IceMaker is displayed.
▶ Press the IceMaker symbol.

▶ Press the navigation arrows until flushing is displayed.



▶ Press ON.
▷ Water pipes are rinsed and at the same time the ice cube tray is turned back to the cleaning position.



▶ Do not operate the screen during this procedure.
Flushing function terminated: The symbol appears.
▶ Press OK.



▶ Remove the drawer and the container.
▶ Clean the drawer and, if necessary, remove excess water from the drawer.

IceMaker holiday function

The IceMaker holiday function is suitable for short phases when no ice cubes are to be made, for example, when you are on holiday.

Switching the IceMaker holiday function on.

The IceMaker drawer must be emptied and pushed in.
▶ Press menu.
▶ Press the navigation arrows until the IceMaker is displayed.



▶ Press the IceMaker symbol.
▶ Press the navigation arrows until the IceMaker holiday function is displayed.



▶ Press ON.
▷ The ice cube tray moves to the cleaning position. The IceMaker switches to holiday function.



▷ The IceMaker holiday function symbol appears in the menu area.
▶ Remove the drawer.
▶ Clean the ice cube tray and drawer with a soft cleaning cloth and warm water. If necessary use a mild detergent. Then rinse out.
▶ Push the drawer in.

Switching the IceMaker holiday function off

NOTICE
Sickness caused by dirty ice compartment.
▶ After the IceMaker has been switched off for a long time, clean the ice cube tray.

NOTICE
Rinse agent residue in the ice compartment and drawer.
Nausea or irritation of the mucous membrane.
▶ Remove rinse agent residue: Discard the first three batches of ice cubes.

▶ Remove the drawer.
▶ Clean the ice cube tray and drawer with a soft cleaning cloth and warm water. If necessary use a mild detergent. Then rinse out.
▶ Push the drawer in.
▶ Press Menu.
▶ Press the navigation arrows until the IceMaker is displayed.



▶ Press the IceMaker symbol.
▶ Press OFF.
▷ The ice cube tray moves to the operating position. The IceMaker switches on.
▷ The IceMaker symbol appears in the menu field instead of the IceMaker holiday function symbol.

Switching off the IceMaker

If no ice cubes are required, the IceMaker can be switched off independently of the freezer compartment.

When the IceMaker is switched off, the drawer of the IceMaker can also be used for freezing and storing food.
▶ Cleaning the IceMaker (see 6.5 Cleaning the IceMaker) .
▶ Press Menu.
▶ Press the navigation arrows until the IceMaker is displayed.



▶ Press the IceMaker symbol.
▶ Press OFF.
▷ The IceMaker is switched off.
▶ If necessary, food can now be frozen in the drawer up to a maximum height of 12 cm.

5.5 Wine zone

You can bring your wines to the ideal drinking temperature slowly and gradually in the wine zone.

5.5.1 Storing wine bottles

48 Bordeaux bottles (0,75 l) can be stored in the wine zone.
▶ Store white wine only in one compartment and red wine only in the other, since both compartments can be set to independent temperatures.
▶ If possible, lay bottles of the same type of wine side by side on the same grid shelf.
▶ Rearrange bottles as seldom as possible.
▶ Stored open bottles on the folded down wooden grid shelf.*
▶ To fold down the wooden grid shelf: press the lock under the trim sideways.*
▷ The wooden grid shelf folds down.*

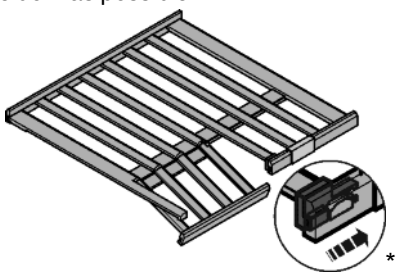

*

5.5.2 Setting the temperature of the wine cooler

The appliance is set up for regular use by default. You can set the temperature from 20 °C to 5 °C, we recommend 8 °C to 12 °C.

The wine cooler is divided into two compartments which you can set at different temperatures.
▶ Press the wine cooler field.
▷ The following screen is displayed:

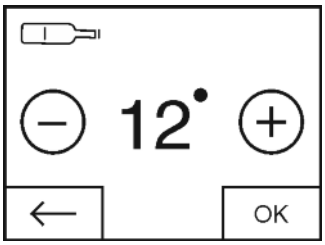

Fig. 59

Setting a higher temperature:
▶ Press plus.

Setting a lower temperature:
▶ Press minus.

The minus symbol is greyed out when the coldest temperature is selected.

The plus symbol is greyed out if it is pressed again after selecting the hottest temperature. The standby symbol is displayed on the screen.
▶ Confirm the required temperature with OK.
▷ The display switches to the home screen.
▷ The selected temperature is displayed.
▷ Up or down arrows indicate the change in temperature. The arrows are greyed out when the target temperature is reached.

5.5.3 Fan

When the fan runs, the relative humidity in the interior increases so that the cork does not dry out.

When the fan is activated, the energy consumption increases. To save energy, the fan switches off automatically when the door is open.

Switching on the fan

▶ Press menu.
▶ Press the navigation arrows until the fan is displayed.
▶ Press ON.
▷ The fan is switched on.

To switch off the fan

▶ Press menu.
▶ Press the navigation arrows until the fan is displayed.
▶ Press OFF.
▷ The fan is switched off.

If the compressor is running, the ventilator runs even if it is switched off. It switches off automatically a few minutes after the compressor runtime.

5.5.4 Dim mode

For glazed door models you can set the dim mode of the light, i.e. the intensity with which the light is to shine after the door has closed.

Setting Dim mode

Note
▶ With Dim mode on, the light dims out slowly when you close the door.

There are 5 settings for the intensity of the light after the door is closed. Settings range from having no light on in the wine cooler, to minimum light intensity (1) up to maximum light intensity (4).
▶ Press menu.
▶ Press the navigation arrow until Dim mode appears.
▶ Press the Dim Mode symbol.
▶ Press plus or minus.
▷ The light intensity is shown in preview.

After selecting the lowest level, press the minus symbol again. The button becomes inactive. The standby symbol is displayed on the screen.

The plus symbol is greyed out when the highest level is selected.
▶ Press OK to confirm your settings.
▷ The display switches to the home screen.
▷ The light intensity after closing the door is set.

5.5.5 Labelling clip

You can write which wines are stored in the respective compartments on the label clip. You can obtain additional labelling clips from your dealer.

Using labelling clips.

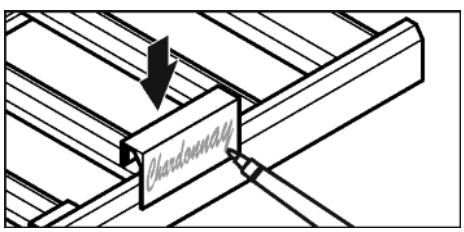

Fig. 60

Note
Do not use water-resistant permanent markers.
▶ Label with a water-soluble film pen (non-permanent).

5.5.6 Wooden shelf

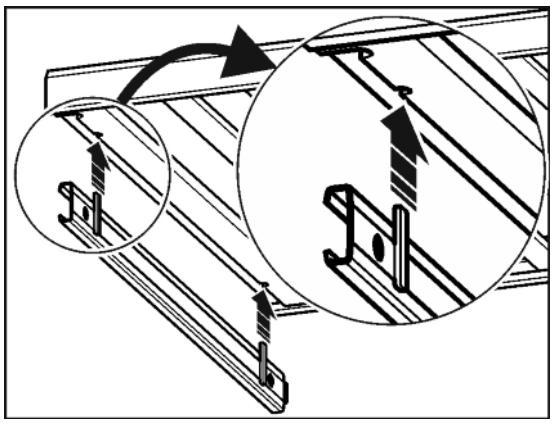
Fig. 61

To remove the wooden shelf:
▶ Pull the wooden shelf forward.
▶ Lift the wooden shelf.

To insert the wooden shelf:
▶ Place the wooden shelf on the rails.

6 Maintenance

6.1 Change the FreshAir filter.

The FreshAir filter guarantees optimum air quality. It should be changed every 12 months. When the timer is set a message on the display prompts you to change it. The FreshAir filter can be ordered from the specialist dealer.
Change FreshAir filter is displayed.
▶ Press the change FreshAir filter symbol
▷ The display switches to the home screen.

The message can be displayed again by pressing on the menu field until the filter has been changed and confirmed. (see 8 Messages) .

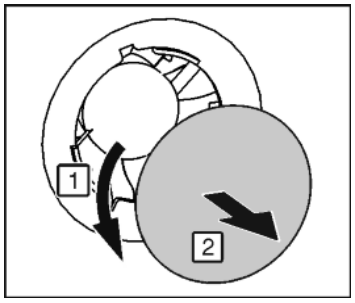

Fig. 62

▶ Remove cover.

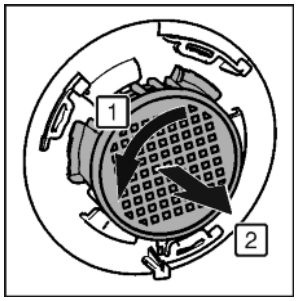

Fig. 63

▶ Remove the FreshAir filter.
▶ Insert the new filter in the reverse order.
▶ Ensure that the filter clicks into place.
▶ Replace the cover again.

Confirming the filter change

▶ Press menu.
▶ Press the navigation arrows until the FreshAir filter is displayed.



▶ Press the FreshAir filter symbol.
▶ Press the navigation arrows until change FreshAir filter is displayed.



▶ Press RESET.
▷ The timer is reset. The change interval starts all over again.



Turning the timer off

If a new FreshAir filter is not inserted the timer can be turned off

▶ Press menu.
▶ Press the navigation arrows until the FreshAir filter is displayed.



▶ Press the FreshAir filter symbol.
▶ Press OFF.
▷ The timer is turned off.

6.2 Defrosting with NoFrost

The NoFrost system automatically defrosts the appliance.

Wine zone:

The defrosted water is evaporated by the heat of the compressor. Water drops or a thin layer of frost or ice can form on the back wall; this is a completely normal part of the machine's function.

Freezer compartment:

The moisture condenses on the evaporator, is periodically defrosted and evaporates.

▶ The appliance does not have to be manually defrosted.

6.3 Cleaning the ventilation grid

The ventilation grid ensures that the appliance works properly due to optimum aeration and ventilation.

▶ Clean the ventilation grid regularly with a vacuum cleaner.
▶ Remove stubborn stains with a soft cloth.

When the timer is set a message on the display prompts you to clean it. The clean ventilation grid symbol appears on the screen.



▶ Press the clean ventilation grid symbol.
▷ The display switches to the home screen.

The message can be displayed again by pressing the menu field until it has been cleaned and this has been confirmed. (see 8 Messages) .

Confirming that the ventilation grid has been cleaned

▶ Press menu.
▶ Press the navigation arrows until the ventilation grid is displayed.



▶ Press the ventilation grid symbol.
▶ Press the navigation arrows until clean ventilation grid is displayed.



▶ Press RESET.
▷ The timer is reset. The cleaning interval starts all over again.



Turning the timer off

If the reminder function is to be switched off the timer can be turned off.

▶ Press menu.
▶ Press the navigation arrows until the ventilation grid is displayed.



▶ Press the ventilation grid symbol.
▶ Press OFF.
▷ The timer is turned off.

6.4 Cleaning the appliance

Clean the appliance regularly.

WARNING
Risk of injury and damage as a result of hot steam!
Hot steam can lead to burns and can damage the surfaces.
▶ Do not use any steam cleaners!

NOTICE
Incorrect cleaning damages the appliance!
▶ Do not use cleaning agents in concentrated form.
▶ Do not use any scouring or abrasive sponges or steel wool.
▶ Do not use any sharp or abrasive cleaning agents, nor any that contain sand, chloride or acid.
▶ Do not use chemical solvents.
▶ Do not damage or remove the type plate on the inside of the appliance. It is important for the customer service.
▶ Do not pull off, bend or damage cables or other components.
▶ Do not allow any cleaning water to enter the drain channel, ventilation grille or electrical parts.
▶ Please use soft cleaning cloths and a universal pH-neutral cleaning agent.
▶ Please use cleaning and care products suitable for contact with foodstuffs in the appliance interior.

▶ **Empty appliance.**
▶ **Pull out the power plug.**



▶ Clean **plastic outer and inner surfaces** with lukewarm water and a little washing-up liquid.

NOTICE
Risk of damage from stainless steel care products!
The **stainless steel doors** and **stainless steel side panels** are treated with a premium surface finish.

Stainless steel care products attack these surfaces.



▶ Only use a soft, clean cloth to wipe down **finished door and side panel surfaces** and **painted door and side panel surfaces**. To remove heavy dirt, use a little water or neutral detergent. Alternatively, you can use a micro-fibre cloth.

Do not clean the **glass door** with abrasive cleaning agents or rough cloths. Otherwise the surface and the frame may become dull or be scratched.

▶ Clean the glass door with a standard glass cleaning agent and a soft cloth.
▶ Most of the **parts** can be dismantled for cleaning: see the relevant chapter.
▶ **Clean drawers** by hand with lukewarm water and a little washing up liquid.
▶ Wipe **wooden grid shelves** with a dry lint-free cloth.

Note

▶ Do not clean wooden grid shelves with water and washing-up liquid.

▶ Clean **other items of equipment** by hand with lukewarm water and a little washing-up liquid.
▶ Only use a damp cloth to clean the **telescopic rails**. The grease in the runners is for lubrication purposes and must not be removed.

After cleaning:

▶ Wipe dry the appliance and items of equipment.
▶ Connect the appliance and switch it on again.
▶ Switch on SuperFrost (see 5.4.5 SuperFrost) .
When the temperature is sufficiently cold:

▶ Put the food back inside.

6.5 Cleaning the IceMaker

The IceMaker drawer must be emptied and pushed in. The IceMaker must be switched on.

▶ Press Menu.
▶ Press the navigation arrows until the IceMaker is displayed.
▶ Press the IceMaker symbol.
▶ Press the navigation arrow until the cleaning position is displayed.



▶ Press ON.
▷ The ice cube tray moves to the cleaning position. The screen cannot be used during this process.
▷ OFF appears: The rotary movement stops and the IceMaker switches off for cleaning.
▶ Remove the drawer.
▶ Clean the ice cube tray and drawer with a soft cleaning cloth and warm water. If necessary use a mild detergent. Then rinse out.
▶ Push the drawer in.
▶ Press OFF.
▷ The ice cube tray moves to the operating position.

NOTICE
Rinse agent residue in the ice compartment and drawer.
Nausea or irritation of the mucous membrane.
▶ Remove rinse agent residue: Discard the first three batches of ice cubes.

▶ Leave the IceMaker switched on.
-or-
▶ Switch the IceMaker off (see 5 Control)

6.6 Customer service

First check whether you can rectify the fault yourself (see 7 Malfunctions) . If you cannot rectify the problem, contact Customer Services. You can find the address in the enclosed Customer Service Directory.

WARNING
Risk of injury if repair work is not carried out professionally!
▶ Have any repairs and action - not expressly specified - on the appliance and mains cable carried out by service personnel only. (see 6 Maintenance)

Call up the appliance designation (model and index), service no. (service), serial no. (s-no.) as well as the expanded functions on the screen:
▶ Press menu.
▶ Press the navigation arrows until the appliance information symbol is displayed.



▶ Press the appliance information symbol.
▷ The appliance information is displayed.
▶ Note down the appliance information.
▶ To return to the home screen press the Back symbol.

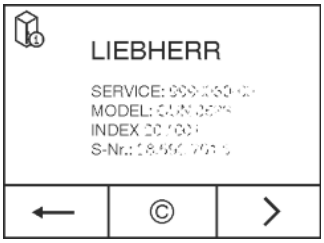

▶ To access the customer menu, press it until the key symbol appears.



▶ Enter the numerical code **151** to select the customer menu.

Customer menu

The following functions can be called up in the customer menu:

- **Self diagnostics**
  The appliance carries out self diagnostics and checks all electrical components.
- **RESET**
  The appliance is reset to the factory settings.
- **Manual defrosting**
  Manual defrosting starts.
- **Water supply time**
  This function is active for appliances with an ice cube maker. The size of the ice cubes is determined by the water supply time.

▶ Close the door.
▶ Contact customer service and give them the required appliance information.
▷ This will help us to provide you with a faster, more accurate service.
▶ Follow any further instructions given by Customer Services.

Alternatively you can read off the appliance information from the model plate:

The model plate is inside the appliance on the left-hand side.

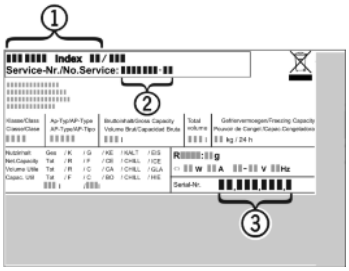

Fig. 64

(1) Appliance description **(3)** Serial no.
(2) Service no.

Licence agreements:
Licences used can be viewed at ©.
▶ Press ©.

7 Malfunctions

Your appliance is designed and manufactured for a long life span and reliable operation. If a malfunction nonetheless occurs during operation, check whether it is due to a handling error. In this case you will have to be charged for the costs incurred, even during the warranty period. You may be able to rectify the following faults yourself:

Appliance does not work.
→ The appliance is not switched on.
▶ Switching on the appliance.
→ The power plug is not properly inserted in the wall socket.
▶ Check power plug.
→ The fuse of the wall socket is not in order.
▶ Check fuse.
→ The appliance plug does not fit the appliance properly.
▶ Check the appliance plug.

The compressor runs for a long time.
→ The compressor switches to a low speed when little cold is needed. Although the running time is increased as a result, energy is saved.

▶ This is normal in energy-saving models.
→ SuperFrost is activated.
▶ The compressor runs for longer in order to rapidly cool the food. This is normal.

Excessive noise.
→ Due to the various speed steps, speed-regulated* compressors can generate different running noises.
▶ The sound is normal.

A bubbling and gurgling noise.
→ This noise comes from the refrigerant flowing in the refrigeration circuit.
▶ The sound is normal.

A quiet clicking noise.
→ The noise is produced whenever the refrigeration unit (motor) automatically switches on or off.
▶ The sound is normal.

A hum. It is briefly a little louder when the refrigeration unit (the motor) switches on.
→ The refrigeration increases automatically when the SuperFrost, function is activated, fresh food has just been placed in the appliance or the door has been left open for a while.
▶ The sound is normal.
→ The ambient temperature is too high.
▶ Solution: (see 1.2 Appliance range of use)

A low hum.
→ The sound is produced by air flow noise of the fan.
▶ The sound is normal.

Vibration noises
→ The appliance is not standing firmly on the floor. As a result objects and adjacent units start to vibrate when the refrigerator is running.
▶ Align the appliance using the adjustable feet.
▶ Keep bottles and jars apart.

Flow sound at the soft stop mechanism.
→ The noise is produced when the door is opened and closed.
▶ The sound is normal.

Mould on wine bottles
→ Similarly as with other forms of storage, a little mould may form depending on the type of adhesive used for the label.
▶ Remove residual adhesive.

The DEMO symbol appears on the screen. In addition some time elapses.
→ DEMO mode is activated.
▶ OFF Press .

DEMO is displayed in the top right corner of the screen.
→ DEMO mode is activated.
▶ Unplug the appliance.
▶ Plug the appliance in again.
▷ The DEMO symbol appears on the screen. In addition some time elapses.
▶ OFF Press .

The outer surfaces of the appliance are warm*.
→ The heat of the refrigeration circuit is used to prevent condensate from forming.
▶ This is normal.

The IceMaker cannot be switched on.
→ The appliance and therefore the IceMaker are not connected.
▶ Connect the appliance to the mains (see 4 Putting into operation) .

The IceMaker does not make any ice cubes.
→ The IceMaker is not switched on.
▶ Switch on the IceMaker.
→ The drawer of the IceMaker is not properly closed.
▶ Close the drawer properly.
→ The water connection is not open.
▶ Open the water connection.

Functions in the IceMaker submenu do not start.
→ Ice cube tray rotates.
▶ Try again after 1 minute.

The temperature is not cold enough.
→ The door of the appliance is not properly closed.
▶ Close the door of the appliance.
→ Insufficient ventilation.
▶ Keep ventilation grille clear, and clean it.
→ The ambient temperature is too high.
▶ Solution: (see 1.2 Appliance range of use) .
→ The appliance was opened too frequently or for too long.
▶ Wait to see whether the appliance reaches the required temperature by itself. If not, please contact the after sales service (see 6 Maintenance) .
→ Too much fresh food was placed inside without SuperFrost.
▶ Solution: (see 5.4.5 SuperFrost)
→ The temperature is incorrectly set.
▶ Set the temperature to a colder setting and check after 24 hours.
→ The appliance is too close to a source of heat (stove, heater etc).
▶ Change the position of the appliance or the source of heat.

The internal light does not come on.
→ The appliance is not switched on.
▶ Switch the appliance on.
→ The door was open for longer than 15 minutes.
▶ The internal light switches itself off automatically after about 15 minutes if the door is open.
→ The LED illumination is faulty or the cover is damaged:

WARNING
Risk of injury due to electric shock!
There are live electrical parts under the cover.
▶ Only ever have the inside LED light replaced or repaired by customer service or trained personnel.

WARNING
Risk of injury from LED bulb!
The light intensity of the LED light corresponds to hazard group RG 2.
If the cover is defective:
▶ Do not look directly into the light from close range. It cause injury to the eyes.

The door seal is defective or needs to be replaced for another reason.
→ The door seal can be replaced. It can be replaced without the need for special tools.
▶ Contact Customer Service (see 6 Maintenance) :

The unit has iced up or condensation has formed.
→ The door seal may have also slipped out of its groove.
▶ Check to ensure that the door seal is seated properly in the groove.

8 Messages

Error messages and reminders are displayed by an audible signal and a message on the screen. The audible signal gets louder and louder when error messages appear. It only stops when the message is confirmed. Highest priority messages are displayed first

if several occur at the same time. Each message must be cleared separately.

The message stays in the menu field as long as it is active or the fault is not eliminated.

Note
Details on the message can be displayed again via the menu field.

▶ Press menu.
▶ Press the message symbol. ⚠
▶ The display switches to the next message when you press one. After the last active message the display switches to the home screen.

Door alarm



An audible warning sounds if the door is open for longer than 60 seconds. The door alarm symbol appears on the display. The audible warning stops automatically when the door is closed.

The audible warning can be switched off when the door is open. The audible alarm is switched off while the door is open.

▶ Press the door alarm symbol.
▷ The door alarm stops.
▷ The display switches to the home screen.
▶ Close the door.

Temperature alarm



If the temperature is too high or too low, the alarm will sound. The temperature alarm symbol appears on the display.

The temperature was set incorrectly in the last hours or days. When the fault is eliminated the appliance continues to work at the last temperature setting.

The reason for too high a temperature may be:

- hot, fresh food was inserted
- too much warm room air flowed in when rearranging and removing food
- the power was cut off for a while
- the appliance is faulty

▶ Open the door.
▶ Press the temperature alarm symbol.
▷ The audible signal stops. The warmest temperature reached during the malfunction is displayed on the screen.
▶ Press the screen or wait for 30 seconds.
▷ The display switches to the home screen. Arrows and the temperature alarm symbol appear in the relevant temperature field ⚠. In addition the messages symbol is displayed in the menu field ⚠.
▶ Check the food for quality. Do not consume spoiled food. Do not re-freeze defrosted food,
▶ Close the door.
▷ The symbols are greyed out when the target temperature is reached.

If the alarm status persists or the temperature cannot be reset independently:

(see 7 Malfunctions) .

Power cut



An audible warning sounds. The power cut symbol appears on the display.

The temperature had risen too high over the last few hours or days due to a power cut or power interruption. When the power is restored the appliance continues to work at the last temperature setting. Activated reminders are retained.

▶ Open the door.
▶ Press the power cut symbol.
▷ The audible signal stops. The warmest temperature reached in the freezer compartment during the power cut is displayed on the screen.
▶ Press the screen or wait for 30 seconds.
▷ The display switches to the home screen. Arrows and the symbol temperature alarm appear in the relevant temperature field ⚠. The messages symbol is also shown in the menu field ⚠.
▶ Check the food for quality. Do not consume spoiled food. Do not re-freeze defrosted food,
▶ Close the door.
▷ The symbols are greyed out when the target temperature is reached.

Appliance faults



An audible warning sounds. The appliance fault symbol appears on the display with the relevant error code.

An appliance component indicates a fault.

▶ Open the door.
▶ Note down the fault code.
▶ Press the appliance fault symbol.
▷ The audible signal stops. The display switches to the home screen.
▶ Close the door.
▶ Contact Customer Services (see 6 Maintenance) .

Water inlet fault



An audible warning sounds. The appliance fault symbol appears on the display with the WATER error code.

The water connection to the IceMaker is not open, the water feed is interrupted or the filter in the water inlet hose connection is blocked.

▶ Open the door.
▶ Press the appliance fault symbol.
▷ The audible signal stops. The display switches to the home screen. The IceMaker switches off.
▶ Close the door.
▶ Open the water connection.

-or-

▶ Check the water connection and the hoses (see 4 Putting into operation) .

-or-

▶ Clean the filter.
▶ Switch the IceMaker on (see 5.4.10.2 Switch the IceMaker on.) .
▶ Contact Customer Service if the message persists (see 6 Maintenance) .

Other messages



FreshAirChange filter (see 6 Maintenance)



Clean the ventilation grille (see 6 Maintenance)



Open, close IceMaker drawer

9 Decommissioning

9.1 Switching the appliance off

Note
If you cannot switch off the appliance or freezer section or wine cooler, turn off the childlock feature.
▶ Switch the child safety device off (see 5.2.2 Switching the child safety device off) .

9.1.1 Switch off the appliance from the menu

The whole appliance is switched off. The screen goes black.
▶ Press menu.
▶ Press the navigation arrows until the standby symbol is displayed.
▶ Press OK.
▷ The standby symbol flashes on the whole screen. The whole appliance is switched off.
▷ After 10 minutes the standby symbol goes out.

9.1.2 Switch the wine cooler off

You can switch off the wine cooler separately if required.
▶ Press the wine cooler field.
▶ Press plus.
▷ The plus symbol is greyed out if it is pressed again after selecting the hottest temperature. The standby symbol is displayed on the screen.
▶ OK Press .
▷ The standby symbol is displayed in the wine cooler field.
▷ The wine cooler is off.

9.2 Taking the appliance out of service

▶ Empty the appliance.
▶ Put the IceMaker in the cleaning position (see 6 Maintenance) .
▶ Switch off the appliance (see 9 Decommissioning) .
▶ Remove mains connector.
▶ Remove appliance connector if required: Remove and move from left to right at the same time.
▶ Clean the appliance (see 6.4 Cleaning the appliance) .
▶ Leave the door open to prevent odour.

10 Disposing of the appliance

The appliance contains some reusable materials and should be disposed of properly - not simply with unsorted household refuse. Appliances which are no longer needed must be disposed of in a professional and appropriate way, in accordance with the current local regulations and laws.

Do not damage the refrigeration circuit of the old appliance during removal to prevent the refrigerant contained (information on the type plate) and the oil from escaping in an uncontrolled manner.

For Germany:

The appliance can be disposed of free of charge in Class 1 collection containers at your local recycling centre. When purchasing a new fridge/freezer and if your sales area is > 400 m^2, the retailer with also take back the old appliance free of charge.

Decommission the appliance:
▶ Pull out the plug.
▶ Remove the connection cable from the appliance.

Liebherr-Hausgeräte Ochsenhausen GmbH
Memminger Straße 77-79
88416 Ochsenhausen
Deutschland

home.liebherr.com