User Guide

Quality, Design and Innovation

home.liebherr.com/fridge-manuals

LIEBHERR

Contents

1 Appliance at a glance..... 2
1.1 Scope of delivery..... 2
1.2 Overview of the appliance and its equipment..... 3
1.3 Appliance range of use..... 3
1.4 Conformity..... 3
1.5 EPREL database..... 3

2 General safety instructions..... 3

3 Putting into operation..... 5
3.1 Switching on appliance..... 5
3.2 Inserting the components..... 5

4 Foods management..... 5
4.1 Storing food..... 5
4.2 Storage times..... 6

5 Saving energy..... 6

6 Controls..... 6
6.1 Controls and displays..... 6
6.1.1 Status display..... 6
6.1.2 Navigation..... 6
6.1.3 Operating structure..... 7
6.1.4 Display symbols..... 7
6.2 Control concept..... 7
6.2.1 Activating/deactivating the function..... 7
6.2.2 Select the function value..... 8
6.2.3 Activating/deactivating settings..... 8
6.2.4 Selecting the setting value..... 8
6.2.5 Go to the Customer menu..... 8
6.3 Functions..... 9
6.3.1 Setting the temperature..... 9
SuperCool..... 9
SuperFrost..... 9
PowerCool..... 9
PartyMode..... 9
HolidayMode..... 9
E-Saver..... 10
IceMaker*..... 10
IceMaker*..... 10
MaxIce*..... 10
MaxIce*..... 10
6.4 Settings..... 10
6.4.1 Activating/deactivating settings..... 10
Connecting to the WLAN..... 10
Entry lock..... 11
Display brightness..... 11
Door alarm..... 11
Info..... 11
SabbathMode..... 11
CleaningMode*..... 12
TubeClean*..... 12
Ice cubes*..... 12
Reminder..... 12
Turn off appliance..... 12
6.5 Warnings..... 13
6.5.1 Message..... 13
6.5.2 DemoMode..... 13

7 Features..... 13
7.1 Door rack..... 13
7.2 Shelves..... 13
7.3 Dividing shelf*..... 14
7.4 VarioSafe*..... 14
7.5 Space for baking tray..... 15
7.6 Drawers..... 15
7.7 EasyFresh-Safe cover..... 16
7.8 Adjusting the moisture levels..... 16
7.9 IceMaker*..... 16
7.10 VarioSpace..... 17
7.11 Accessories..... 17

8 Maintenance..... 17
8.1 FreshAir carbon filter..... 17
8.2 Defrosting the appliance..... 18
8.3 Cleaning the appliance..... 18

9 Customer help..... 19
9.1 Technical specifications..... 19
9.2 Operating noises..... 19
9.3 Technical fault..... 20
9.4 Customer Services..... 21
9.5 Model plate..... 21

10 Shutting down..... 21

11 Disposing of the appliance..... 22

The manufacturer works constantly on the further development of all the types and models. Therefore please understand that we have to reserve the right to make design, equipment and technical modifications.

To get to know all the benefits of your new appliance, please read the information contained in these instructions carefully.

The instructions apply to several models. Differences may occur. Text relating only to specific appliances is marked with an asterisk (*).

Instructions are marked with a , and results are marked with a .

1 Appliance at a glance

1.1 Scope of delivery

Check all parts for damage during transport. If you have any complaints, please contact your retailer or Customer Services (see 9.4 Customer Services) .

Your new appliance comes with the following parts:

- Built-in appliance
- Features (depending on the model)
- Installation materials (depending on the model)
- Quick Start Guide
- Installation Guide
- Service Brochure

1.2 Overview of the appliance and its equipment

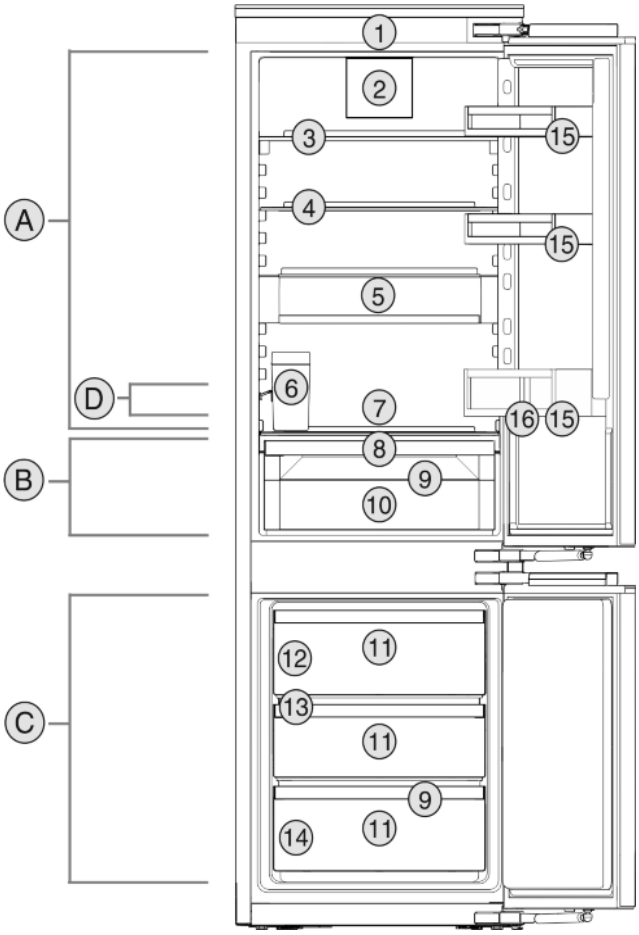

Fig. 1 Example illustration

Temperature range

(A) Fridge section
(B) EasyFresh
(C) Freezer compartment
(D) Coldest zone

Features

(1) Controls
(2) Fan with FreshAir active carbon filter
(3) Split shelf*
(4) Shelf
(5) VarioSafe*
(6) IceMaker water tank*
(7) Space for baking tray
(8) EasyFresh-Safe cover
(9) Drainage outlet
(10) EasyFresh-Safe
(11) Freezer compartment
(12) IceMaker*
(13) VarioSpace
(14) Nameplate
(15) Door rack
(16) Bottle rack

Note

▶ The default arrangement of the shelves, drawers and baskets is best for energy efficiency.

1.3 Appliance range of use

Intended use

The appliance is only suitable for cooling food products in a domestic or household-like environment. This includes, for example, use:

- in staff kitchens, bed and breakfast establishments,
- by guests in country houses, hotels, motels and other accommodation,
- for catering and similar services in the wholesale trade.

All other types of use are not permitted.

Foreseeable misuse

The following applications are expressly forbidden:

- Storing and refrigerating medicines, blood plasma, laboratory preparations or similar substances and products based on the Medical Device Directive 2007/47/EC
- Use in areas at risk of explosions

Misusing the appliance may lead to damage to the goods stored or they may spoil.

Climate classifications

Depending on the climate classification the appliance is designed to operate in restricted ambient temperatures. The climate classification applying to your appliance is printed on the rating plate.

Note

▶ Keep to the specified ambient temperatures in order to guarantee that the appliance works properly.

Climate classification	for ambient temperatures of
SN	10 °C to 32 °C
N	16 °C to 32 °C
ST	16 °C to 38 °C
T	16 °C to 43 °C

1.4 Conformity

The refrigerant circuit has been tested for leaks. In installed condition, this appliance complies with the applicable safety stipulations and with directives 2014/35/EU, 2014/30/EU, 2009/125/EG, 2011/65/EU and 2010/30/EU.

1.5 EPREL database

Details about energy labelling and ecodesign requirements will be available on the European product database (EPREL) from 1st March 2021. You can access the product database at the following link: https://eprel.ec.europa. eu/ You will be asked to enter the model ID. You can find the model ID on the nameplate.

2 General safety instructions

Danger for the user:

- This device can be used by children and people with impaired physical, sensory or mental abilities or with a lack of experience and knowledge provided that they are supervised or have received instruction in

the safe use of this device, and about the resulting hazards. Children must not play with this appliance. Cleaning and user maintenance work must not be carried out by children without adult supervision. Children aged between 3 and 8 are allowed to load and unload the appliance. Children below the age of 3 must be kept away from the appliance unless they are under continuous adult supervision.
- When disconnecting the appliance from the supply, always take hold of the plug. Do not pull the cable.
- In the event of a fault pull out the mains plug or deactivate the fuse.
- Do not damage the mains power cable. Do not operate the appliance with a defective mains power cable.
- Only customer service or other specially trained staff may repair or perform other operations on the appliance.
- Only install, connect and dispose of the appliance according to the instructions.
- Only use the appliance when it is installed.
- Please keep these instructions in a safe place and pass them on to any subsequent owners.

Fire hazard:

- The coolant used (information on the model plate) is eco-friendly but also flammable. Any leaking coolant may ignite.
  - Do not damage the refrigerant circuit pipes.
  - Do not handle ignition sources inside the appliance.
  - Do not use electrical appliances inside the appliance (e.g. steam cleaners, heaters, ice cream makers, etc.).
  - If the refrigerant leaks: remove any naked flames or ignition sources from the vicinity of the leakage point. Properly air the room. Inform customer services.
- Do not store explosives or sprays using combustible propellants such as butane, propane, pentane, etc. in the appliance. To identify these spray cans, look for the list of contents printed on the can, or a flame symbol. Gases possibly escaping may ignite due to electrical components.
- Please be sure to store alcoholic drinks or other packaging containing alcohol in tightly closed containers. Any alcohol that leaks out may be ignited by electrical components.

Danger of tipping and falling:

- Do not misuse the plinth, drawers, doors etc. as a step or for support. This applies particularly to children.

Danger of food poisoning:

- Do not consume food which has been stored too long.

Danger of frostbite, numbness and pain:

- Avoid prolonged skin contact with cold surfaces or refrigerated/frozen goods or take protective measures, e.g wear use gloves.

Danger of injury and damage:

- Hot steam can lead to injury. Do not use electrical heating or steam cleaning equipment, open flames or defrosting sprays to defrost.
- Do not use sharp implements to remove the ice.

Danger of crushing:

- Do not hold the hinge when opening and closing the door. Fingers may get caught.

Risk of damage to slate front:

- Please do not affix stickers to the front.

Symbols on the appliance:



The symbol can be located on the compressor. It refers to the oil in the compressor and indicates the following danger: Swallowing or inhaling can be fatal. This is only relevant for recycling. There is no danger in normal operation.



This symbol is found on the compressor and indicates the danger of flammable materials. Do not remove the sticker.



A sticker to this effect may be applied to the rear of the appliance. It refers to the foam-padded panels in the door and/or the housing. This is only relevant for recycling. Do not remove the sticker.

Please observe the specific information in the other sections:

	DANGER	identifies a situation involving direct danger which, if not obviated, may result in death or severe bodily injury.
	WARNING	identifies a dangerous situation which, if not obviated, may result in death or severe bodily injury.
	CAUTION	identifies a dangerous situation which, if not obviated, may result in minor or medium bodily injury.
	NOTICE	identifies a dangerous situation which, if not obviated, may result in damage to property.
	Note	It contains useful instructions and tips.

*** Depending on model and options**

3 Putting into operation

3.1 Switching on appliance

Ensure that the following conditions are met:

- ❑ Appliance is installed and connected according to installation instructions.
- ❑ All adhesive strips, adhesive and protective films as well as transport safety devices in and on the appliance are removed.
- ❑ All marketing leaflets are removed from the drawers.

▶ Switch on the appliance via the control panel next to the display.

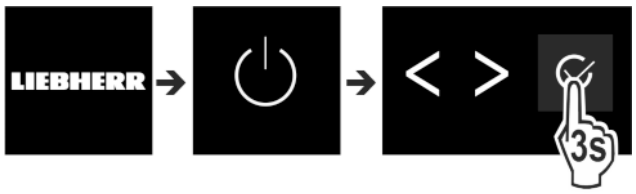

Fig. 2

▶ The status screen appears.

▶ If DemoMode is displayed after switching on the appliance, DemoMode can be deactivated within the next 5 minutes.

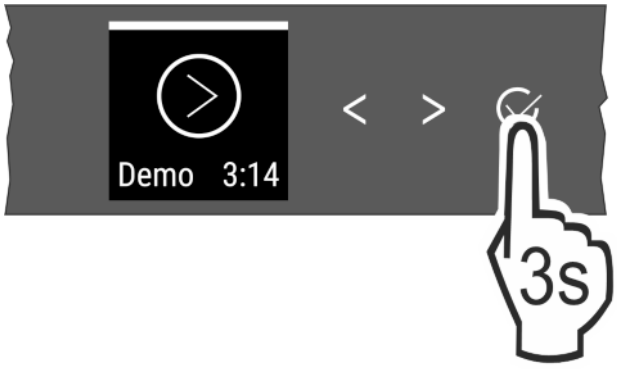

Fig. 3

▶ Press confirmation next to the display for 3 seconds.

▷ DemoMode is deactivated.

Note

The manufacturer recommends:

▶ Storing food: wait approx. 6 hours for the set temperature to be reached.

▶ **Store frozen produce**at -18 °C or colder.

3.2 Inserting the components

▶ Insert the supplied components to make the most of your appliance.

▶ Purchase and install the SmartDevice Box (see https://smartdevice.liebherr.com/install).

▶ Install the SmartDevice app (see https://apps.home.liebherr.com/).

Note

You can purchase accessories from the Liebherr household appliance store (home.liebherr.com).

4 Foods management

4.1 Storing food

WARNING

Risk of fire

▶ Do not use any electrical appliances in the food area of the appliance unless recommended by the manufacturer.

When storing food, always observe the following:

- ❑ Air vents on the inside rear wall are unobstructed.
- ❑ Air vents on the fan are unobstructed.
- ❑ Food is in sealed packaging.
- ❑ Foods that easily absorb or give off smell or taste are stored in sealed containers or covered.
- ❑ Raw meat and fish are in clean, sealed containers to prevent them coming into contact with or dripping onto other foods.
- ❑ Liquids are in sealed containers.
- ❑ Foods are not stored too closely together, as the air needs to circulate.

Note

Failure to follow these guidelines can lead to food perishing.

4.1.1 Fridge section

The natural air circulation creates a range of temperatures.

Arrange your food as follows:

▶ In the top section and in the door: butter and cheese, preserves and tubes.

▶ In the coldest zone *Fig. 1 (D)*: Perishable foods such as ready-to-eat meals, meat and sausages

▶ On the bottom shelf: Raw meat and fish

4.1.2 EasyFresh-Safe

This compartment is great for non-packaged foods, such as fruit and vegetables.

The air moisture in the compartment depends on the moisture content of the items being stored and the number of times the door is opened. You can adjust the air moisture.

Arrange your food as follows:

▶ Store your loose fruit and vegetables.

▶ Excessive air moisture: Regulate the air humidity (see 7.8 Adjusting the moisture levels) .

4.1.3 Freezer compartment

This provides a dry, frosty storage climate at -18 °C. A frosty climate is great for storing frozen food and frozen goods for several months, making ice cubes and freezing fresh food.

Freezing food

You can freeze as many kilograms of fresh food within 24 hours as indicated on the nameplate (see 9.5 Model plate) under "freezing capacity ... kg/24h".

So that the food is rapidly frozen through to the core, keep to the following quantities per pack:

- Fruit, vegetables up to 1 kg
- Meat up to 2.5 kg

Before freezing goods, please make sure of the following:

- ❑ Appliances without NoFrost:*
  SuperFrost is activated (see 6.3 Functions) when the amount of food to freeze exceeds approx. 1 kg.
  *
- ❑ Appliances with NoFrost:*

SuperFrost is activated (see 6.3 Functions) when the amount of food to freeze exceeds approx. 2 kg.
*

- ❑ With a small amount to freeze: SuperFrost is on for about 6 hours beforehand.
- ❑ With a maximum amount to freeze: SuperFrost is on for about 24 hours beforehand.

Arrange your food as follows:

CAUTION
Risk of injury from glass fragments!
Drink bottles and cans may explode if frozen. This applies particularly to carbonated drinks.
▶ Do not freeze bottles and cans of drink!

Appliances with NoFrost:*
With a small amount to freeze:*
▶ Put packaged food in the top drawers.*
With a maximum amount to freeze:*
▶ Remove the top drawers and place the packaged food onto the top shelves.*

Appliances without NoFrost:*
With a small amount to freeze:*
▶ Put packaged food into the bottom drawers.*
With a maximum amount to freeze:*
▶ Remove the bottom drawer and place the packaged food straight into the appliance so that it is in contact with the floor or side walls.*

For all appliances:*
With the maximum frozen quantities:
▶ Once SuperFrost turns off automatically, place the food in the drawer compartment.

Defrost the food

- In the fridge
- In the microwave
- In the stove/oven
- At room temperature

WARNING
Risk of food poisoning!
▶ Do not re-freeze thawed food.

▶ Only take out the food you need at the time.
▶ Cook defrosted food as soon as possible.

4.2 Storage times

Refer to the specified storage times as a guide.

In the case of foods with a minimum shelf life, the date indicated on the packaging still applies.

4.2.1 Fridge section

Always follow the best-before date stated on the packaging.

4.2.2 Freezer compartment

Recommended storage period for various types of food		
Ice cream	at -18 °C	2 to 6 months
Sausages, ham	at -18 °C	2 to 3 months
Bread, baked goods	at -18 °C	2 to 6 months
Game, pork	at -18 °C	6 to 9 months
Fatty fish	at -18 °C	2 to 6 months
Lean fish	at -18 °C	6 to 8 months
Cheese	at -18 °C	2 to 6 months
Poultry, beef	at -18 °C	6 to 12 months
Vegetables, fruit	at -18 °C	6 to 12 months

5 Saving energy

- Pay attention to good ventilation. Do not cover ventilation holes or grids.
- Always keep the fan air slits clear.
- Do not install the appliance in direct sunlight, next to an oven, radiator or similar.
- Energy consumption depends on the installation conditions, e.g. the ambient temperature (see 1.3 Appliance range of use) . A warmer ambient temperature can increase the energy consumption.
- Open the appliance for as short a time as possible.
- The lower the temperature is set the higher the energy consumption.
- Sort your food: home.liebherr.com/food.
- Keep all food properly packed and covered. This prevents frost from forming.
- Only take food out for as long as necessary so that it doesn't warm up too much.
- Inserting warm food: allow to cool down to room temperature first.
- Thaw frozen food in the refrigerator.
- If there is a thick layer of frost in the appliance: defrost the appliance.*
- For longer periods of absence, use HolidayMode (see HolidayMode) .

6 Controls

6.1 Controls and displays

The display provides a quick overview of the temperature setting and the status of functions and settings. You can control the functions and settings either by deactivating/activating them or by selecting a value.

6.1.1 Status display

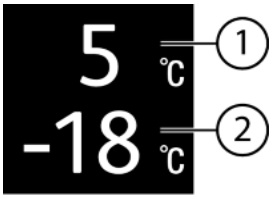

Fig. 4

(1) Temperature display of the fridge section
(2) Freezer compartment temperature display

6.1.2 Navigation

Navigate in the menu to see the individual functions. An audible signal sounds after confirming a function or setting. If no selection is made after 10 s the display switches to the Status screen.

You can manage the appliance with the following symbols:

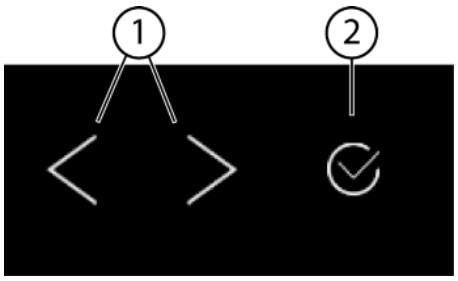

Fig. 5

(1) Navigation arrow left/ right
(2) Confirm

Navigation arrow left/right *Fig. 5 (1)*:

- Navigating in the menu. After the last menu page, it goes back to the first one.
- Navigate in the submenu. After the last submenu page, it goes back to the first one.

Confirm *Fig. 5 (2)*:

- Activating/deactivating the function.
- Open the submenu.
- Confirm your selection. The display returns to the menu.

Back:

- Confirm your select in the submenu. The display returns to the menu.
-  . The display returns to the function/setting.

Back to Status display:

- Close and open the door.
- Wait 10 s. The display switches to the Status display.

6.1.3 Operating structure

The controls are explained by a template. The display changes depending on the function or settings.

Menus without a submenu

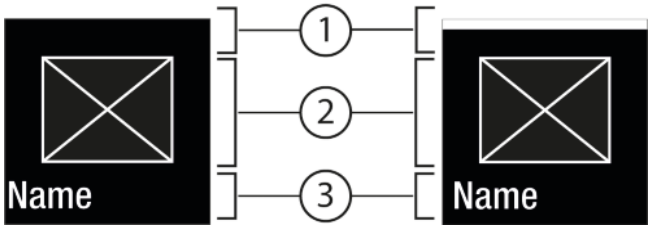

Fig. 6

(1) Status
(1) off / on
(2) Symbol or activated value
(3) Menu: Function name or menu: Setting name

You can navigation as follows:

- Press the left/right *Fig. 5 (1)* arrow to navigate.
- Press Confirm *Fig. 5 (2)* to activate *Fig. 6 (1)* / deactivate *Fig. 6 (1)* the function.

Menus with a submenu

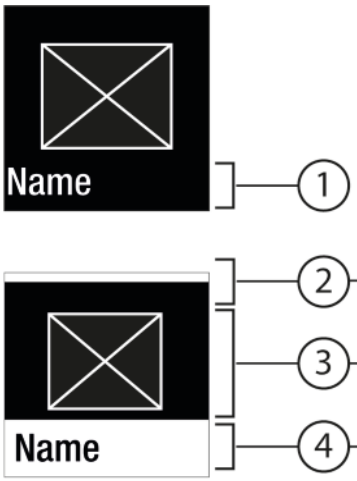

Fig. 7

(1) Menu: Function name or menu: Setting name
(2) Status
(2) off / on
(3) Symbol or activated value
(4) Submenu: function name or submenu: Setting name

You can navigation as follows:

- Press the left/right *Fig. 5 (1)* arrow to navigate.
- Press Confirm *Fig. 5 (2)* to open the submenu *Fig. 7 (4)*.
  - Press the left/right *Fig. 5 (1)* arrow to navigate.
  - Set a new value: Press Confirm *Fig. 5 (2)* to select an active value *Fig. 6 (1)*.
  - Back to the menu: Press Confirm *Fig. 5 (2)* to select the active value *Fig. 6 (2)*.

6.1.4 Display symbols

Display symbols provide information on the current appliance status:

Symbol	Appliance status
	**Standby** The appliance or temperature zone is switched off.
	**Flashing number** Appliance is working. Temperature flashes until the set temperature is reached.
	**Flashing symbol** Appliance is working. Setting is made.

6.2 Control concept

6.2.1 Activating/deactivating the function

You can activate/deactivate the following functions:

Symbol	Function
	SuperCool[x]
	PowerCool[x]
	SuperFrost[x]

Symbol	Function
	IceMaker and MaxIce[x]*
	
	HolidayMode
	E-Saver

[x] When a function is on, the appliance works harder. This means the appliance could make louder noises and consume more energy.

▶ Press the navigation arrows *Fig. 5 (1)* until the appears.
▶ Press Confirm *Fig. 5 (2)*.
▷ You hear the confirmation tone.
▷ Status appears in the menu.
▷ Function is on/off.

6.2.2 Select the function value

With the following functions you can set a value in the submenu:

Symbol	Function
	**Cool:** Setting the temperature Turn on/off the temperature zone
	**Freeze:** Setting the temperature Turn on/off the temperature zone

▶ Press the navigation arrows *Fig. 5 (1)* until the function appears.
▶ Press Confirm *Fig. 5 (2)*.
▶ Press the navigation arrows *Fig. 5 (1)* to select the setting value.

Setting the temperature

▶ Press Confirm *Fig. 5 (2)*.
▷ You hear the confirmation tone.
▷ Status: On *Fig. 6 (1)* appears briefly in the submenu *Fig. 7 (4)*.
▷ Display switches back to the menu.

Switching the temperature zone on/off

▶ To Confirm, press for 3 seconds.
▷ You hear the confirmation tone.
▷ Display returns to the Status screen.

6.2.3 Activating/deactivating settings

You can activate/deactivate the following settings:

Symbol	Setting
	WiFi[1]
	Entry lock[2]
	SabbathMode[2]
	Cleaning Mode*[2*]

Symbol	Setting
	Reminders[1]
	Reset[2]
	Off [2]

▶ Press the navigation arrows *Fig. 5 (1)* until Settings appears.
▶ Press Confirm *Fig. 5 (2)*.
▶ Press the navigation arrows *Fig. 5 (1)* until you see the setting you want.

[1] **Activate setting (shortpress)**

▶ Press Confirm *Fig. 5 (2)*.
▷ You hear the confirmation tone.
▷ Status appears in the menu.
▷ Setting is on / off.

[2] **Activate setting (longpress)**

▶ To Confirm *Fig. 5 (2)*, press for 3 seconds.
▷ You hear the confirmation tone.
▷ Status appears in the menu.
▷ Display changes.

6.2.4 Selecting the setting value

With the following settings you can set a value in the submenu:

Symbol	Settings
	Brightness
	Door alarm

▶ Press the navigation arrows *Fig. 5 (1)* until Settings appears.
▶ Press Confirm *Fig. 5 (2)*.
▶ Press the navigation arrows *Fig. 5 (1)* until you see the setting you want.
▶ Press Confirm *Fig. 5 (2)*.
▶ Press the navigation arrows *Fig. 5 (1)* to select the setting value.
▶ Press Confirm *Fig. 5 (2)*.
▷ You hear the confirmation tone.
▷ Status appears briefly in the submenu.
▷ Display switches back to the menu.

6.2.5 Go to the Customer menu

You can see the following settings in the Customer menu:

Symbol	Function
	Defrost*[2*]
	TubeClean*[2*]
	Cube size*[1*]

▶ Press the navigation arrows *Fig. 5 (1)* until Settings appears.
▶ Press Confirm *Fig. 5 (2)*.

*** Depending on model and options**

▶ Press the navigation arrows *Fig. 5 (1)* until About appears in the display.
▶ Press Confirm *Fig. 5 (2)*.
▶ Go to the Customer menu: Enter the code 151.
▶ In the customer menu, press the navigation arrows *Fig. 5 (1)* until you see the setting you want.

[1] **Select the value**
▶ Press Confirm *Fig. 5 (2)*.
▷ You hear the confirmation tone.
▷ Status appears briefly in the display.
▷ Display switches back to the menu.

[2] **Activate the setting**
▶ ToConfirm *Fig. 5 (2)*, press for 3 seconds.
▷ You hear the confirmation tone.
▷ Status appears on the display.
▷ The symbol flashes as long as the appliance is working.

6.3 Functions

6.3.1 Setting the temperature

The temperature depends on the following factors:
- The amount of times the door is opened
- How long the door is open for
- The room temperature of the installation site
- The type, temperature and amount of food

Temperature zone	Recommended setting
5 °C section	Fridge 5 °C
-18 °C compartment	Freezer -18 °C

Setting the temperature
▶ Set the level (see 6.2 Control concept) .
▷ Set temperature is shown at the bottom right of the display.

Switching off a temperature zone

You can switch the fridge compartment off separately.

Switching off the freezer section turns off all the temperature zones.
▶ Turn off the IceMaker (see 6.3.9.2 Deactivating the function) *
▶ Set the level (see 6.2 Control concept) .
▷ appears.

SuperCool

This function selects the lowest cooling temperature. This gives you colder storage temperatures.

This function is relevant to the fridge section *Fig. 1 (A)*

Use:
- Cool large amounts of food quickly.

Activating/deactivating the function
▶ Using the fridge section: activate the function when you add the goods.
▶ Activating/deactivating (see 6.2 Control concept) .

The function automatically turns off. The appliance goes back to normal mode. The temperature adjusts itself to the set level.

SuperFrost

This function selects the lowest freezing temperature. This gives you colder storage temperatures.

This function refers to the freezer section *Fig. 1 (C)*.

Use:
- For storing more than 2 kg fresh food every day.
- Freezing fresh food quickly to the core.
- Increasing the cold reserves in the stored goods before defrosting the appliance.

Activating/deactivating the function

With a small amount to freeze:
▶ Activate 6 hours before use.
With a maximum amount to freeze:
▶ Activate 24 hours before use.
▶ Activating/deactivating (see 6.2 Control concept) .

The function automatically turns off. The appliance goes back to normal mode. The temperature adjusts itself to the set level.

PowerCool

This function provides the perfect blanket temperature to cool your food.

This function refers to the fridge section *Fig. 1 (A)*.

Use:
- At higher room temperatures (from approx. 35 °C)
- When humidity is high e.g. on summer days
- When storing moist goods, to avoid condensation building up inside

Activating/deactivating the function
▶ Activating/deactivating (see 6.2 Control concept) .

Note
The fan can run even when function is deactivated. This ensures optimal temperature distribution in the appliance.

▷ Function activated: Energy consumption of the appliance is slightly increased.

PartyMode

This option offers an assortment of special functions and settings that are useful if you are having a party.

The following functions are on:
- *SuperCool*
- *IceMaker* and *MaxIce**

All the functions can be adjusted flexibly and separately. Changes are discarded when the function turns off.

Activating/deactivating the function
▶ Activating/deactivating (see 6.2 Control concept) .
▷ On: All functions are activated at the same time.
▷ Off: Preset temperatures are restored.

After 24 hours the function turns off automatically.

HolidayMode

This function minimises the energy consumption during an extended absence. The temperature is increased to 15 °C.

The set freezer temperature remains unchanged.

This function refers to the fridge section *Fig. 1 (A)*.

Use:

- Save energy if you plan to be away for a while.
- Avoid coming home to bad smells and mould.

Activating/deactivating the function

▶ Empty everything from the fridge section.
▶ Activate/deactivate (see 6.2 Control concept) .
▷ On: Fridge temperature is raised.
▷ Off: preset temperature is restored.

E-Saver

This function is designed to reduce energy consumption. Higher temperatures are preset for all temperature zones, which means the appliance has to cool less frequently.

Temperature of the fridge section: 7 °C

Temperature of the freezer section: -16 °C

Use:

- Save energy.

Activating/deactivating the function

▶ Activating/deactivating (see 6.2 Control concept) .
▷ On: Higher temperatures are preset for all temperature areas.
▷ Off: Preset temperatures are restored.

IceMaker*

Ice cubes can be produced automatically with the IceMaker function. The quantity and size can be set.

Use:

- Customise your ice cubes.

Activating/deactivating the function

▶ Activating/deactivating (see 6.2 Control concept) .

IceMaker*

This function creates ice cubes.

This function refers to the freezer section *Fig. 1 (C)*.

Use:

- Produces ice cubes.

Activating the function

Ensure that the following conditions are met:

❑ The IceMakeris working (see 7.9 IceMaker*) .
❑ The water tank is full (see 7.9.1 Fill the water tank) .

▶ Activate the function (see 6.2 Control concept) .
▷ It can take up to 24 hours for the first ice cubes to be made.

Deactivating the function

Ensure that the following conditions are met:

- The water tank is empty (see 7.9.1 Fill the water tank) .

▶ Deactivating the function (see 6.2 Control concept) .
▷ If ice cubes are being made, the system completes the process. After that, the IceMaker turns off.

Note
IceMaker is off: you can store food items up to a max. height of 10 cm in the drawer.

MaxIce*

Ice cubes can quickly be produced at 1.5 kg / 24 hours using the MaxIce function.

Use:

- When activating the IceMaker, you can choose between normal mode and MaxIce.

Activating/deactivating the function

▶ Activating/deactivating (see 6.2 Control concept) .

*MaxIce**

Using the MaxIce function, ice cubes can quickly be produced at 1.5 kg / 24 h.

Use:

- To make a lot of ice cubes very quickly.

Activating/deactivating the function

▶ Activating/deactivating (see 6.2 Control concept) .

6.4 Settings

This setting lets you choose the language of the display.

Choose from the following languages:

- German
- English
- French
- Spanish
- Italian
- Dutch
- Czech
- Polish
- Portuguese
- Russian
- Chinese

6.4.1 Activating/deactivating settings

▶ Activating/deactivating (see 6.2 Control concept) .

Connecting to the WLAN

This setting connects the appliance to the internet. The connection is managed in the SmartDevice-Box. You can use the SmartDevice-App to add your appliance to a SmartHome-System. Use the SmartDevice-App or other compatible partner networks to enjoy advanced options and settings.

Note
The SmartDevice Box is available from the Liebherr home appliance store (home.liebherr.com).

More information about availability, requirements and the individual options, can be found online at smartdevice.liebherr.com.

Use:

- Manage the appliance with the SmartDevice-App or a compatible partner network.
- Enjoy advanced functions and settings.
- Check the current status of the appliance in the SmartDevice-App.

❑ The SmartDevice Box is purchased and installed (see https://smartdevice.liebherr.com/install).
❑ The SmartDevice app is installed (see https://apps.home.liebherr.com/).

Setting up the connection

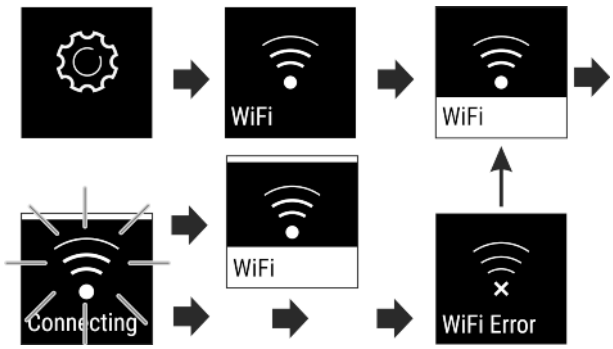

Fig. 8

▶ Activating the setting (see 6.2 Control concept) .
▷ The connection is set up: Status: on *Fig. 6 (1)* and WiFi connecting appears. The symbol flashes.
▷ The connection is set up: Status: on *Fig. 6 (1)* appears.
▷ The connection is set up: WiFi appears, the display turns blue.
▷ The connection failed: Status and Connect appears. The symbol appears permanently.

Disconnecting the appliance

▶ Deactivate the setting (see 6.2 Control concept) .

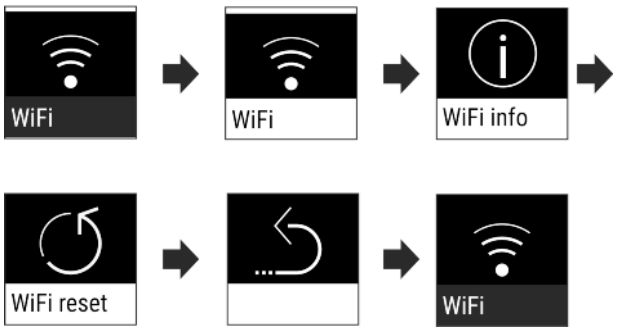

Fig. 9

▷ There is no connection: The symbol  is displayed constantly.

Restoring the connection

▶ Restore settings (see 6.2 Control concept) .

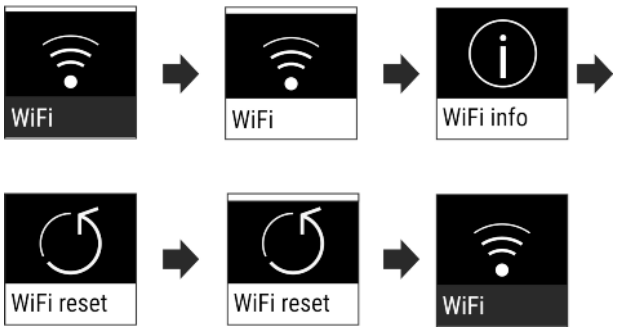

Fig. 10

▷ Connection and other settings are restored to factory settings.

Entry lock

This setting prevents unintentional use of the appliance, e.g. by children.

Use:
- Avoid settings being changed unintentionally.
- Avoid the appliance being switched off unintentionally.
- Avoid the temperature being changed unintentionally.

Activating/deactivating settings

▶ Activate/deactivate (see 6.2 Control concept) .

Display brightness

Set the brightness level of the display.

You can set the following brightness levels:
- 40%
- 60%
- 80%
- 100%

Choose the setting

▶ Set the level (see 6.2 Control concept) .

Door alarm

Set the time before the door alarm (see Close door) sounds.

The options are as follows:
- 1 min
- 2 min
- 3 min
- Off

Choose the setting

▶ Set the time (see 6.5 Warnings) .

Info

This setting gives you appliance data and access to the customer menu.

It provides the following information:
- Model name
- Index
- Serial number
- Service number

Show appliance data

▶ Press the navigation arrows *Fig. 5 (1)* until Settings appears.
▶ Press Confirm *Fig. 5 (2)*.
▶ Press the navigation arrows *Fig. 5 (1)* until the info appears.
▶ Read the appliance info.

SabbathMode

This setting meets the religious requirements on the Sabbath and Jewish festivals. Turn on SabbathMode to switch off certain controls. This means you can use the appliance without anyone changing the settings.

You can find a list of Star-K-certified appliances at www.star-k.org/appliances.

WARNING

Danger of food poisoning.

If there is a power cut while the appliance is in SabbathMode, this message is not saved. Once power is restored, the appliance continues in SabbathMode. When this mode is over no message about the power cut is displayed on the temperature display.

If there was a power cut during SabbathMode:

▶ Check the food for quality. Do not eat the food if it has thawed.

What happens on the appliance when in SabbathMode:

- The Status display permanently shows SabbathMode.
- The display is locked for all functions apart from turning off SabbathMode.
- Any functions/settings that are already on, remain active.
- The display stays bright when the door is closed.
- Reminders are disabled. The set time intervals are also paused. This function is disabled in SabbathMode.
- Reminders and warnings are not displayed. There are no acoustic signals, and the display does not show warnings or settings such as temperature alarm or door alarm.
- The IceMaker is out of use.*
- The internal light is off.
- The defrost cycle only works for the specified time without taking account of fridge use.
- After a power cut the appliance automatically returns to SabbathMode.

Activating/deactivating SabbathMode

▶ To activate the function, click the arrows next to the display until you see Settings in the menu and then confirm. The menu changes to show the available settings.

▶ Click the arrows next to the display until you see SabbathMode (Menora) appear. Confirm the symbol.

▷ A white bar appears in the top part of the display.

▷ SabbathMode is activated.

To deactivate this function, press the button for confirmation next to the display for 3 seconds.

SabbathMode is deactivated.

CleaningMode*

Use this setting to easily clean the appliance.*

This setting refers to the fridge section *Fig. 1 (A)*.*

Use:*

- Clean the fridge section by hand.

What happens on the appliance when this setting is on:*

- The fridge section is switched off.
- The internal light is on.
- Reminders and warnings are not shown. There is no acoustic signal.

Activating/deactivating settings*

▶ Activating/deactivating the setting (see 6.2 Control concept) .

▷ On: fridge section is off. Light stays on.

▷ Off: preset temperature is restored.

After 60 min the setting turns off automatically. The appliance then continues running in normal mode.

TubeClean*

This setting cleans the IceMaker pipes.

Ensure that the following conditions are met:

❑ IceMaker cleaning is ready (see 8.3.4 Cleaning the IceMaker*) .

Activating the setting

▶ Activate the setting in the Customer menu (see 6.2 Control concept) .

▷ The rinse process is ready (max. 60 min.): Symbol flashes.

▷ Water pipes are rinsed: Symbol flashes.

▷ Rinsing process is complete: Function turns off automatically.

Ice cubes*

Set the ice cube size.

Choose the setting

▶ Set the size in the Customer menu (see 6.2 Control concept) .

Reminder

Reminders are given out acoustically by a beep and visually by a symbol in the display. The signal gets louder until the alert stops.

Inserting the water tank

This message appears if there is not enough water in the water tank.

▶ Fill the water tank.

▷ The IceMaker produces ice cubes.

▶ If the water tank is full but you still see this message: check if the float is stuck.

▶ If necessary, drain the water and release the float with a thin object such as a cotton bud.

▶ If the water tank is full but you still see this message: please contact Customer Services (see 9.4 Customer Services) .

Replace FreshAir active carbon filter

This message appears when the air filter needs replacing.

▶ Change the air filter every six months.

▶ Confirm the message with OK.

▷ The service interval resets.

▷ The air filter guarantees the air quality in the fridge.

Insert IceMaker drawer*

This message appears if the IceMaker drawer is open.

▶ Push the IceMaker drawer in.

▷ The message disappears.

▷ The IceMaker produces ice cubes.

Activating the setting

▶ Activating/deactivating (see 6.2 Control concept) .

Turn off appliance

This setting turns off the whole appliance.

Switching off the entire appliance

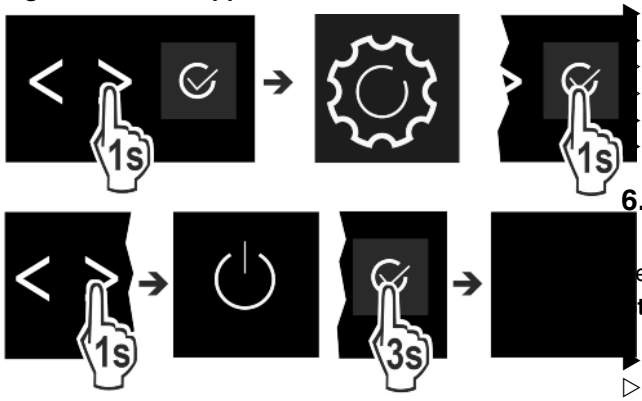

Fig. 11

▶ Turning off the IceMaker (see 6.3.9.2 Deactivating the function) .*
▶ Activating/deactivating (see 6.2 Control concept) .
▷ Off: Display goes black.

6.5 Warnings

Warnings are issued with an acoustic signal and visually with a symbol on the display. The signal gets louder until the alert stops.

6.5.1 Message

Close door

This message appears if the door is open for too long.

You can set how long it takes for this message to appear .

▶ Stop alarm: Confirm the message.

-or-

▶ Close the door.

Power cut

This message appears if the freezer temperature increased due to a power cut. After the power is restored, the appliance continues to work at the set temperature.

▶ Stop alarm: Confirm the message.
▷ Temperature alert appears (see Temperature alarm) .

Temperature alarm

This message appears if the freezer temperature does not match the set temperature.

Variations in temperature could be because:

- Hot, fresh food was inserted.
- Too much warm room air flowed in when rearranging and removing food.
- The power was cut off for a while.
- The appliance is faulty.

When the fault is eliminated the appliance continues to work at the set temperature.

▶ Confirm the display.
▷ The highest temperature is shown.
▶ Confirm display again.
▷ Status display is shown.
▷ The current temperature is shown.

Error

This message appears if there is a fault with the appliance. An appliance component indicates a fault.

▶ Open the door.
Note down the fault code.
Confirm the message.
The audible signal stops.
The display switches to the Status screen.
Close the door.
Contact Customer Services (see 9.4 Customer Services) .

6.5.2 DemoMode

D appears on the display, demo mode is on. This option is esigned for retailers, as it turns off all the cooling functions.

topping DemoMode

If you see the following running in the display:
Confirm the display within the countdown.
▷ DemoMode is off.
If the timer is not running:
▶ Unplug the appliance.
▶ Plug the appliance in again.
▷ DemoMode is off.

7 Features

7.1 Door rack

7.1.1 Move/remove the door rack

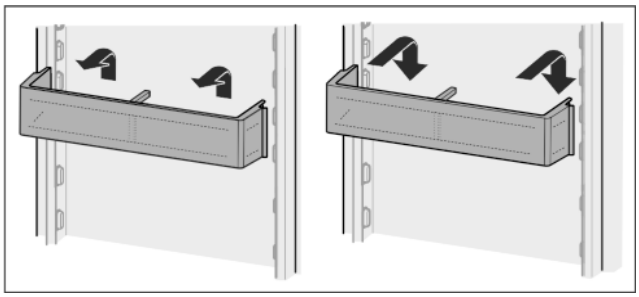

Fig. 12

▶ Remove the rack as per the illustration.

7.1.2 Disassembling the door rack

The door rack can be taken apart for cleaning.

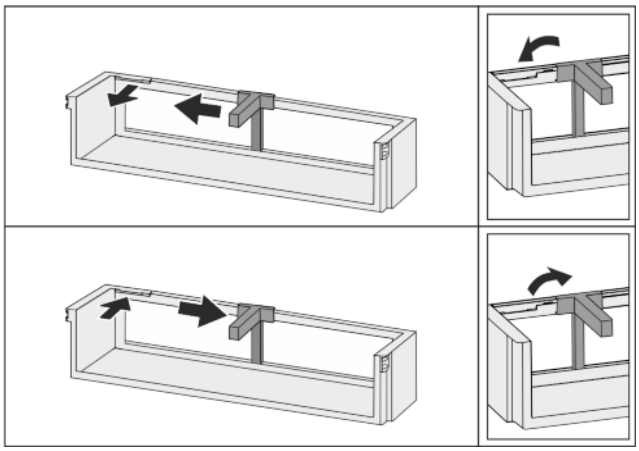

Fig. 13

▶ Disassemble the door rack.

7.2 Shelves

7.2.1 Adjusting/removing the shelves

The shelves are prevented from being pulled out accidentally by pull out stops.

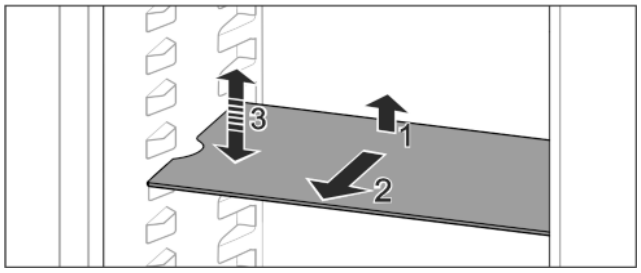

Fig. 14

▶ Lift the shelf and pull forward.
▷ Line up the side runner.
▶ To move a shelf: set to the position you want and slide into place.

-or-

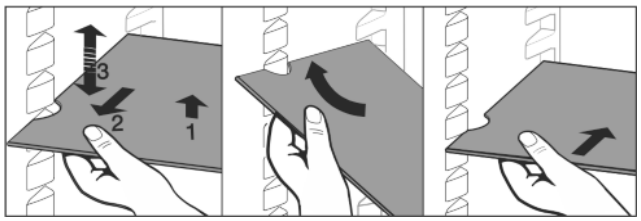

Fig. 15

▶ To remove the shelf completely: pull out towards you.

▶ Easier removal: Set the shelf at an angle.
▶ To replace the shelf: push in all the way.
▷ The pull-out stoppers point downwards.
▷ The pull-out stoppers are behind the front support.

You can also remove the shelf above the EasyFresh compartments.

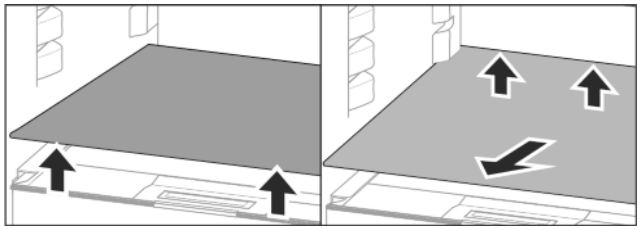

Fig. 16

Removing the shelf:
If the IceMaker water tank is removed:
▶ Lift the shelf at the front and back.
▶ Pull it out towards you.

Do not store any goods on the compartment cover below!

Inserting the shelf:
▶ Place the shelf at an angle, sloping down towards the back.
▷ The pull-out stoppers point downwards.
▶ Slide the shelf into place.

7.2.2 Dismantling the shelves

The shelves can be dismantled for cleaning.

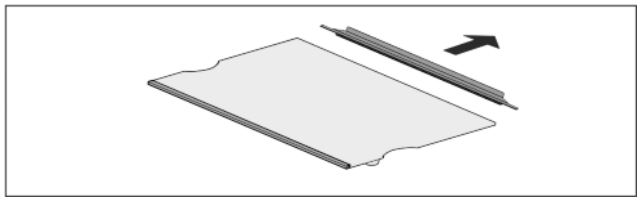

Fig. 17

▶ Dismantling the shelf.

7.3 Dividing shelf*

7.3.1 Using the dividing shelf

The shelves are prevented from being pulled out accidentally by pull out stops.

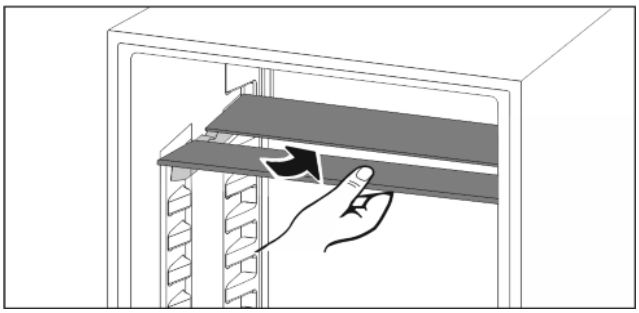

Fig. 18

▶ Push the dividing shelf underneath as shown.

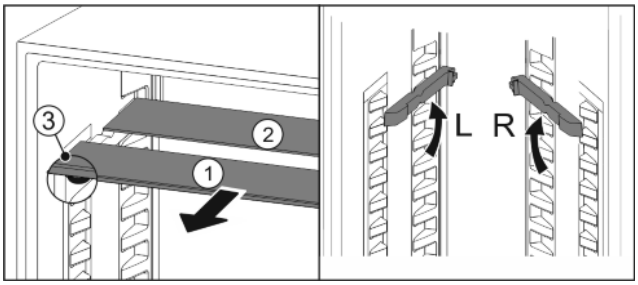

Fig. 19

Adjusting the height:
▶ Pull the glass panels out *Fig. 19 (1)* from the front, one at a time.
▶ Release the support rails and click in at the height you want.
▶ Slide in the glass panels one at a time.
▷ Flat pull-out stoppers at the front, right behind the support rails.
▷ High pull-out stoppers at the back.

Using both shelves:
▶ Lift the top glass plate and pull the bottom glass plate forwards.
▷ Glass panel *Fig. 19 (1)* with pull-out stoppers is at the front.
▷ Stoppers are pointing down *Fig. 19 (3)*.

7.4 VarioSafe*

The VarioSafe provides space for compact foodstuffs and packages, pots and glasses.

7.4.1 Using the VarioSafe

You can remove the drawer and slide it back in at 2 different heights. This is handy for storing taller items in the drawer.

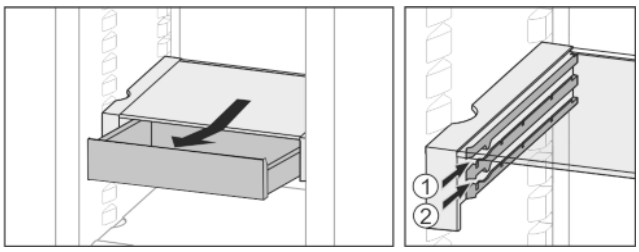

Fig. 20

▶ Remove the drawer.
▶ Slide back at the height you want *Fig. 20 (1)* or *Fig. 20 (2)*.

7.4.2 Repositioning the VarioSafe

You can shift the height of the entire VarioSafe.

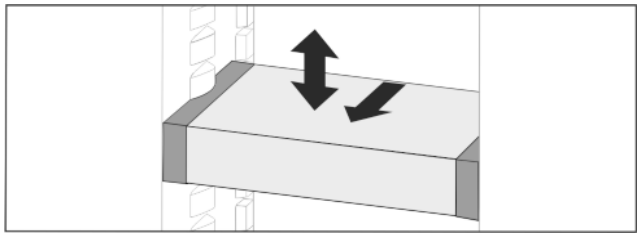

Fig. 21

▶ Pull forwards.
▷ Line up the side runner.
▶ Lift or lower to the height you want.
▶ Slide to the rear.

7.4.3 Removing the entire VarioSafe

You can remove VarioSafe as a whole unit.

▶ Pull forwards.
▷ Line up the side runner.

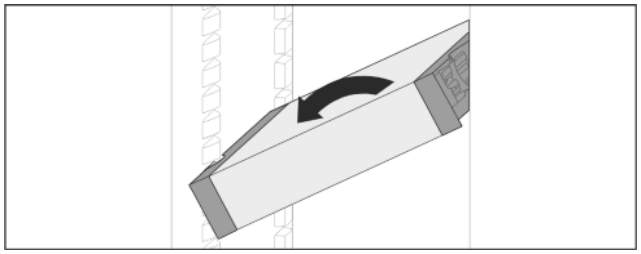

Fig. 22

▶ Tip to the side and pull towards you.

7.4.4 Disassembling the VarioSafe

You can take the VarioSafe apart for cleaning.

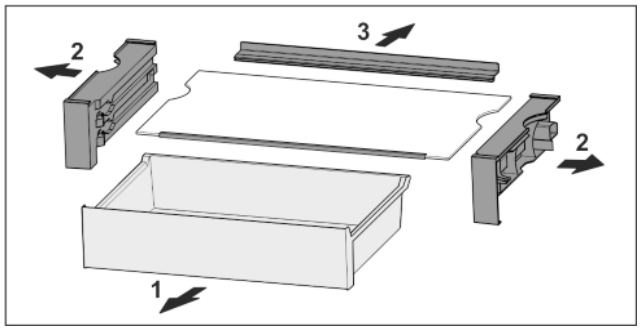

Fig. 23

▶ Disassembling the VarioSafe

7.5 Space for baking tray

There is space for a baking tray *Fig. 1 (7)* above the drawers.

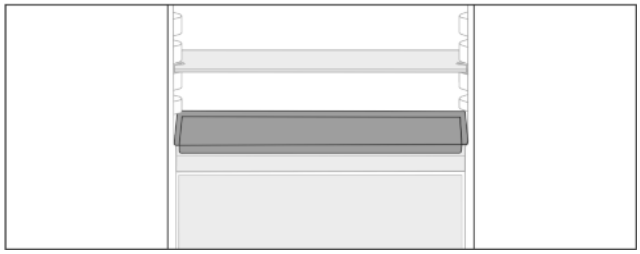

Fig. 24

Ensure that the following conditions are met:

❑ Max. baking tray dimensions are adhered to (see 9.1 Technical specifications) .
❑ Baking tray is cooled to room temperature.
❑ The lowest door rack is set at least one position higher.

With the door open to 90°:

▶ Slide the baking tray onto the lower side runners.

7.6 Drawers

Drawers can be removed for cleaning.

The shelves below can be used for storage until the drawers are replaced.

The way to remove/insert the drawers varies depending on the pull-out system. Your appliance can include various pull-out systems.

7.6.1 Removing the drawer

For appliances with NoFrost:*

Note
The energy consumption increases and the cooling power goes down if ventilation is not sufficient.*

▶ Leave the bottom drawer in the appliance!*
▶ Always leave the fan air vents clear on the back wall!*

For appliances without NoFrost:*

Note
The energy consumption increases and the cooling power goes down if ventilation is not sufficient.*

▶ Always leave the fan air vents clear on the back wall!*

Drawer without a pull-out system

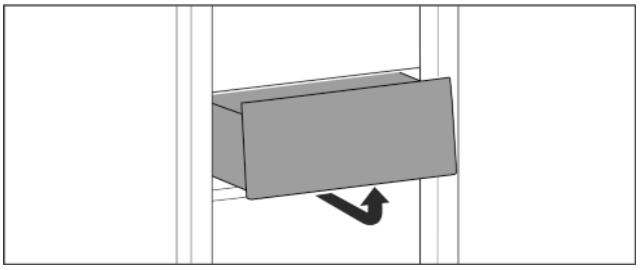

Fig. 25

▶ Remove the drawer as shown in the illustration.

Drawer on rails

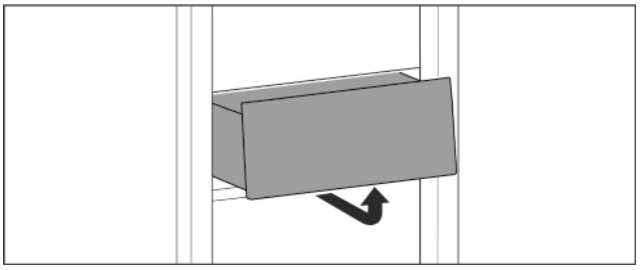

Fig. 26

▶ Remove the drawer as shown in the illustration.

7.6.2 Inserting the drawer

Drawer without a pull-out system

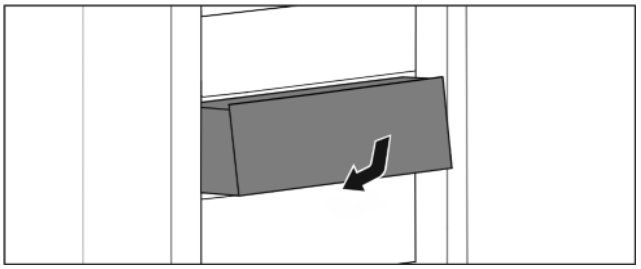

Fig. 27

▶ Insert the drawer as shown.

Drawer on rails

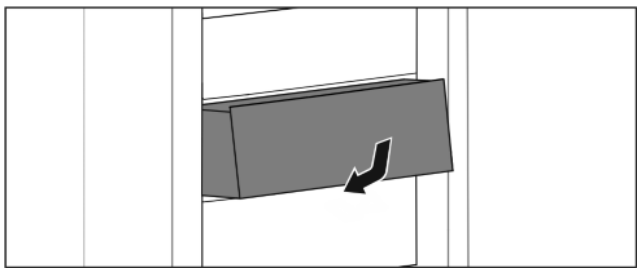

Fig. 28

▶ Insert the drawer as shown.

7.7 EasyFresh-Safe cover

You can remove the compartment cover for cleaning.

7.7.1 Removing the compartment cover

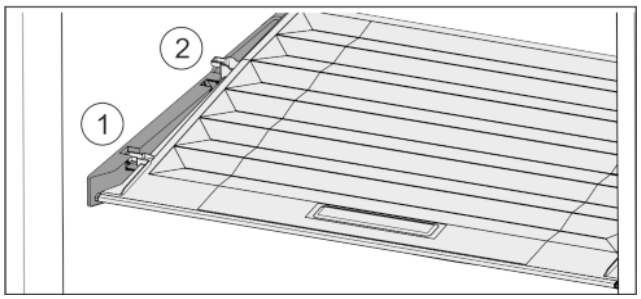

Fig. 29

When the drawers are removed:

▶ Pull the lid up at the front to the opening in the retaining parts *Fig. 29 (1)*.

▶ Lift from the back and pull it up and out *Fig. 29 (2)*.

7.7.2 Inserting the compartment cover

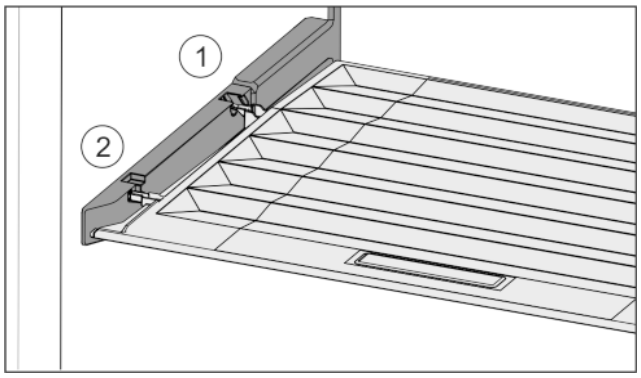

Fig. 30

▶ Insert the lip of the cover over the opening of the rear bracket *Fig. 30 (1)* and click into place *Fig. 30 (2)*.

▶ Position the cover where you want it (see 7.8 Adjusting the moisture levels) .

7.8 Adjusting the moisture levels

You can adjust the moisture in the drawer yourself by adjusting the compartment cover.

The compartment lid is attached to the drawer and can be hidden by a shelf or additional drawers.

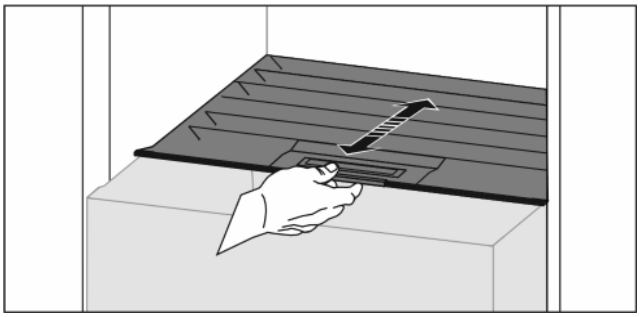

Fig. 31

Low air humidity

▶ Open the drawer.

▶ Slide the compartment cover forwards.

▷ With the drawer closed: Gap between the cover and the compartment.

▷ The air moisture in the Safe decreases.

High air moisture

▶ Open the drawer.

▶ Slide the cover back.

▷ With the drawer closed: The cover seals the compartment.

▷ The air moisture in the Safe increases.

If there is too much moisture in the compartment:

▶ Choose the setting “low air moisture”.

-or-

▶ Remove any excess moisture with a cloth.

7.9 IceMaker*

The IceMaker produces ice cubes with the water tank in the fridge section. The water tank can also be used to provide cooled drinking water.

The IceMaker will produce ice cubes for household use only.

Ensure that the following conditions are met:

- IceMaker is cleaned (see 8 Maintenance) .
- The water tank is clean (see 8 Maintenance) .
- IceMaker drawer is fully inserted.

7.9.1 Fill the water tank

WARNING

Unclean water!

Contaminants.

▶ Only fill with drinking water.

▶ The IceMaker is off: empty water tank.

▶ The IceMaker is no longer in use: empty water tank.

NOTICE

Sugar-content liquids!

Damage to IceMaker.

▶ Only fill with cold drinking water.

Note

Using filtered, decarbonised water ensures the best-tasting drinking water for your ice cubes.

This water quality can be achieved using a table water filter of the kind available in trade retail outlets.

▶ Always fill the water tank only with filtered, decarbonised drinking water.

The IceMaker is supplied with water from the water tank (see 1 Appliance at a glance) .

If the water tank is empty, the following reminder appears on the display Water Refill (see 6.5 Warnings) .

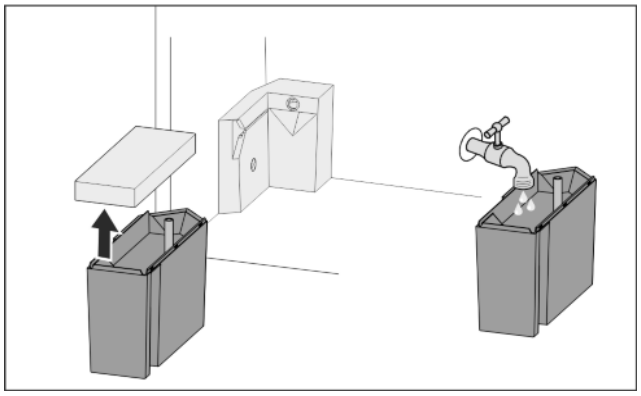

Fig. 32

- ▶ Pull the water tank towards you and out.
- ▶ Remove the lid.
- ▶ Fill with drinking water.
- ▶ Put the lid on.
- ▶ Insert the water tank into the brackets and slide in all the way.

7.9.2 Producing ice cubes

The volume depends on the freezing temperature. The colder the temperature, the more ice cubes the system can produce in a certain time period.

After the IceMaker is turned on for the first time, it can take up to 24 hours for the first ice cubes to be made.

- ▶ Activate the IceMaker function (see 6.2 Control concept) .
- ▶ To make a high number of ice cubes: Activate the MaxIce function (see 6.2 Control concept) .
- ▶ To make a high number of ice cubes: Move the divider in the IceMaker drawer or remove it completely.*
- ▶ Distribute the ice cubes evenly in the drawer to increase the capacity.
- ▶ Closing the drawer: IceMaker starts making ice cubes again automatically.

Note
When a certain level is reached in the IceMaker drawer, it stops producing ice cubes. The IceMaker does not fill the drawer all the way to the top.

7.10 VarioSpace

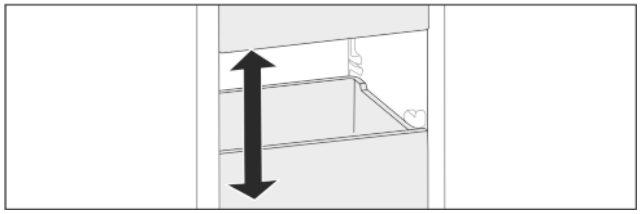

Fig. 33

You can remove the glass panels as well as the drawers. This leaves more room for larger food items such as poultry, meat, large game and tall baked goods. These can be frozen whole before further preparation.

- ▶ Do not exceed the load capacity of the glass panels (see 9.1 Technical specifications) .

7.11 Accessories

7.11.1 Bottle holder

Using the bottle holder

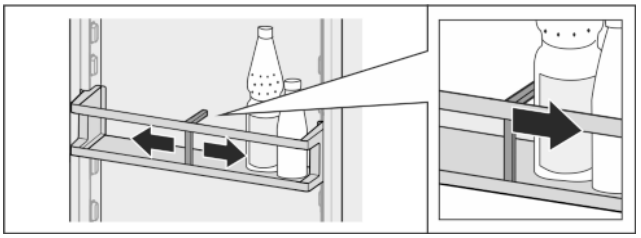

Fig. 34

- ▶ Push the bottle holder onto the bottles.
- ▷ The bottles are prevented from falling over.

Removing the bottle holder

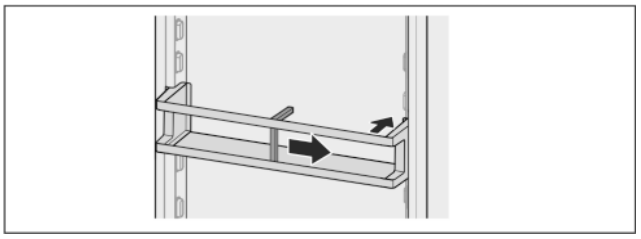

Fig. 35

- ▶ Move the bottle holder all the way to the right.
- ▶ Push the bottle holder to the back to remove.

8 Maintenance

8.1 FreshAir carbon filter

The FreshAir carbon filter is in the compartment above the fan.

It guarantees the best air quality.

- ❑ Replace the carbon filter every 6 months.
  With the *Reminder* setting on, a message on the display prompts you to replace it.
- ❑ The carbon filter can be disposed of with the regular household waste.

Note
You can purchase the FreshAir carbon filter from the Liebherr household appliance store (home.liebherr.com).

8.1.1 Removing the FreshAir carbon filter

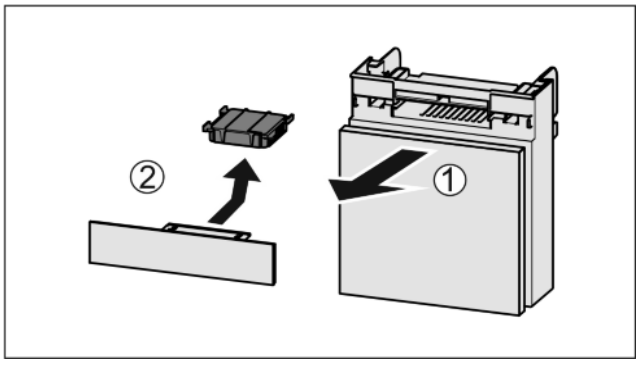

Fig. 36

- ▶ Pull out the compartment *Fig. 36 (1)*.
- ▶ Remove the carbon filter *Fig. 36 (2)*.

8.1.2 Inserting the FreshAir carbon filter

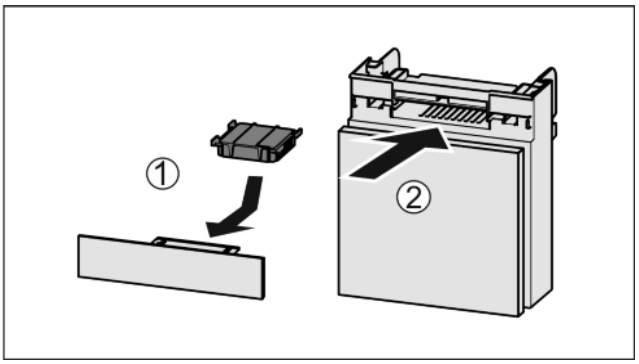

Fig. 37

▶ Insert the carbon filter as shown in the diagram *Fig. 37 (1)*.
▷ The carbon filter clicks into place.
If the carbon filter is pointing downwards:
▶ Push the compartment in *Fig. 37 (2)*.
▷ The carbon filter is now ready for use.

8.2 Defrosting the appliance

WARNING
Improper defrosting of the appliance!
Injuries and damage.
▶ Never use mechanical aids or other means that have not been recommended by the manufacturer, to speed up the defrosting process.
▶ Do not use electrical heating or steam-cleaning appliances, naked flames or defroster sprays to defrost.
▶ Do not use sharp objects to remove ice.
▶ Do not damage the pipework in the cooling circuit.

8.2.1 Defrosting the fridge section

Defrosting is automatic. The thawing water drains through the outlet and evaporates.

Water drops or a thin layer of frost or ice can form on the back wall; this is a completely normal part of the appliance's function. This must not be removed.

As the appliance regulates its energy efficiency, a layer of frost or ice can also form.*

As the appliance regulates its energy efficiency, a layer of frost or ice can also form.*
▶ Clean the outflow opening regularly (see 8.3 Cleaning the appliance) .

8.2.2 Defrost freezer section using the NoFrost option*

Defrosting happens automatically via the NoFrost system. The moisture is deposited on the evaporator, is periodically defrosted and evaporates.

The appliance does not need to be defrosted.

8.2.3 Defrost the freezer section manually*

After prolonged use, a layer of frost or ice can form.

The following factors promote the formation of frost or ice:

- Appliance is frequently opened.
- Hot food was put in.

One day before defrosting:
▶ Activate SuperFrost (see 6.3 Functions) .
▷ Frozen goods maintain a "cold reserve".
▶ Turn off the appliance (see 6.4 Settings) .
▶ Pull out the power plug or switch off the fuse.
▶ Wrap the frozen produce in newspaper or blankets and store in a cool place.
▶ Place a pan of hot, non-boiling water on the middle shelf.

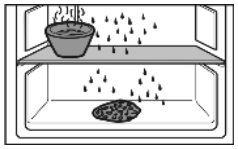

▷ This speeds up the defrosting process.
▶ Leave the appliance door open during defrosting.
▶ Remove detached pieces of ice.
▶ Make sure that there is no thaw water in the cabinet.
▶ Keep absorbing the thawed water with a sponge or cloth.
▶ Clean the appliance (see 8.3 Cleaning the appliance) .

8.3 Cleaning the appliance

8.3.1 Ready

WARNING
Danger of electric shock!
▶ Remove the refrigerator connector or interrupt the power supply.

WARNING
Risk of fire
▶ Do not damage the refrigeration circuit.

▶ Empty the appliance.
▶ Remove mains connector.*

8.3.2 Cleaning the interior

NOTICE
Improper cleaning!
Damage to the appliance.
▶ Only use soft cleaning cloths and ph-neutral all-purpose cleaners.

▶ Plastic surfaces: clean by hand with a soft clean cloth, lukewarm water and a little detergent.
▶ Metal surfaces: clean by hand with a soft clean cloth, lukewarm water and a little detergent.
▶ Drain outlet *Fig. 1 (9)*: remove any deposits with a thin item such as a cotton bud.

8.3.3 Clean the components

NOTICE
Improper cleaning!
Damage to the appliance.
▶ Only use soft cleaning cloths and ph-neutral all-purpose cleaners.

Clean with a soft, clean cloth, lukewarm water and some detergent:

- Door rack
- Shelf
- Dividing shelf*
- VarioSafe*
- EasyFresh-Safe cover
- Drawer

Wash in the dishwasher up to 60°C:

- Bottle rack
- Holder of the dividing shelf
- IceMaker water tank and water tank lid*

▶ To disassemble components: see the relevant section.
▶ Clean the components.

8.3.4 Cleaning the IceMaker*

There are various options for cleaning the IceMaker.

Cleaning is required in the following cases:

❑ Initial operation
❑ If out of use for more than 48 hours.

Ensure that the following conditions are met:

❑ Water tank is cleaned and full.
❑ IceMaker drawer is emptied.
❑ IceMaker drawer is in place.
❑ IceMaker is on (see 6.2 Control concept) .

First use or after a long period of non-use

Clean the IceMaker with the TubeClean function.

▶ Place a 1.5 l empty container (max. height 10 cm) into the drawer under the IceMaker.
▶ Activate the TubeClean function (see 6.2 Control concept) .
▷ The rinse process is ready (max. 60 Min.): Symbol flashes.
▷ Water pipes are rinsed: Symbol flashes.
▷ Rinsing process is complete: Function turns off automatically.
▶ Remove the IceMaker drawer and remove the container.
▶ Clean the IceMaker drawer with warm water and a little detergent.
▶ Push the IceMaker drawer in.
▷ The system starts making ice cubes automatically.
▶ Dispose of any ice cubes that were made 24 hours after the first ice cubes.

If cleaning is required

Clean the IceMaker by hand.

▶ Remove the IceMaker drawer and clean with warm water and a little detergent.
▶ Push the IceMaker drawer in.
▷ The system starts making ice cubes automatically.

8.3.5 After cleaning

▶ Wipe the appliance and the components dry.
▶ Connect and switch on the appliance.
▶ Activate SuperFrost (see 6.3 Functions) .
The temperature is cold enough:
▶ Place the food inside.
▶ Repeat cleaning regularly.

9 Customer help

9.1 Technical specifications

Temperature range	
Cooling	2 °C to 9 °C
Freeze	-26 °C to -15 °C

Maximum freezer quantity / 24 hrs	
Freezer compartment	See the type plate under “Freezer goods … /24 hours”

Maximum component capacity			
Features	Appliance width 55 cm (see Installation Guide, Appliance Dimensions)	Appliance width 60 cm (see Installation Instructions, Appliance Dimensions)	Appliance width 70 cm (see Installation Guide, Appliance Dimensions)
Drawer Freezer compartment	12 kg	12 kg	
Glass shelf in the freezer section	35 kg	35 kg	55 kg

Maximum size baking tray	
Width	466 mm
Depth	386 mm
Height	50 mm

Ice cube production*	
Ice cube production / 24 h	At a temperature of -18 °C: 1.2 kg of ice cubes
Maximum ice cube production / 24 hours	With the MaxIce function on: 1.5 kg of ice cubes

Lighting	
Class[1]	Light source
This product contains a light source that meets energy efficiency rating F	LED

1 The appliance may contain light sources with different energy efficiency classes. The lowest class is given here.

9.2 Operating noises

The appliance makes different noises when it is on.

- At **higher temperatures** the appliance uses less energy but works for longer. It is **quieter**.
- At **lower temperatures** the food is cooled faster. It is **louder**.

Examples:

- Functions on (see 6.3 Functions)
- Fan running
- Food recently added
- High ambient temperature
- Door open for a while

Noise	Possible cause	Type of noise
Bubbling and splashing	Coolant flowing into the cooling circuit.	Normal operating noise
Hissing	Coolant sprays into the cooling circuit.	Normal operating noise
Humming	The appliance is cooling. The volume depends on the cooling output.	Normal operating noise

Noise	Possible cause	Type of noise
Suction noises	Soft-closing door is being opened and closed.	Normal operating noise
Humming and rustling	The fan is running.	Normal operating noise
Clicking	Components turning on and off	Normal switching noise
Rattling or humming	Valves or flaps are working. The water tank pump is on.*	Normal switching noise

Noise	Possible cause	Type of noise	Lifting
Vibration	Improper installation.	Defective noise	Check the installation. Level the appliance.

Noise	Possible cause	Type of noise	Lifting
Rattling	Components, items inside the appliance	Defective noise	Secure components. Leave enough space between the items.

9.3 Technical fault

Your appliance is designed and built to ensure it works reliably and has a long service life. In the unlikely event that a fault occurs during operation, please check whether it is due to an operating error. If so, you will be charged for the callout and repair costs even if it falls within the warranty period.

You can fix the following faults yourself.

9.3.1 Appliance function

Defect	Cause	Remedy
The appliance is not working.	→ The appliance is not switched on.	▶ Switch the appliance on.
	→ The power plug is not properly plugged into the socket.	▶ Check the power plug.
	→ There is something wrong with the power outlet fuse.	▶ Check the fuse.
	→ Power cut	▶ Keep the appliance closed. ▶ Protecting food: Lay freezer packs on top of the food or use another freezer if the power is off for a prolonged period. ▶ Do not re-freeze defrosted food,
	→ The appliance plug does not fit the appliance properly.	▶ Check the appliance plug.
Temperature is not cold enough.	→ The appliance door is not closed properly.	▶ Close the appliance door.
	→ Not enough ventilation.	▶ Keep ventilation grille clear, and clean it.
	→ The ambient temperature is too high.	▶ Solution: (see 1.3 Appliance range of use) .
	→ The appliance was opened too many times or for too long.	▶ Wait to see if the required temperature corrects itself. If not, contact Customer Service (see 9.4 Customer Services) .
	→ Too much fresh food was placed inside without SuperFrost.	▶ Solution: (see SuperFrost)
	→ The appliance is too close to a heat source (oven, radiator, etc).	▶ Move the appliance or the heat source.
	→ The appliance was not correctly installed in the recess.	▶ Check if the appliance was installed correctly and that the door closes properly.
The door seal is defective or needs to be replaced for another reason.	→ The door seal can be replaced. It can be replaced without the need for special tools.	▶ Contact Customer Services (see 9.4 Customer Services) .
The appliance builds up too much ice or condensation.	→ The door seal may have slipped out of its groove.	▶ Check that the door seal is well fitted in the groove.

* Depending on model and options

9.3.2 Features

Defect	Cause	Remedy
The IceMaker is not producing ice cubes.*	→ The IceMaker is not on.	▶ Activate the IceMaker.
	→ The drawer of the IceMakers is not connected properly.	▶ Push the drawer in correctly.
	→ The water tank is not pushed in properly.	▶ Push the water tank in.
	→ There is not enough water in the water tank.	▶ Fill the water tank.
The internal light does not come on.	→ The appliance is not switched on.	▶ Switch the appliance on.
	→ The door was open for longer than 15 minutes.	▶ Interior lighting turns off automatically after approx. 15 min. with the door open.
	→ The LED light is faulty or the cover is damaged:	**WARNING** Risk of injury due to electric shock! There are live electrical parts under the cover. ▶ Only ever have the inside LED light replaced or repaired by customer service or trained personnel. **WARNING** Risk of injury from LED bulb! The light intensity of the LED light corresponds to hazard group RG 2. If the cover is defective: ▶ Do not look directly into the light from close range. It cause injury to the eyes.

9.4 Customer Services

First check if you can fix the error yourself (see 9 Customer help) . If you can't, contact Customer Services.

Please refer to the enclosed “Liebherr-Service” brochure for the address.

WARNING
Risk of injury if repair work is not carried out professionally!
▶ Have any repairs and action - not expressly specified - on the appliance and mains cable carried out by service personnel only. (see 8 Maintenance)

9.4.1 Contact Customer Services

Make sure you have the following appliance data at the ready:

❑ Appliance name (model and index)
❑ Service no. (Service)
❑ Serial no. (S no.)

▶ Look up the appliance information on the display (see Info) .
-or-
▶ Referring to appliance info on the nameplate (see 9.5 Model plate) .

▶ Note down the appliance information.
▶ Notify Customer Services of the following: Give us the appliance data.
▷ This will help us to provide you with a faster, more accurate service.
▶ Follow any further instructions given by Customer Services.

9.5 Model plate

The model plate is behind the drawers on the inside of the appliance.

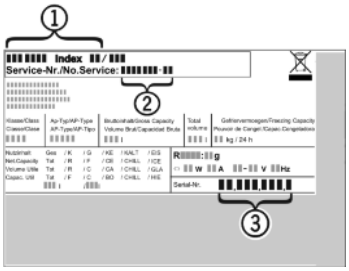

Fig. 38

(1) Appliance description **(3)** Serial no.
(2) Service no.

▶ Note the data on the model plate.

10 Shutting down

▶ Empty the appliance.
▶ Turn off the IceMaker (see 6.3.9.2 Deactivating the function) .*
▶ Turn off the appliance (see 6.4 Settings) .
▶ Remove mains connector.
▶ Remove appliance connector if required: Remove and move from left to right at the same time.
▶ Clean the appliance (see 8.3 Cleaning the appliance) .
▶ Leave the door open to avoid bad smells building up.

11 Disposing of the appliance



The appliance contains some reusable materials and should be disposed of properly - not simply with unsorted household refuse. Appliances which are no longer needed must be disposed of in a professional and appropriate way, in accordance with the current local regulations and laws.

Do not damage the refrigeration circuit of the old appliance during removal to prevent the refrigerant contained (information on the type plate (see 9.5 Model plate)) and the oil from escaping in an uncontrolled manner.

For Germany:

The appliance can be disposed of free of charge in Class 1 collection containers at your local recycling centre. When purchasing a new fridge/freezer and if your sales area is > 400 m^2, the retailer with also take back the old appliance free of charge.

Decommission the appliance:

- ▶ Pull out the plug.
- ▶ Remove the connection cable from the appliance.



home.liebherr.com/fridge-manuals

EN Integrated fridge/freezer
ORIGINAL OPERATOR'S MANUAL

Issue date: 20210616
Part number index: 7088256-00

NOT DEFINED