Detailed instruction manual

For details on how to use this appliance, please scan the QR code on your mobile device or visit www.grundig.com

Table of Contents

2 EU directives
3 About your TV set
3 Intended use
3 Safety
4 Environmental information
5 Packing contents
6 Setting up or hanging
7 Connections
7 Buttons of the remote control
8 Inserting batteries into the remote control
8 Initial setup and setting the TV
8 Adding new TV channels at a later point
8 Selecting a signal source
8 Selecting a channel from the channel list
9 Remote control
10 Favorite List
10 Swap function
10 HbbTV
10 Enabling HbbTV
11 Recording from digital TV channels
11 Watching TV with time shift
12 Media player
12 Applications
13 Additional information
14 Licenses
14 Cleaning the TV set
14 Abbreviations

EU directives

This product complies with the following EU directives:

2014/53/EU, 2014/30/EC, 2014/35/EC, 2009/125/ EC, 2017/1369/EU, 2011/65/EU.

To obtain a copy of declaration of compliance (DoC):

please visit http://www.grundig.com/download/doc. You can access the declaration of compliance by typing model number of your television indicated on the cover page of the instruction manual into the field where it says "Enter model number".

This appliance can be used observing the legal regulations in the European countries below.

AT, BE, BG, CH, CY, CZ, DE, DK, EE, ES, FI, FR, GB, GR, HU, IE, IS, IT, LI, LT, LU, LV, MT, NL, NO, PL, PT, RO, SE, SI, SK, HR, TR.

5150 -5350 MHz band can be used indoors only. (For Wi-Fi/Bluetooth integrated model or Wi-Fi integrated model).

This device can also be operated in the countries outside Europe.

About your TV set

- In addition to ATV broadcasts, you can also watch digital TV programs through DVB-S, DVB-T and DVB-C.
- Many features of the TV set require an Internet connection. The TV set is equipped with WLAN and a LAN port.
- This television can record programs. To use this feature, you must have a storage device that can be connected via a USB, such as an external hard disk (not provided with the product). The recorded programs can only be watched on the TV on which the recording has been performed. If the TV has been repaired, the previously saved programs may not be watched anymore.

Intended use

- The TV set is designed for use in dry rooms.
- Use the TV set with the supplied stand or a suitable VESA bracket.
- The TV set is primarily intended for the playback of TV programs, streaming content and music/video material from external devices. Any other use is strictly prohibited.

  It is not intended as an information display or for predominant use as a computer monitor. If a still image or a non-full-format image is displayed for an extended period, visible traces may remain on the screen for some time.

  This is not a defect that can be used as the basis for a warranty claim.

Transporting the product

Unplug the product before transportation. Disconnect antenna cable and other external devices connected to the TV set. If you have kept the original product box, use it to pack the product. If you have not kept the original product box, wrap the product in bubble wrap or a thick cardboard. Pay attention to avoid damages during transportation.

Safety

⚠ WARNING

Risk of electrical accident

IMPORTANT SAFETY INSTRUCTIONS - KEEP INSTRUCTIONS FOR FUTURE REFERENCE

Immediately followed by:Read all safety warnings, instructions, illustrations and specifications provided with this appliance.

- Standby LED is off while mains plug is disconnected. If Standby LED is lit then it means that your product is connected to mains.
- Do not open the TV set. Safety risk may arise and also the guarantee of the product can be void if the television set is opened.
- The TV set can only be operated with the power cable or the AC/DC adapter supplied with the product.
- Do not operate the TV set with a damaged power cable/AC/DC adaptor (if supplied).
- If the plug on the TV set has an earthing contact, only insert the plug into a socket with an earthing contact.
- Plug the TV set into the mains socket only after you have connected the external devices and the antenna.
- Protect the TV set from moisture. Do not place any vessels filled with water (such as vases) on the TV.

Fire hazard

- 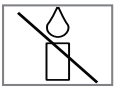
  To prevent the spread of fire, keep candles or other open flames away from this product at all times.
- Do not cover the ventilation slots on the TV set.
- Always unplug the power plug and antenna plug during a thunderstorm.
- Keep candles or other open flames away from the TV set.
- Do not expose the batteries to extreme heat such as sunshine, fire or the like.

- Only use batteries of the same type (brand, size, properties). Do not use used and new batteries together.

⚠ WARNING

Injuries caused by falling TV set

Never place the TV set on an unstable surface. The TV set may fall, causing serious injury, possibly leading to death in isolated cases. Observe the following precautions especially to protect the children from such negative incidents:

- Only use furniture that can safely support the TV set.
- Make sure that the TV set does not protrude beyond the dimensions of the furniture on which it is resting.
- Do not place the TV set on tall furniture that has the risk of tipping over such as cabinets, sideboards or bookcases. If you have no other choice, fix the furniture and the TV set to the wall to prevent them from tipping over.
- Do not place the TV set on fabric or other materials located between the TV set and furniture.
- Consider the above mentioned warnings whenever you change the location of the TV set.

CAUTION

Shortened service life due to high operating temperature

- Do not place the TV set next to heating units or in direct sunlight.
- To ensure adequate ventilation, maintain clearance of at least 10 cm around the TV set.

Child safety

- The packaging materials are dangerous for children. Keep the packaging materials out of the reach of children.
- Instruct children that there is danger associated with climbing on furniture when the TV set is to be reached.
- Keep flat batteries out of the reach of children and deliver them to a waste collection point.

Discoloration of furniture due to rubber feet

- Some furniture surfaces may discolor when they come in contact with rubber. To protect furniture, you can place a sheet made of glass or plastic under the stand. Do not use textile underlays or mats such as doilies.

Environmental information

- 

Do not dispose of batteries in the household waste. Used batteries must be returned to retail stores or public collection points. You help protect the environment in this way.
- 
Do not dispose of the product along with normal household waste at the end of its service life. Take it to a recycling center for electrical and electronic equipment.

Disposing the packaging

- Be sure to dispose of packaging materials for your product separately according to the guidelines of local authorities so that they can be recycled in an environmentally safe manner.

Electromagnetic interference

- Devices connected to the product (satellite receiver, DVD player, and etc.) or signal emitting devices (router and etc.) close to the product may cause disturbance in the image and noise in the sound.
- Connection cables used on the product must be shorter than 3 m.
- If the product cannot perform its function due to electrostatic discharge, the user may need to switch off and then switch on the product.
- A shielded, HDMI-certified and ferrite cable must be used with the product.

Packing contents

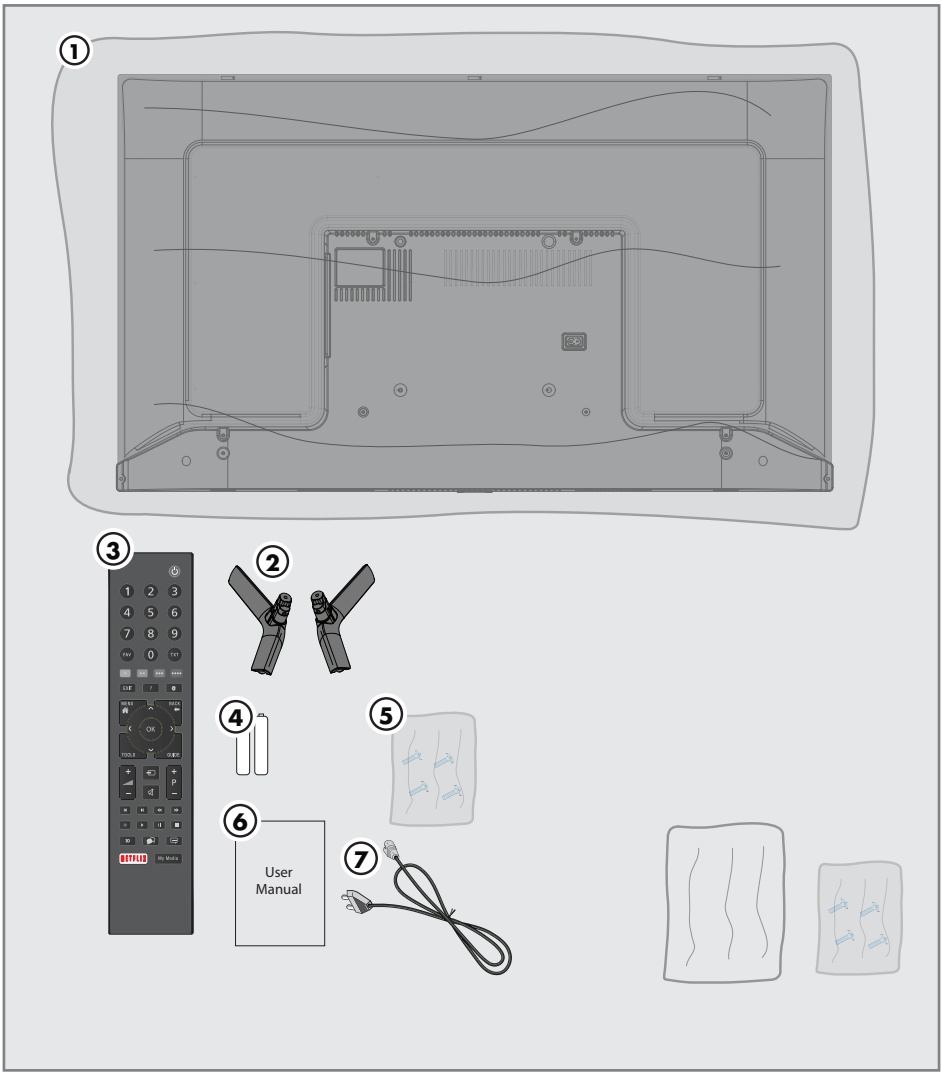

Standard accessories

1. TV
2. Stand
3. Remote control
4. Battery for remote control
5. Screws and mounting instructions for stand
6. Quick Instruction Manual
7. Power cord

Optional accessories

Cleaning cloth

Wall hanging screws

Setting up or hanging

- Select a location so that no direct sunlight falls on the screen.

Setting up with stand

- To mount the stand, refer to the installation instructions included.
- Place the TV set on a hard, level surface.

Preparing for mounting on the VESA installation kit

Contact authorized dealer to purchase the installation kit.

You will need:

- A pair of scissors,
- A cross-tip screwdriver.

Follow the installation instructions for the VESA installation kit.

1. Place the TV set in the film on a smooth surface with the screen facing down.
2. Cut open the film on the back side using the scissors.
3. Connect the required cables to the connectors of television. See the "Connections" section in this manual.
4. Tie the cables so they do not hang down onto the floor.
5. Screw the VESA installation kit onto the TV set and mount it according to its installation instructions.

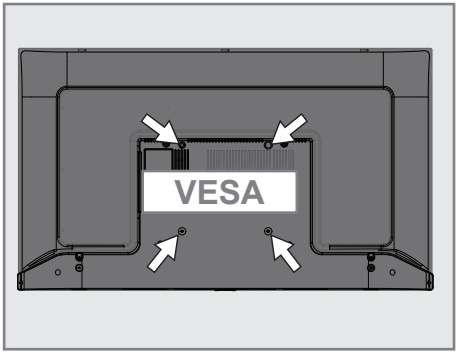

Connections

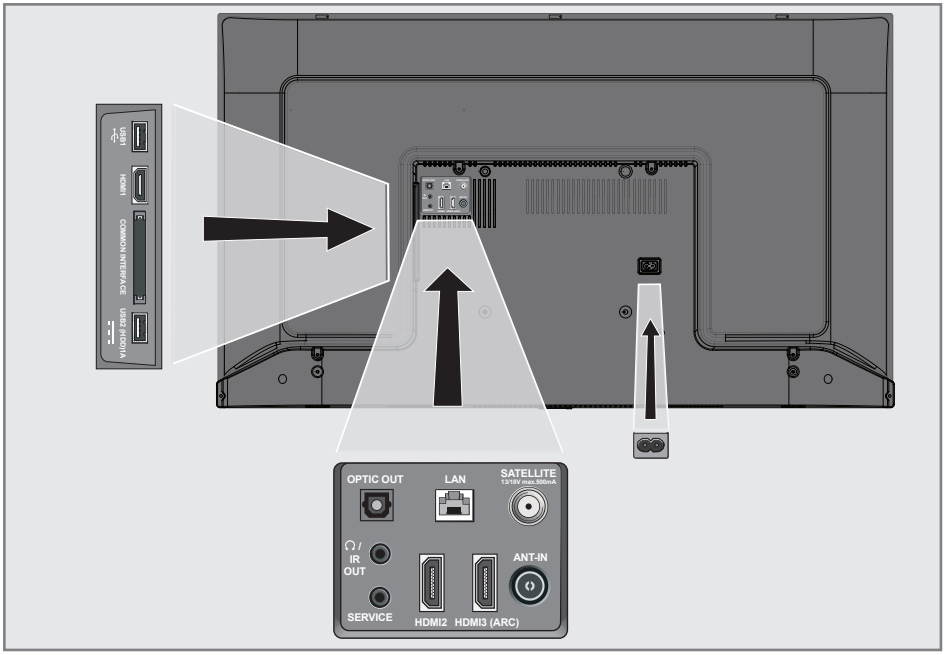

- **USB 1:** For data media and keyboard.
- **HDMI1:** Input for digital audio and image data.
- **CI:** For CA modules for receiving scramble channels.
- **USB2 (HDD):** Data media such as an external hard disk to record programs will be connected here.
- **Optic Out:** optical audio output.
- **/IR OUT:** External audio output or headphone jack with adapter.
  IR Out is not available on this product.
- **SERVICE:** Service only.
- **LAN:** Network connection.
- **HDMI2:** Input for digital audio and image data.
- **HDMI3 (ARC):** Input for digital audio and image data.
- **SATELLITE:** Input for satellite antenna signal. Suitable for single-cable SCR system.
- **ANT IN:** For antenna cable (terrestrial antenna or cable connection).
- **AC IN:** Power cord input.

Buttons of the remote control

Turning on the television and switching it to standby mode

1. Press ⏻/**I** to turn on the television in the stand-by mode.
2. Press ⏻/**I** to switch the television to the stand-by mode.

Inserting batteries into the remote control

1. Open the battery compartment.
2. Insert batteries as marked on the bottom of the battery compartment (2 × Micro/R03/AAA).
3. Close the battery compartment.

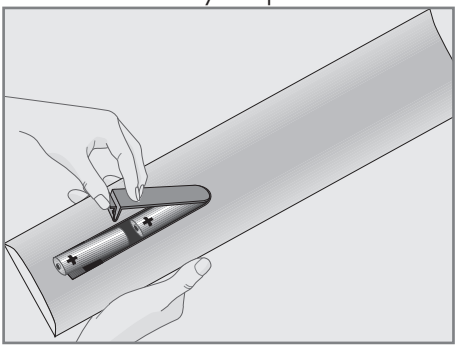

Initial setup and setting the TV

1. Connect the antenna and external device cables.
2. Insert the power plug into the socket.
3. Switch on the TV set with ⏻ on the remote control.
4. Follow the setup wizard on the screen.

Adding new TV channels at a later point

1. Press [⏎] to select the antenna source you wish to search.
2. Select the source and press (OK) to confirm.
3. Press [MENU].
4. Select »Channel«.
5. Select »Automatic Channel Search«.
6. The current source type is enabled. Press (OK) to confirm.
7. The next procedure depends on the selected antenna. Follow the instructions on the screen.

Selecting a signal source

1. Press [⏎].
2. Press ❮ or ❯ to select the signal source and press (OK) to confirm.

Selecting a channel from the channel list

1. Press (OK).
2. Press ❯ or ❮ to select the channel and press (OK) to confirm.

Remote control

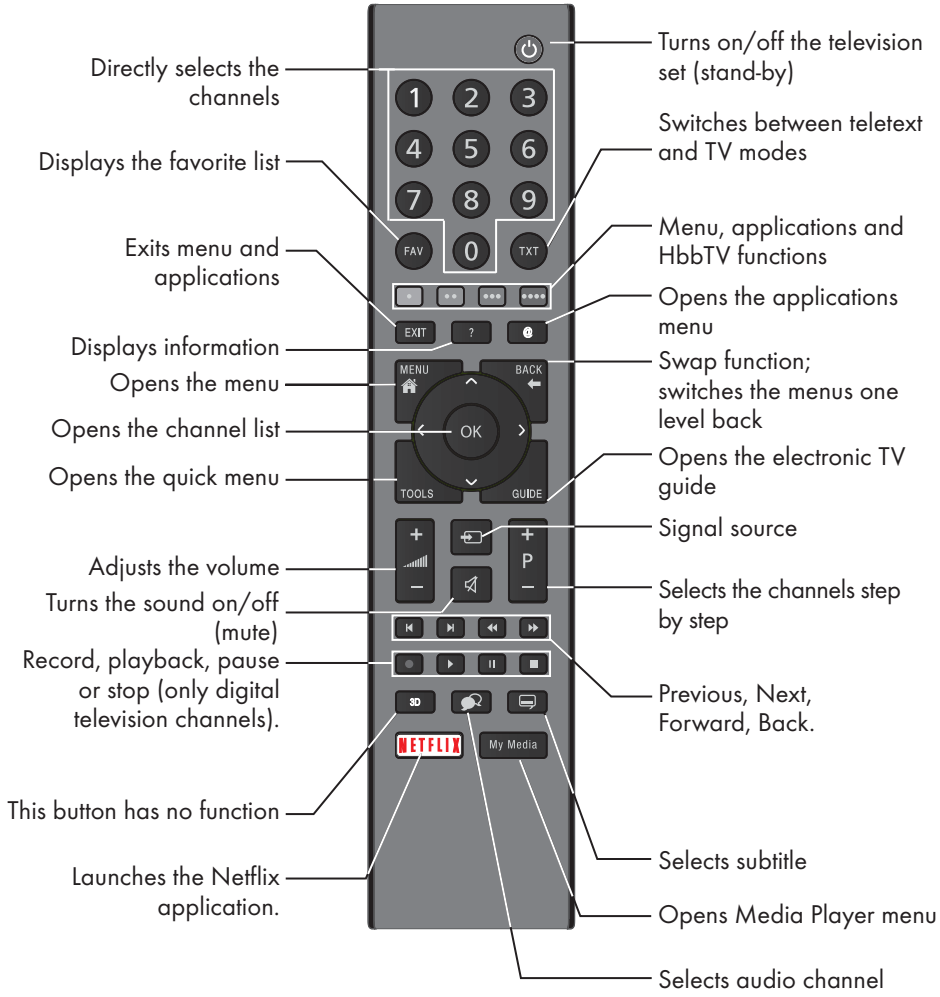

Cursor Control



Moves the cursor up and down in the menus.

Moves the cursor left/right in menus.

Opens channel list; activates various functions.

Favorite List

You can add TV and radio channels to your favorite lists.

Adding a channel to your favorite list

1. Press MENU.
2. Select »Channel«.
3. Select »Program Edit«.
4. Select the channel you wish to add to your favorites and press ••• (yellow).

Selecting a channel from the favorite list

1. Press FAV.
   – Favorite list will be displayed.
2. Press ∨ or ∧ to select the channel and press OK to confirm.

Swap function

This function allows you to switch between the channel you are watching and the channel you watched last.

1. Select a channel, e.g. PR1
2. Go to another channel, e.g. PR11
3. Press BACK to return to PR1.

HbbTV

HbbTV is a new technology where broadcast and the broadband can be used together and which permits access to interactive applications that the broadcast provides through internet.

For a full HbbTV functionality, the TV must be connected to internet.

When you open a TV channel with the HbbTV feature, a relevant message will be displayed.

1. Press the colorful key that appears after you've opened the TV channel to enable the HbbTV function.

Enabling HbbTV

1. Press MENU.
2. Press ∨ or ∧ to select »SETUP« and press > to confirm.
3. Press ∨ or ∧ to select »HBBTV« and press »**OK**« to confirm.
4. Press ∨ or ∧ to select »On«.

Recording from digital TV channels

TV programs can be recorded and played only through an external data medium (a hard disk or a USB memory).

Note

- Recording can only be done on USB memory sticks and hard disks with FAT and FAT32 format.
- If the product cannot be recovered in the data playing/sharing/recording mode due to electrostatic discharge, user intervention will be required.

Direct recording

1. Press ● to record the program that is running.
2. Press ■ to stop recording.

Scheduling a record

1. Press GUIDE to display the program guide.
2. Select the desired channel.
3. Press • (red) to schedule the record of the broadcast.

Editing the scheduled record list

1. Press TOOLS.
2. Press »Recorded List«.

Tips

- When it is time for recording, a warning message will be displayed before the product automatically switches to the channel to be recorded. Press > to cancel recording.
- Recording and watching options might be limited by the channel provider.
- External hard disks that need a current of 500 mA and above can only be connected to **USB2 (HDD)** socket.
- You will need a storage area of 2.6 to 6.6 GB for a one-hour recording.
- The recorded programs can only be watched on the TV on which the recording has been performed.

Watching TV with time shift

You will need an external data medium for this function.

1. Press ⏸ to pause the current program.
2. Press ▶ to resume the program.
3. Press ◀◀ / ▶▶ to fast-forward/ rewind.
4. Press ■ to return to live broadcast.

Tips

- Maximum time for time shift is one hour.
- The option for watching TV with the time shift function might be limited by the channel.
- As default, rewinding is performed only to the point where you press ⏸. You can set your TV so that it rewinds up to an hour.

Media player

The media player displays photos, plays recorded programs and movies, and plays music files. Movies, music files and photos can be stored on a connected USB device.

Playing media

1. MY MEDIA Press .
2. Select »Movie«, »Music« or »Photo« to play a movie, display photos or play audio files.
3. Go to the file or record, press OK to select and press ▶ to play.

Tips

- When displaying photos, press MENU on the remote control to display the buttons.
- When displaying movies, press BACK on the remote control to display the buttons.
- Movies can be played with subtitles. The file name of the subtitle file must be identical to the file name of the movie file. Both files must be in the same folder. Subtitles in the .SRT, .SUB, .ASS, .SSA and .SMI formats are supported.

Turning on the display of subtitles:

1. When watching a movie, press ⊟.

Applications

Interactive applications allow you to use various Internet services easily.

Opening the applications

1. Press @ on the remote control.
2. Press one of the applications listed and press OK to launch.

Launching the Netflix application

1. Press NETFLIX on the remote control;

   or

   Press @. Under the Applications menu, select »Netflix« and press OK.

Additional information

Default satellites
59

LNB power supply
13/18 V, 14/19 V optional, maximum 500 mA

LNB switching signal
0/22 kHz 650 mV +/- 250 mVpp

DiSEqC
1.0-operation

Digital reception ranges

Satellite

Ku band:	10,700 MHz ... 12,750 MHz
Modulation:	DVBS QPSK, DVBS2 QPSK, 8 PSK
IF band:	950 MHz ... 2150 MHz
Signal strength:	–25 dBm ... –65 dBm

Cable (DVB-C)

General band:	110 MHz ... 862 MHz
Modulation:	16 QAM, 32 QAM,64 QAM, 128 QAM and 256 QAM
Symbol rate:	4.0 Msym/s ... 7.2 Msym/s

Terrestrial (DVB-T)

VHF/UHF-Band, bandwidth 7 MHz and 8 MHz

FFT size:	2 k, 8 k
Modulation:	16 QAM, 64 QAM, QPSK
Guard interval:	1/4, 1/8, 1/16, 1/32

Terrestrial (DVB-T2)*

VHF/UHF-Band, bandwidth 7 MHz and 8 MHz

FFT size:	1 k, 2 k, 4 k, 8 k, 16 k, 32 k
Modulation:	16 QAM, 64 QAM, 256 QAM, QPSK
Guard interval:	1/4, 19/256, 1/8, 19/128, 1/16, 1/32, 1/128

* DVB-T2 is optional and therefore not available on all products.

Analog reception ranges
C02 ... C80, special channels S01 ... S41

Preset channels

TV/Radio	6000 (satellite – DVB-S), 1000 (cable – DVB-C) or 99 (analog) 1000 (terrestrial – DVB-T) or 99 (analog)

Supported media files

Picture files:	jpg/jpe, bmp, png
Music files:	m4a, aac
Video files	mov, xvid, mpg, mpe, vob, dat, trp, ts, avi, mp4, mkv

Technical changes and errors reserved.

Licenses

HIGH-DEFINITION MULTIMEDIA INTERFACE

HDMI, the HDMI logo and High-Definition Multimedia Interface are trademarks or registered trademarks of HDMI Licensing LLC.

For DTS patents, see http://patents.dts.com. Manufactured under license from DTS Licensing Limited. DTS, the Symbol, DTS and the Symbol together, DTS-HD, and the DTS-HD logo are registered trademarks or trademarks of DTS, Inc. in the United States and/or other countries. © DTS, Inc. All Rights Reserved.".

Dolby, Dolby Audio double D symbol are trademarks of Dolby Laboratories.

Explanation of the symbols which may be present on back side of the television set

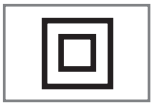

Double insulation. Television set doesn't require connection to electrical earth (ground).



Alternating current. The set works only with AC line voltage in your household electricity.



Direct current. The set works only with AC/DC adapter.

Cleaning the TV set

Pull the power cord out of the mains socket. Clean the appliance with a damp cloth and a mild detergent. Do not use any detergents containing alcohol, spirit, ammonia or scouring agent.

Use a damp, soft cloth to clean the screen. Do not use water with soap or detergent.

Abbreviations

- ARC: Audio return channel, transmits sound from the TV via an HDMI connection.
- AV: Audio/video.
- CAM: Module for receiving scrambled TV channels.
- CI: Slot for modules for receiving scrambled TV channels.
- HbbTV: It is standard for information and services provided through TV signals and over the Internet, and it is an additional service provided by some broadcast stations.
- HD: Collective term for high-resolution audio/video data, usually 720, 1080 or 2160 lines.
- HDMI: Connection for high-resolution digital audio/video data.
- LAN: local area network.
- VESA: Organization that has developed a standard for mounting the screens.
- WLAN: wireless local area network.