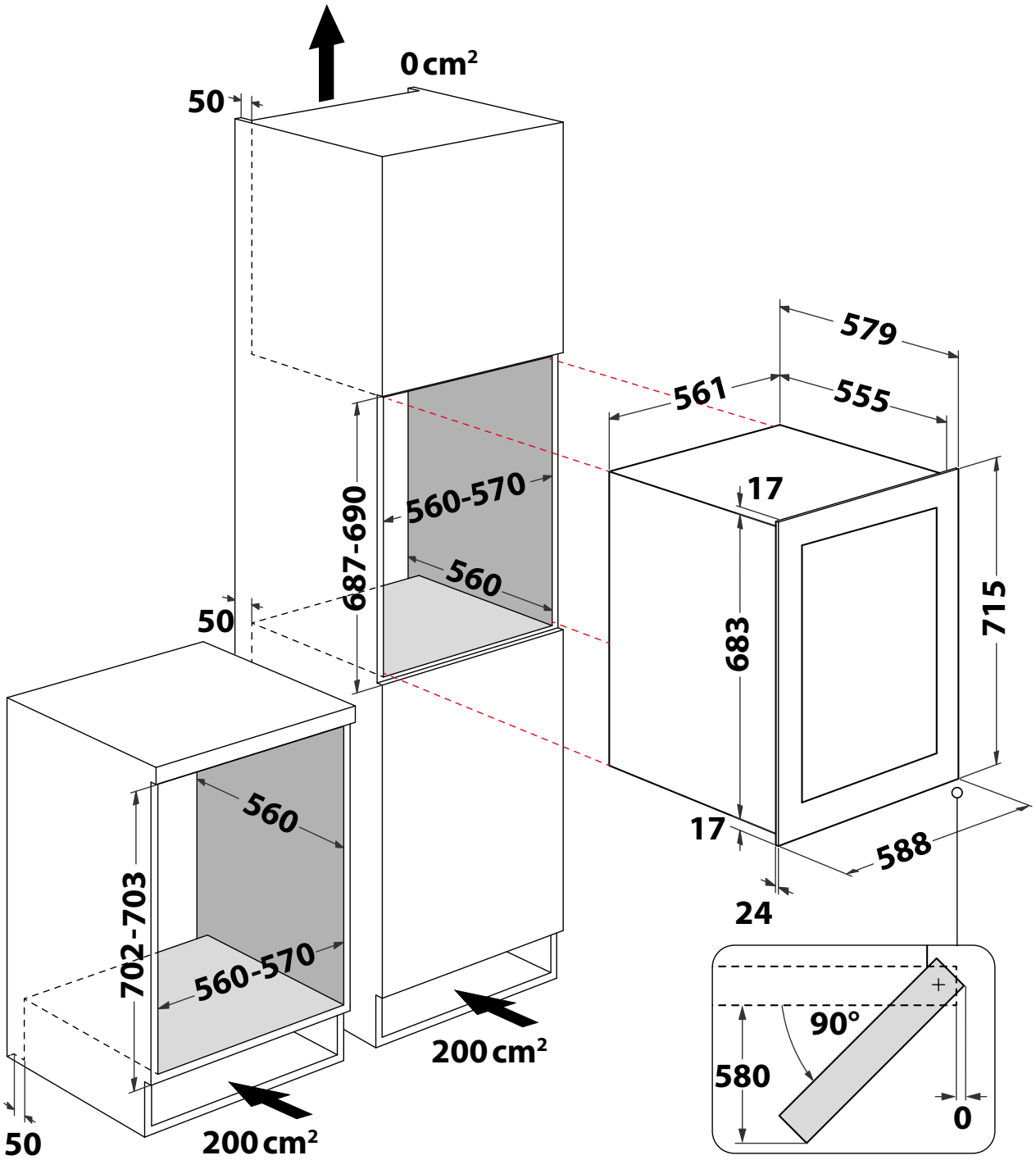
0 cm²
50
687-690
560-570
560
50
702-703
560
560-570
50
200 cm²
200 cm²
579
561
555
17
683
715
17
588
24
90°
580
0

HA7 WC711

12NC/Fx: F159512

GTIN (EAN) code: 8050147595121

DIMENSION	MEASURE	
WOODEN CABINET - Overall Wooden Cabinet - BI		
01. Height MIN of the tall cabinet Niche, including all required space for installation or ventilation (HMIN_T)	687	mm
02. Height MAX of the tall cabinet Niche, including all required space for installation or ventilation (HMAN_T)	690	mm
03. Width MIN of the tall cabinet Niche, including all required space for installation or ventilation (WMIN_T)	560	mm
04. Width MAX of the tall cabinet Niche, including all required space for installation or ventilation (WMAN_T)	570	mm
05. Depth of the tall cabinet Niche, including all required space for installation or ventilation (DN_T)	560	mm
06. Height MIN of the base cabinet Niche, including all required space for installation or ventilation (HMIN_B)	702	
07. Height MAX of the base cabinet Niche, including all required space for installation or ventilation (HMAN_B)	703	
08. Width MIN of the base cabinet Niche, including all required space for installation or ventilation (WMIN_B)	560	
09. Width MAX of the base cabinet Niche, including all required space for installation or ventilation (WMAN_B)	570	
10. Depth of the base cabinet Niche, including all required space for installation or ventilation (DN_B)	560	
11. Indicates whether a ventilation opening is needed or not. Default is "N"	Yes	
12. Appliance can be used as base for other appliances from the same manufacturer. Default is "N"	No	
WOODEN CABINET - Door – Drawer		
13. Height MIN Decorative Front, if appliance has more than one front, only the most bottom left front is described here (HMIF)	0	mm
14. Width MIN Decorative Front, if appliance has more than one front, only the most bottom left front is described here (WMIF)	0	mm
15. Weight/Thickness of the decorative bottom front panel of the Kitchen manufacturer needs (essential)	No	
16. Weight MAX of the decorative bottom front panel of the Kitchen manufacturer (WEMAF)	0	kg
17. Thickness MIN Decorative Front, if appliance has more than one front only the most bottom left front is described here(TMIF)	0	mm
18. Thickness MAX Decorative Front, if appliance has more than one front only the most bottom left front is described here(TMAF)	0	mm
Additional Fronts (2 doors)		
19. Height MIN Decorative Front, when appliance has more than one front, upper front is discribed here (HMIFU)	0	mm
20. Width MIN Decorative Front, when appliance has more than one front, upper front is discribed here (WMIFU)	0	mm
21. Weight/Thickness of the decorative upper front panel of the Kitchen manufacturer needs (essential)	No	
22. Weight MAX of the decorative upper front panel of the Kitchen manufacturer (WEMAFU)	0	kg
23. Thickness MIN Decorative Front, when appliance has more than one front, upper front is discribed here (TMIFU)	0	mm
24. Thickness MAX Decorative Front, when appliance has more than one front, upper front is	0	mm

DIMENSION	MEASURE	
APPLIANCE		
Overall Appliance		
01. Height MIN Product, watch the detail drawing for the exact position of the dimension line (HMIP)	683	mm
02. Height MAX product, watch the detail drawing for the exact position of the dimension line (HMAP)	683	mm
03. Width product, watch the detail drawing for the exact position of the dimension line (WP)	561	mm
04. Depth product without front, watch the detail drawing for the exact position of the dimension line (DP)	555	mm
05. Depth product, watch the detail drawing for the exact position of the dimension line (D)	579	mm
06. Depth MIN plinth return front (DMIPRF)	0	mm
07. Depth MAX plinth return front (DMAPRF)	0	mm
08. Height MIN Plinth return. This dimension is taken by minimum appliance height (HMIPR)	0	mm
09. Height MAX Plinth return. This dimension is taken at minimum appliance height (HMAPR)	0	mm
Door or Drawer		
10. Height front. When appliance has more than one front, only the most bottom left front is discribed here (HF)	715	mm
11. Width front. When appliance has more than one front, only the most bottom left front is discribed here (WF)	588	mm
12. Depth front (DF)	24	mm
13. Maximum depth all protruding elements, e.g. handles, controls (DC)	42	mm
14. Lateral clearance between front edge and most protruding elements which avoid to open a neighbour front more than 90° (CC)	30	mm
15. Projection of front in relation to housing of appliance (FPT)	17	mm
16. Projection of front in relation to bearing area of the appliance. Taken at MIN height of appliance if adjustable height(FPB)	17	mm
17. Height Product Panel. When product panel is missing, set to 0 (HMAPP)	0	mm
18. Lateral projection of front including controls when door is opened totaly. At the side where the hinge is mounted (FPOD)	42	mm
19. Space in front, which is required to guarantee full operability. The most protruding part gives this dimension (RSF)	580	mm
20. Lateral projection of opened front at the side where the hinge is fixed (FPD)	0	mm
21. Door hinge positiong and tipology	Right	
22. Type of preparation to fix the cover door	N/A	
23. Maximum angle when door is opened totaly (AOD)	90	°
24. Maximum thickness of the upper front panel (TUFP)	0	mm
Additional Fronts (2 doors)		
25. Height front, when appliance has more than one front, upper front is discribed here (HUF)	0	mm
26. Width front, when appliance has more than one front, upper front is discribed here (WUF)	0	mm
27. Useful space between the 2 doors, including hinges size (HMAFG)	0	mm
28. Distance between the bottom of the product and the center line between the fridge doors (HFG)	0	mm

discribed here (TMAFU)		
TALL WOODEN CABINET - Vent-shaft incoming		
25. Indicates the position of the freespace for the incoming airflow, tall wooden cabinet	Front-Bottom	
26. Clearance MIN Ventilation, tall wooden cabinet (CMIV_TI)	50	mm
27. Ventilation cavity minimum, tall wooden cabinet (VC_TI)	200	cm²
TALL WOODEN CABINET - Vent-shaft outgoing		
28. Indicates the position of the freespace for the outgoing airflow, tall wooden cabinet	Front	
29. Clearance MIN Ventilation, tall wooden cabinet (CMIV_TO)	50	mm
30. Ventilation cavity minimum, tall wooden cabinet (VC_TO)	0	cm²
BASE WOODEN CABINET - Vent-shaft incoming		
31. Indicates the position of the freespace for the incoming airflow, base wooden cabinet	Front-Bottom	
32. Clearance MIN Ventilation, base wooden cabinet (CMIV_BI)	50	mm
33. Ventilation cavity minimum, base wooden cabinet (VC_BI)	200	cm²
BASE WOODEN CABINET - Vent-shaft outgoing		
34. Indicates the position of the freespace for the outgoing airflow, base wooden cabinet	Front	
35. Clearance MIN Ventilation, base wooden cabinet (CMIV_BO)	0	mm
36. Ventilation cavity minimum, base wooden cabinet (VC_BO)	0	cm²