# THP 751 W/IX/I IT

12NC: F104082

GTIN (EAN) code: 8050147040829



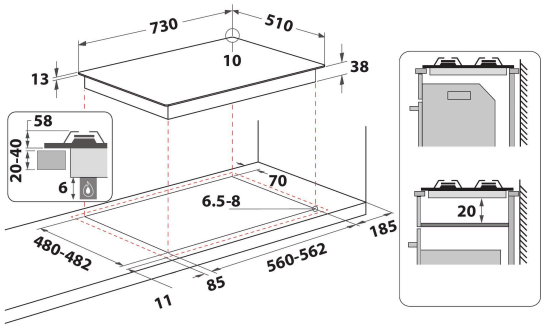


## MAIN FEATURES

| | |
|---|---|
| Product group | Hob |
| Construction type | Built-in |
| Type of control | Mechanical |
| Type of control settings | Knob |
| Number of gas burners | 5 |
| Number of electric cooking zones | 0 |
| Number of electric plates | 0 |
| Number of radiant plates | 0 |
| Number of halogen plates | 0 |
| Number of induction plates | 0 |
| Number of electric warming zones | 0 |
| Location of control panel | Front |
| Basic surface material | Stainless Steel |
| Main colour of product | Inox |
| Electrical connection rating (W) | 0 |
| Gas connection rating (W) | 0 |
| Gas type | Methane |
| Current (A) | 0,2 |
| Voltage (V) | 220-240 |
| Frequency (Hz) | 50/60 |
| Length of Electrical Supply Cord (cm) | 100 |
| Plug type | No |
| Gas connection | N/A |
| Width of the product | 750 |
| Height of the product | 33 |
| Depth of the product | 510 |
| Minimum niche height | 0 |
| Minimum niche width | 555 |
| Niche depth | 475 |
| Net weight (kg) | 11.5 |
| Automatic programmes | No |

## TECHNICAL FEATURES

| | |
|---|---|
| Power on indicator | No |
| Number of indicators | 0 |
| Type of regulation | Rapid |
| Type of lid | Without |
| Residual heat indicator | Without |
| Main on/off switch | No |
| Safety device | No |
| Timer | No |

## PERFORMANCES

| | |
|---|---|
| Energy input | Gas |