FUJITSU Desktop
ESPRIMO G5010 / G9010

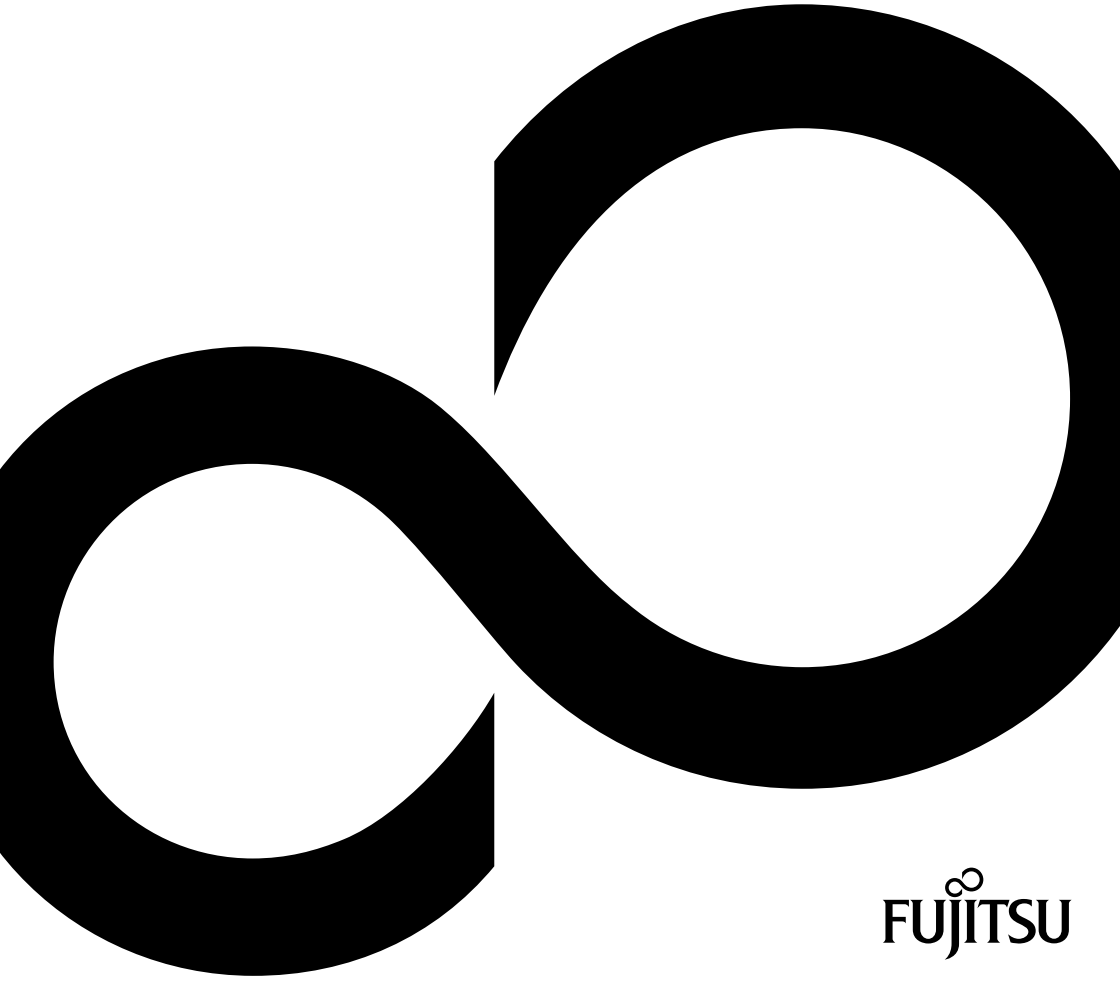

FUJITSU

Thank you for buying an innovative product from Fujitsu.

Latest information about our products, useful tips, updates etc. is available on our website: "http://www.fujitsu.com/fts/"

You can find driver updates at: "http://support.ts.fujitsu.com/download"

Should you have any technical questions, please contact:

- our Hotline/Service Desk ("http://support.ts.fujitsu.com/contact/servicedesk")
- Your sales partner
- Your sales office

We hope you enjoy using your new Fujitsu system!



Issued by / EU importer

Fujitsu Technology Solutions GmbH

Mies-van-der-Rohe-Straße 8

80807 Munich, Germany

"http://www.fujitsu.com/fts/"

Copyright

© Fujitsu Technology Solutions GmbH2020. All rights reserved.

Publication Date

08/2020

Order No.: A26461-K2010-Z320-1-7619, edition 1

FUJITSU Desktop
ESPRIMO G5010 / G9010

Operating Manual

Your ESPRIMO	**5**
Important notes	**7**
Device overview	**10**
Getting started	**13**
Connecting external devices	**19**
Switching on for the first time: installing the software	**21**
Operation	**23**
Software installation and restore	**28**
Problem solutions and tips	**29**
System expansions and repairs	**32**
Technical data	**33**
Index	**35**

Remarks

Information on the product description meets the design specifications of Fujitsu and is provided for comparison purposes. Several factors may cause the actual results to differ. Technical data is subject to change without prior notification. Fujitsu rejects any responsibility with regard to technical or editorial mistakes or omissions.

Trademarks

Fujitsu, the Fujitsu logo and ESPRIMO are registered trademarks of Fujitsu Limited or its subsidiaries in the United States and other countries.

Kensington and Microsaver are registered trademarks of ACCO Brands.

USB Type-C™ and USB-C™ are trademarks of the USB Implementers Forum in the USA and other countries.



The terms HDMI and HDMI High-Definition Multimedia Interface and the HDMI logo are trademarks or registered trademarks of HDMI Licensing Administrator, Inc. in the United States and other countries.

Microsoft and Windows are trademarks or registered trademarks of Microsoft Corporation in the USA and/or other countries.

All other trademarks specified here are the property of their respective owners.

Copyright

No part of this publication may be copied, reproduced or translated without the prior written consent of Fujitsu.

No part of this publication may be saved or transferred by any electronic means without the written approval of Fujitsu.

Contents

Your ESPRIMO **5**
Validity of the Reference Manual 5
Notational conventions 6

Important notes **7**
Safety notes 7
Transporting the device 8
Cleaning the device 8
Energy saving, disposal and recycling 9
Important notes for operating your device via USB Power Delivery (USB-PD) 9

Device overview **10**
Front view 10
Rear view 11

Getting started **13**
Unpacking and checking the delivery 13
Steps for initial setup 13
Setting up the device 14
Vertical operating position 14
Horizontal operating position 16
Connecting the mains adapter 18
Connecting the device to the network (LAN) 18

Connecting external devices **19**
Ports on the device 19
Connecting a monitor 20
Connecting a USB mouse 20
Connecting a USB keyboard 20
Connecting external devices to the USB ports 20
Device drivers 20
Connecting Audio Devices 20

Switching on for the first time: installing the software **21**
Switch on the monitor and the machine 22
Installing the software 22

Operation **23**
Switch the device on 23
Switching off the device 23
Procedure in an emergency 23
Settings in the BIOS setup 23
Property and data protection 24
Security Lock device 24
Securing USB covers (optional) 25
BIOS setup security functions 26
Delete data 27

Software installation and restore **28**
Installing new software 28
Download current drivers/software 28

Problem solutions and tips **29**

Help if problems occur 29
Troubleshooting 29
Power-on indicator remains unlit after you have switched on your device 29
The device cannot be switched off with the On/Off switch. 30
Monitor remains blank 30
No mouse pointer displayed on the screen 31
Time and/or date is not correct 31
Error messages on the screen 31
Tips 31

System expansions and repairs 32

Technical data 33
FUJITSU Desktop ESPRIMO G5010 / G9010 33
AC adapter 34

Index 35

Your ESPRIMO

... is available with various configuration levels, which differ in terms of hardware and software equipment. You can install additional drives (for example a DVD drive) and other boards.

This manual tells you how to start using your device and how to operate it in daily use. This manual applies for all configuration levels. Depending on the configuration level chosen some of the hardware components described may not be available on your device. Please observe the notes on your Operating System.

Depending on the configuration selected, the operating system is pre-installed on your hard disk (e.g. Windows).

Detailed information on this device is also provided:

- in the "Quick Start Guide" poster
- in the "Safety/regulations" manual
- in the "Warranty" manual
- in the BIOS manual for your device
- in the manual for "System expansions and repairs"
- in the operating manual for the monitor
- in the manual for the motherboard
- in your Operating System documentation

Validity of the Reference Manual

This description applies to the following systems (possibly with the following suffixes):

- FUJITSU Desktop ESPRIMO G5010
- FUJITSU Desktop ESPRIMO G9010

Notational conventions

	Pay particular attention to text marked with this symbol. Failure to observe these warnings could pose a risk to health, damage the device or lead to loss of data. The warranty will be invalidated if the device becomes defective through failure to observe these warnings.
	Indicates important information for the proper use of the device.
►	Indicates an activity that must be performed
↳	Indicates a result
`This font`	indicates data entered using the keyboard in a program dialogue or at the command line, e.g. your password (**`Name123`**) or a command used to start a program (**`start.exe`**)
`This font`	indicates information that is displayed on the screen by a program, e.g.: `Installation is complete.`
This font	indicates • terms and texts used in a software interface, e.g.: Click on *Save* • names of programs or files, e.g. *Windows* or *setup.exe*.
"This font"	indicates • cross-references to another section, e.g. "Safety information" • cross-references to an external source, e.g. a web address: For more information, go to "http://www.fujitsu.com/fts" • Names of CDs, DVDs and titles or designations for other materials, e.g.: "CD/DVD Drivers & Utilities" or "Safety/Regulations" manual
Key	indicates a key on the keyboard, e.g: F10
This font	indicates terms and texts that are emphasised or highlighted, e.g.: **Do not switch off the device**

Important notes

In this chapter you will find information regarding safety which it is essential to take note of when working with your device.

Safety notes



Please follow the safety notes provided in the "Safety/Regulations" manual as well as the safety notes given below.

When installing and operating the device, observe the instructions for environmental conditions in the chapter "Technical data ", Page 33 and the chapter "Getting started", Page 13 or the instructions in the data sheets.

To ensure that the housing is adequately ventilated, please observe the clearances around the device when installing it. In order to avoid overheating, the ventilation surfaces of the screen and the device must not be covered.

You may only operate the device if the nominal voltage of the device corresponds to the local mains voltage.

To completely disconnect the unit from the power supply, unplug the power cord from the wall outlet.

Please note that components in the system and the surface of the device can reach high temperatures.

The activities described in these instructions must always be performed with the greatest care.

For system expansions and repairs to the unit, refer to the manual “System Expansions and Repairs”. Some of the activities described in this manual may only be performed by authorized personnel. Improper repairs may cause danger to the user (electric shock, fire hazard) or material damage to the unit.

Operate the device only with the casing closed.

Do not put or place any objects on the top of the unit.

Do not apply pressure to the top of the unit during operation.



Power cable and mains adapter:

The supplied power cable conforms to the requirements of the country in which you purchased your device. Make sure that the power cable is approved for use in the country in which you intend to use it.

The mains adapter's power cable should only be connected to a mains socket if the device is connected.

Do not use the mains adapter for other devices.

Only use the power adapter provided for the device, see chapter "Technical data ", Page 33.

Optionally, you can operate the system without a line adapter using a Fujitsu monitor with the Power Delivery function (e.g. P24-9 TE or P27-9 TS) and a USB-C cable, see chapter "Important notes for operating your device via USB Power Delivery (USB-PD)", Page 9.

Make sure that the rated current of the mains adapter is not higher than that of the power system to which you connect the mains adapter.

ON/OFF switches do not disconnect the device from the mains voltage. To completely disconnect the mains voltage, remove the power plug from the power socket.

Transporting the device



Transport all devices separately in their original packaging or in a packaging that protects them from knocks and jolts.

Unpack them only at the installation site.

If the device is brought from a cold environment into the room where it will be used, condensation may occur. In order to avoid damage to the device, wait before preparing it for use until the device has reached the ambient temperature and it is absolutely dry.

Cleaning the device



Turn off all power and equipment switches and disconnect the power plug from the mains outlet.

Do not clean any interior parts yourself, leave this job to a service technician.

Do not use any cleaning agents that contain abrasives or may corrode plastic (alcohol, thinner or acetone).

Never clean the device with water! Water entering into the device could present a serious risk to users (e.g. electric shock).

Ensure that no liquid enters the system.

The surface can be cleaned with a dry cloth. If particularly dirty, use a cloth that has been moistened in mild domestic detergent and then carefully wrung out.

Use disinfectant wipes to clean the keyboard and the mouse.

Energy saving, disposal and recycling

Information on these subjects can be found in the manual "Environmental and Energy Information" or on our website ("http://www.fujitsu.com/fts/about/fts/environment-care/").

Important notes for operating your device via USB Power Delivery (USB-PD)

Your device supports USB-PD, a function defined by the USB Implementers Forum (USB-IF) (current specification): USB-PD version 2.0).

You can use USB-PD to power the device via a USB-C cable. The Fujitsu P24-9 TE monitor, for example, acts as a power adapter for this purpose. No further connection cables to the system are required.

Make sure that you always use the USB-C to USB-C cable included with the screen when operating via USB-PD. Otherwise, security problems may occur. To ensure safety and compatibility, use only the supplied USB-C cable or an equivalent certified USB-C cable. In an extreme situation (CPU fully loaded and many external USB devices with high power consumption simultaneously connected to your ESPRIMO), the internal CPU frequency can be lowered to avoid power overload. Mouse, keyboard, headphones and similar devices have low power consumption and do not cause overload. Once the overload is over, the CPU frequency returns to its normal value. In order to avoid a performance limitation, the device causing the overload must be stopped, or the number of USB devices with high power consumption connected to the ESPRIMO must be reduced.

Device overview

This chapter presents the individual hardware components of your device. This will provide you with an overview of the operating controls of the device. Please familiarise yourself with these components before you start to work with the device.

Front view

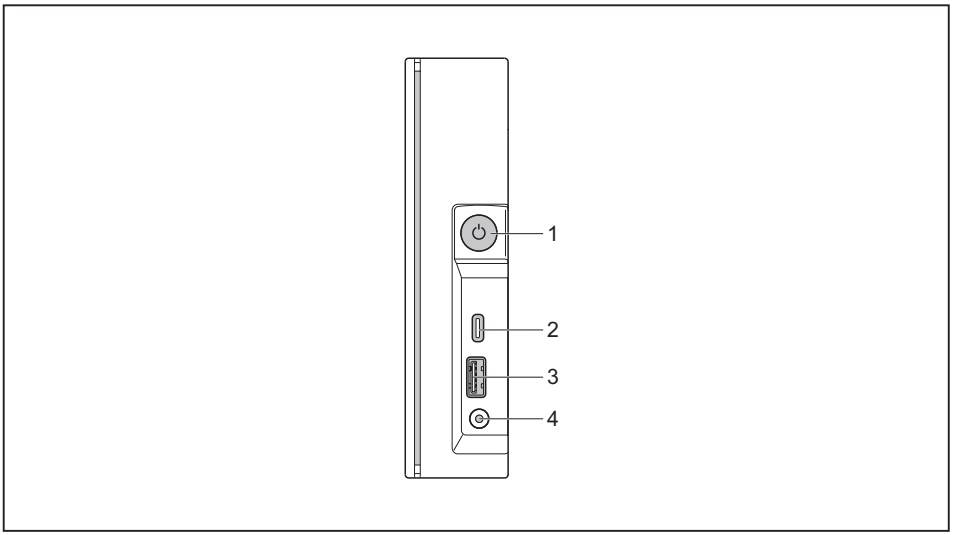

1 = On/off switch with operation indicator
2 = USB port (USB 3.1, type C)
3 = USB port (USB 3.1, type A)
4 = Combined Headphone and Microphone Port

Rear view

FUJITSU ESPRIMO G5010

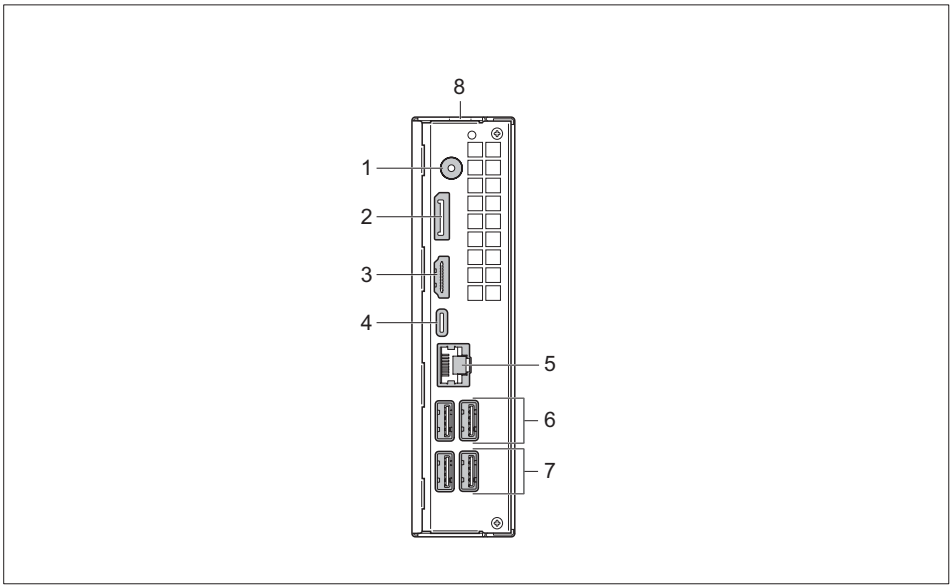

1 = DC Socket (DC IN)
2 = DisplayPort
3 = HDMI port
4 = USB port (USB 3.1, type C)
5 = RJ45 LAN socket (Local Area Network)
6 = USB ports (USB 2.0, type A)
7 = USB ports (USB 3.1, type A)
8 = Security Lock device

FUJITSU ESPRIMO G9010

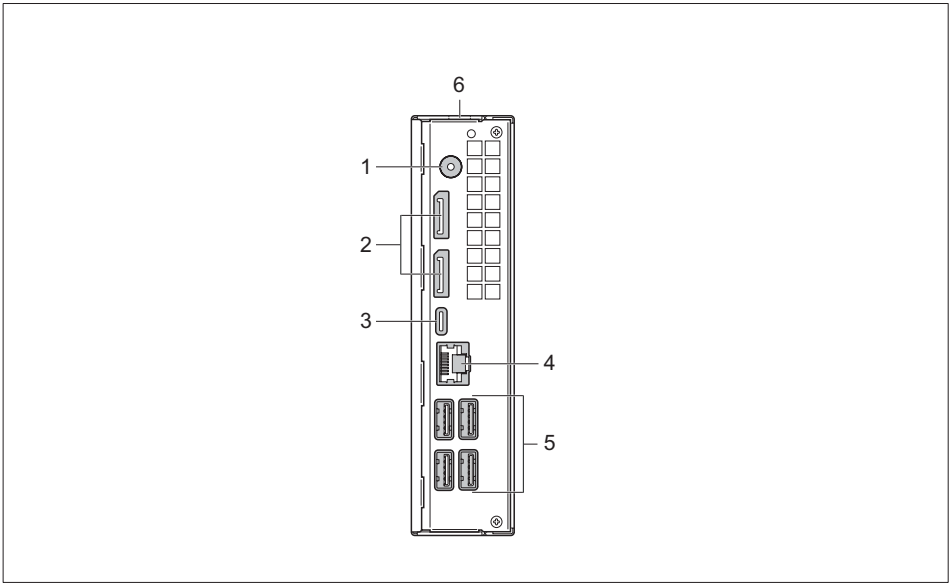

1 = DC input jack (DC IN)
2 = Displayports
3 = USB port (USB 3.1, type C)
4 = RJ45 socket (Local Area Network)
5 = USB ports (USB 3.1, type A)
6 = Security Lock Device

Getting started



Please observe the safety information in the "Important notes", Page 7 chapter.

Unpacking and checking the delivery

It is recommended not to throw away the original packaging material! It may be required for reshipment at some later date.

- ► Unpack all the individual parts.
- ► Check the contents of the package for any visible damage caused during transport.
- ► Check whether the delivery conforms to the details in the delivery note.
- ► Should you discover that the delivery does not correspond to the delivery note, notify your local sales outlet immediately.

Steps for initial setup

Only a few steps are necessary to put your new device into operation for the first time:

- Select a location for device and set up device
- Connect external devices such as mouse, keyboard and monitor
- Check the voltage at the mains outlet and connect the device to an electrical outlet
- Switch the device on

You will learn more about the individual steps in the following sections.

External devices



If you have received other external devices in addition to your own device (e.g. a printer), do not connect these until after the initial installation. The following sections describe how to connect these external devices.

Drives and boards



If you have received drives or boards as well as your device, please do not install them until after first-time setup. Installation of drives and boards is described in the "System expansions and repairs" manual.

Setting up the device

When setting up your device, please read the recommendations and safety notes in the "Safety/regulations" manual.

We recommend that you place your device on a surface with good anti-slip qualities. In view of the multitude of different finishes and varnishes used on furniture, it is possible that the rubber feet will mark the surface they stand on.

Depending on your device location, disturbing vibrations and noises may occur. In order to avoid this, a minimum distance of 10 mm / 0.39 inch to other devices or objects should be maintained on housing sides without ventilation surfaces.

In order to avoid overheating, do not cover the ventilation areas on the monitor or the device.

For ventilation surfaces, a minimum distance of 200 mm / 7.87 inch from the device must be maintained.

Do not place several devices on top of each other or a monitor on top of the device.

Do not expose the device to extreme ambient conditions (see "Technical data ", Page 33, "Ambient conditions"). Protect the device against dust, humidity and heat.

You can use the device in a vertical or horizontal operating position.

Vertical operating position

If you want to operate the unit in a vertical position, use the foot supplied with the unit.

Attach the foot only to the side of the device shown in the figures.

If connecting many cables to the device, ensure that the device is in a stable position, in order to prevent it from toppling over.

Proceed as follows to prepare the device for the vertical operating position:

- ► Disconnect the cables if required.
- ► Lay the device on its top (narrow side) as shown, on a stable, flat and clean surface.

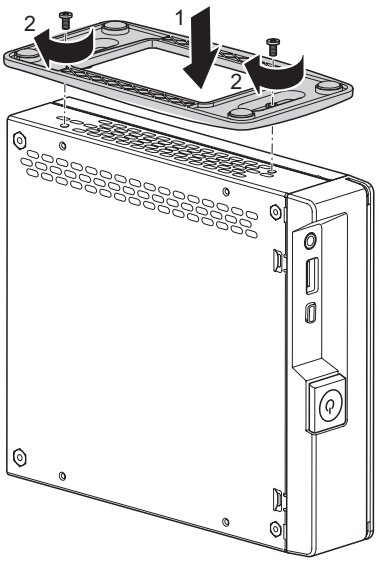

► Place the foot on the housing (1). Make sure that you align the screw holes on the foot with the corresponding holes on the housing.

► Fix the foot with the screws (2).

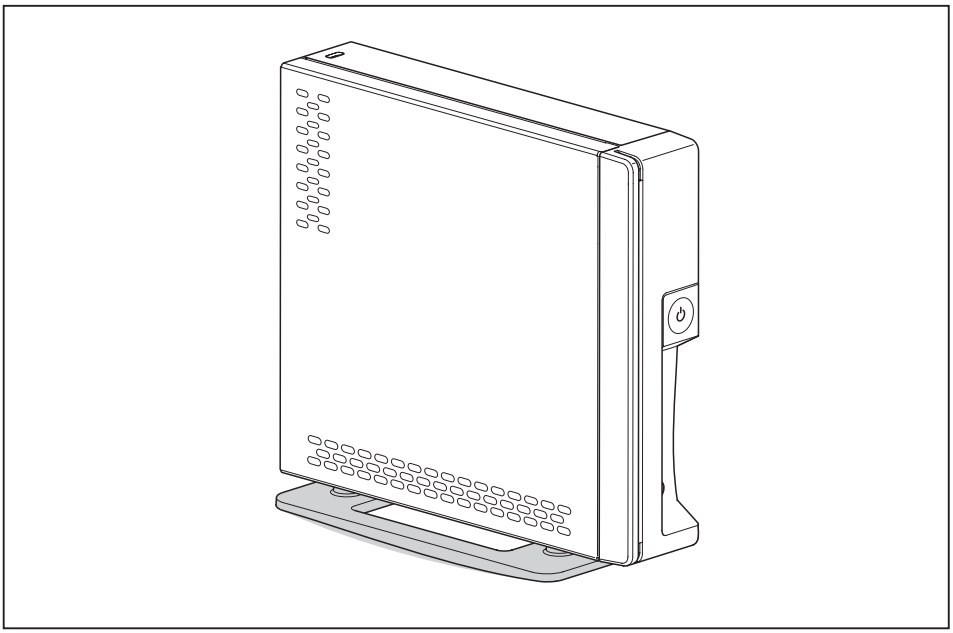

► Place the unit on the foot.
► If necessary, reconnect any cables that were previously disconnected.

Horizontal operating position

If you want to operate the device in a horizontal operating position, use the four supplied adhesive feet for the horizontal operating position.

Attach adhesive feet only to the side of the device shown in the figures.

Proceed as follows to prepare the device for the horizontal operating position:

► Disconnect the cables if required.
► Lay the device on its right side as shown, on a stable, flat and clean surface.

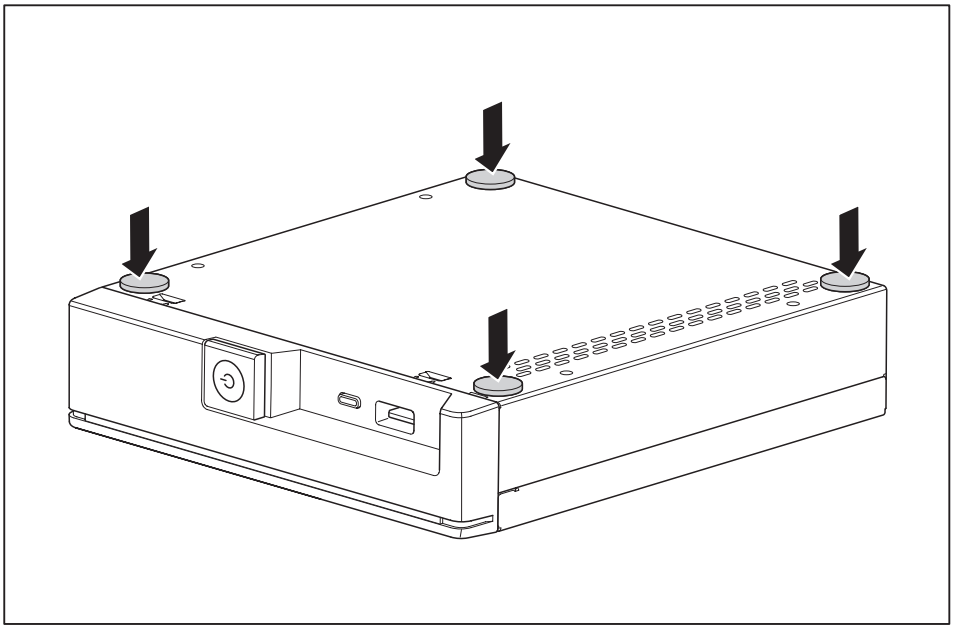

► Stick the adhesive feet as shown on the side of the device.

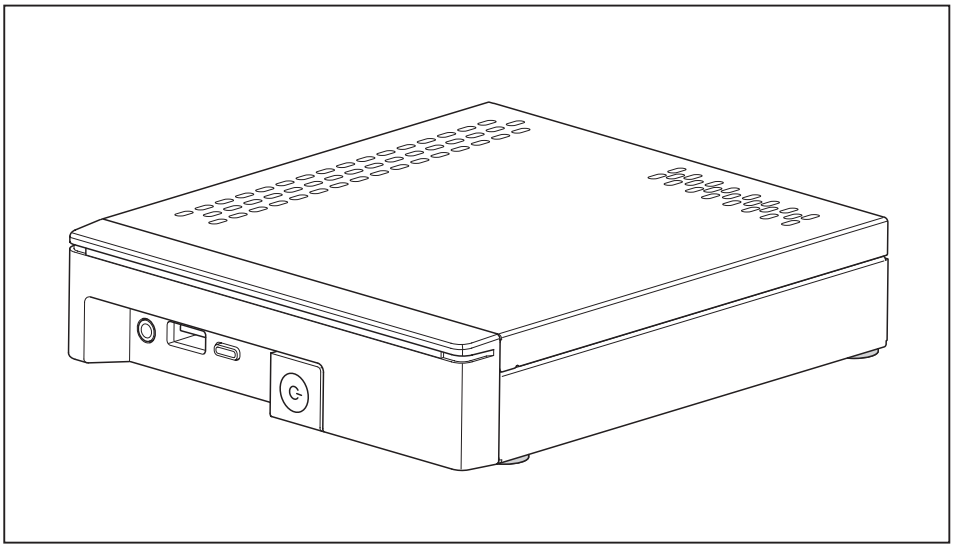

► Place the device on the adhesive feet.
► If necessary, reconnect any cables that were previously disconnected.

Connecting the mains adapter

Observe the safety notes in the enclosed "Safety/Regulations" manual.

The supplied power cable conforms to the requirements of the country in which you purchased your device. Make sure that the power cable is approved for use in the country in which you intend to use it.

Example: ESPRIMO G9010

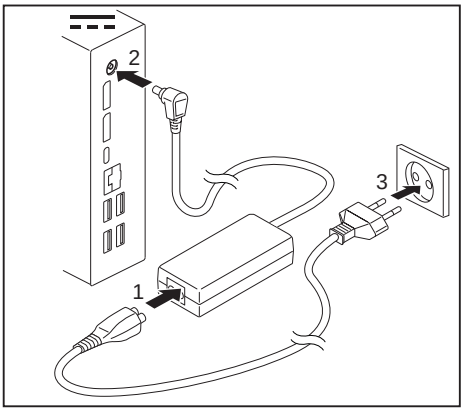

- ► Connect the mains cable (1) to the mains adapter.
- ► Connect the mains adapter cable (2) to the DC jack (DC IN) of the device.
- ► Plug the mains cable (3) into a mains socket.

Optionally, you can operate the system via the USB-C cable, e.g. in combination with the Fujitsu P24-9 TE monitor.

Connecting the device to the network (LAN)

- ► Connect the 10/100/1000 Base T network cable to the RJ45 LAN port.

Connecting external devices



Read the documentation on the external device before connecting it.

With the exception of USB devices, always remove all power plugs before connecting external devices!

Do not connect or disconnect cables during a thunderstorm.

Always hold the plug of a cable when removing it. Never unplug a cable by pulling the cable itself.

To ensure that your device works properly, use only the connection cable supplied or use a high-quality connection cable.

Ports on the device

The ports are located on the front and rear side of the device. The ports available on your device depend on the configuration level you have selected. The standard ports are marked with the symbols shown below (or similar). Detailed information on the location of the ports is provided in the manual for the mainboard.

	Combined headphone and microphone port, black (front panel)		RJ45-LAN port
DP	Display port		HDMI port
	USB 2.0 - Universal Serial Bus, type A, black		USB 3.1 Gen2 - Universal Serial Bus, type A: blue, type C: black
	USB 3.1 Gen1 - Universal Serial Bus, type A: blue, type C: black		USB 3.1 Gen 1 type C with charging function: black
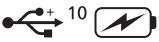	USB 3.1 Gen 1 type C with charging function: black		



Some of the connected devices require special software (e.g. drivers) (refer to the documentation for the connected device and operating system).

Connecting a monitor



Only attach the screen to your device when it is switched off.

- ► Follow the instructions contained in the monitor manual to prepare the monitor for operation (e.g. connecting cables).
- ► Connect the data cable to the required monitor port on your device.
- ► Plug the monitor power cable into the grounded mains outlet.

Connecting a USB mouse

- ► Connect the USB mouse to one of the USB ports on the device.

Connecting a USB keyboard

Use only the keyboard cable supplied.

- ► Plug the rectangular connector of the keyboard cable into the rectangular socket on the underside or on the rear of the keyboard.
- ► Plug the flat rectangular USB connector of the keyboard cable into a USB port of the device.

Connecting external devices to the USB ports

You can connect a wide range of external devices to the USB ports (e.g. printer, scanner, mouse or keyboard).



USB devices are hot-pluggable. This means you can connect and disconnect USB cables while your device is switched on.

Additional information can be found in the documentation for the USB devices.

- ► Connect the data cable to the external device.
- ► Connect the data cable to one of the USB ports on your device.

Device drivers



External USB devices which you connect to one of the USB ports don't usually need their own drivers because the software required is already included in the operating system. If the device requires separate software, please follow the instructions in the manufacturer's documentation.

Connecting Audio Devices

- ► Connect the audio device to the combined headphone and microphone port.

Switching on for the first time: installing the software



Once the installation has been started the device must not be switched off, unless the installation has been completed.

During installation, the device may only be rebooted when you are requested to do so!

The installation will otherwise not be carried out correctly and the contents of the hard disk must be completely restored.



If the device is integrated into a network, the user and server details as well as the network protocol are required during the software installation.

Contact your network administrator if you have any questions about these settings.

When you switch on the device for the first time, the supplied software is installed and configured. Plan a reasonable amount of time for this, as this process must not be interrupted.

Switch on the monitor and the machine

In order to avoid overheating, do not cover the ventilation areas on the monitor or the device.

► Switch on the monitor (see operating instructions for the monitor).

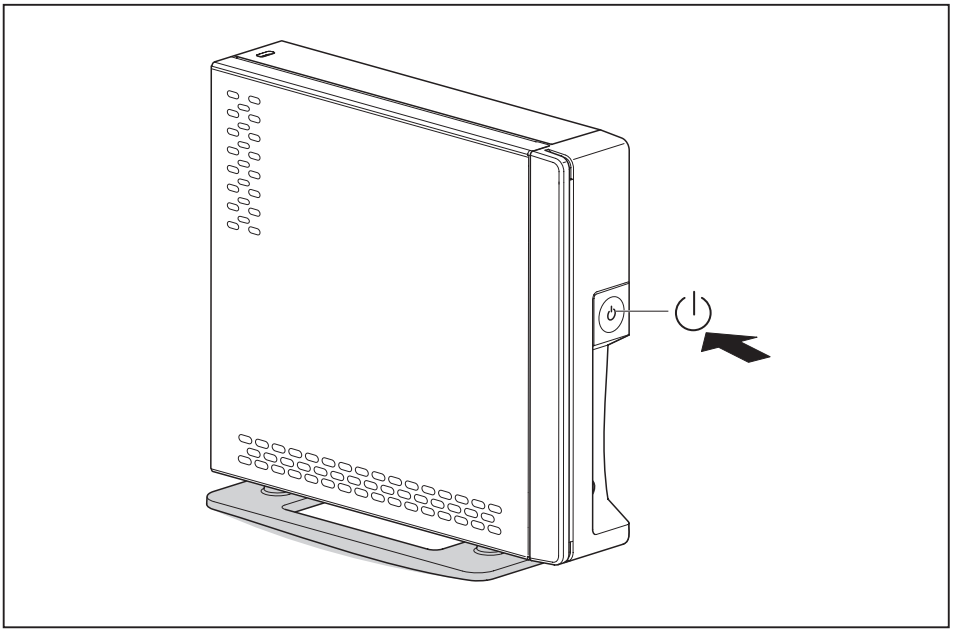

► Press the on/off button on the front of the machine.

↳ The operational display will light up and the machine will start.

Installing the software

► During installation, follow the on-screen instructions.

► If anything is unclear regarding the data you are asked to input, read the online Help in your operating system.

You will find more information on the system, as well as drivers, utilities and updates on the optional "Drivers & Utilities" DVD and on the Internet at "http://www.fujitsu.com/fts/support".

You can find information and help on the Windows operating system functions on the Internet at "http://windows.microsoft.com".

Operation

Switch the device on

► If necessary, switch the monitor on (see the operating manual for the monitor).
► Press the ON/OFF switch on the front of the device.
↳ The power indicator lights up and the device starts.

Switching off the device

► Shut down the operating system in the proper way. In Windows: from the *Start* menu select the *Shut Down* option.
► If the operating system does not automatically switch the device into energy-saving mode or switch it off, press the ON/OFF switch. Warning, this could lead to a loss of data!
↳ If the device is switched off, it consumes a minimum of energy.



The ON/OFF switch does not disconnect the device from the mains voltage. To completely disconnect the mains voltage, remove the power plug from the power socket.

► If necessary, switch the monitor off (see the operating manual for the monitor).

Procedure in an emergency



If the device cannot be switched off, you can force a shutdown by using the following emergency procedure.

Warning, this could lead to a loss of your data!

► Press the ON/OFF switch for at least 4 seconds.
↳ The device switches itself off.
The next time you restart the device, error messages may occur due to improper switching off.

Settings in the BIOS setup

In the BIOS setup, you can set system functions and the hardware configuration of the device. At delivery, the default entries are effective (see BIOS manual or mainboard manual). You can customize these settings in the BIOS setup.

Property and data protection

Software functions and mechanical locking offer a broad range of functions for protecting your device and your personal data from unauthorised access. You can also combine these functions.

Security Lock device

Using the Security Lock device and the Kensington Lock cable (steel cable, accessory) you can protect your device against theft. Please consult the manual for your Security Lock.

Your device has a security lock device located at the rear top (in vertical operating position).

When using the VESA sub-adapter, first connect the Kensington Lock Cable to the security lock device and then mount your device to the VESA sub-adapter. Refer to the manual that came with your VESA Mounting Kit ESPRIMO G for more information.



When using the Security Lock device, opening of the casing is also prevented.

Securing USB covers (optional)

To prevent use of the USB ports, you can attach optional USB covers to the USB ports on the front and rear side of the device.

Please note that USB covers, once fitted, cannot be removed again!

Be sure to insert the USB covers the right way round.

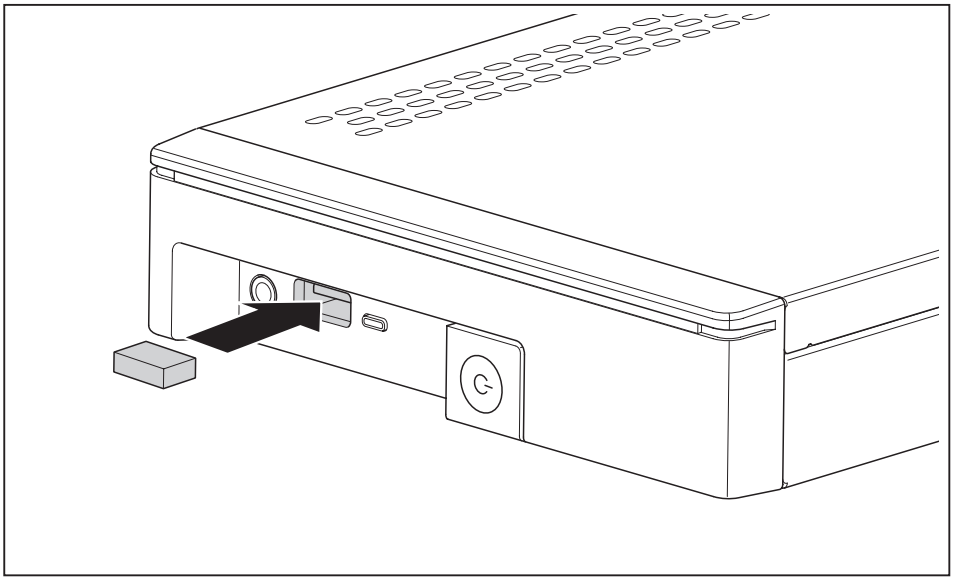

► Insert the USB cover into type A USB port on the front, and press the USB cover into place.

Example: ESPRIMO G9010

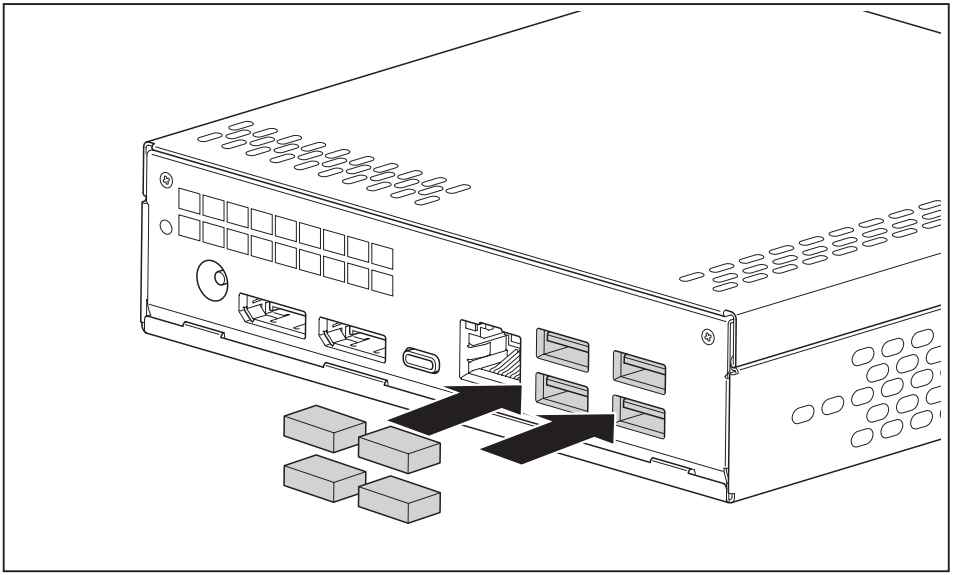

► Insert the USB covers into type A USB ports on the back of the device and push the USB covers in to place.

i

In the *BIOS Setup*, under *Advanced - USB Port Security*, you can also deactivate the USB ports, in order to limit the use of USB devices.

BIOS setup security functions

The *Security* menu in *BIOS Setup* offers you various options for protecting your personal data against unauthorized access, e.g.:

- Prevent unauthorized access to *BIOS Setup*
- Prevent unauthorised system access
- Prevent unauthorised access to the settings of boards with their own BIOS
- Activate virus warnings
- Protect BIOS from overwriting
- Protect the device from being switched on by an external device

You can also combine these functions.

A detailed description of the *Security* menu and how to assign passwords can be found in the manual for the mainboard or in the BIOS manual.

Delete data

Erase Disk function for hard disks and solid state drives

Erase Disk is a solution integrated in the firmware of FUJITSU desktops (*UEFI*: *Unified Extensible Firmware Interface*) to delete all data from a hard disk or Solid State Disc drives (SSDs).

With this function, all data from internal disks or SSDs can be irretrievably deleted before the hard disks or the whole system are disposed of. The function can also be used if hard disks are to be completely deleted, e.g. before installing a new operating system.



Further information on *Erase Disk* can be found on the Internet at "http://support.ts.fujitsu.com/download".

Software installation and restore

Installing new software

When installing programs or drivers, important files may be overwritten and modified. To be able to access the original data in the event of any problems following installation, you should backup your hard disk prior to installation.

Download current drivers/software

► Switch the device on.
► In the browser, select the address "http://www.fujitsu.com/fts/support".
► Select the desired product group, e.g. *Client Computing Devices*.
► In the *Downloads* area, select the entry *More Details*.
► Select your device via one of the available search options:
Automatic Product Detection

or

► *Serial number*

or

► *Product Search*

or

► *Browse For Product*

↳ A list of the available drivers, software, etc. is displayed.
► To see the valid versions and available options for your operating system, select the operating system desired under *Selected operating system*.
► Click on the desired drivers, desired software, etc.
► To start the download, click on *Direct download* after the desired option.
► Follow the instructions on the screen.

Problem solutions and tips



Refer to the safety notes in the "Safety/regulations" manual and in the "Getting started", Page 13 chapter when connecting or disconnecting cables.

If a fault occurs, try to rectify it in accordance with the measures described in the following documents:

- in this chapter
- in the documentation relating to the peripheral devices
- in the Help sections for the individual programs
- in the documentation for the operating system in use.

Help if problems occur

Should you encounter a problem with your computer that you cannot resolve yourself:

► Note the ID number of your device. The ID number is found on the type rating plate on the back, the underside or the top of the casing.

► Contact the Service Desk responsible for your country for clarification of the problem: "http://support.ts.fujitsu.com/contact/servicedesk". When you do this, please have ready the ID number and serial number of your system.

Troubleshooting

Power-on indicator remains unlit after you have switched on your device

Cause	Troubleshooting
The mains voltage supply is faulty.	► Check whether the power cable is plugged properly into the device and a grounded mains outlet.
Internal power supply overloaded.	► Pull the power plug of the device out of the mains outlet. ► Wait approx. 3 min. ► Plug the power plug into a properly grounded mains outlet again. ► Switch the device on.

The device cannot be switched off with the On/Off switch.

Cause	Troubleshooting
System crash	► Press the On/Off switch for at least 4 seconds, until the device switches off. Attention: Warning, this could lead to a loss of data! The Operating System is not shut-down properly in the process. Error messages are therefore possible the next time the system is booted.

Monitor remains blank

Cause	Remedy
Monitor is switched off	► Switch your monitor on.
Power saving has been activated (screen is blank)	► Press any key on the keyboard. **or** ► Deactivate the screen saver. If necessary, enter the appropriate password.
Brightness control is set to dark	► Adjust the brightness control. For detailed information, please refer to the operating manual supplied with your monitor.
Power cable not connected	► Switch off the monitor and the device. ► Check that the monitor power cable is properly connected to the monitor and to a grounded mains outlet or to the monitor socket of the device. ► Check that the device power cable is properly plugged into the device and a grounded mains outlet. ► Switch on the monitor and the device.
Monitor cable not connected	► Switch off the monitor and the device. ► Check that the monitor cable is properly connected to the device and monitor. ► Switch on the monitor and the device.
Incorrect setting for the monitor	► Restart the system. ► Press F8 while the system is booting. ► Start the system in Safe Mode. ► Set up the monitor as described in the documentation for your operating system and monitor.

No mouse pointer displayed on the screen

Cause	Remedy
The mouse is not correctly connected.	► Shut down your operating system in the proper manner, for instance using Ctrl + Alt + Del. ► Switch the device off. ► Check that the mouse cable is properly connected to the system unit. If you use an adapter or extension lead with the mouse cable, check the connections. ► Make sure that only one mouse is connected. ► Switch the device on.
Disabled USB ports	► Check in the *BIOS Setup* whether the used USB ports are *enabled* (see BIOS manual or manual for the mainboard).

Time and/or date is not correct

Cause	Remedy
Time and date are incorrect.	► Set the correct time and date within the operating system you are using. **or** ► Set the correct time and/or date in the *BIOS Setup*.
The lithium battery is empty.	► If the time and date are repeatedly wrong when you switch your device off and then on, change the lithium battery (see the "System expansions and repairs" manual).

Error messages on the screen

Error messages and their explanations are provided:

- in the technical manual for the mainboard
- in the documentation for the programs used

Tips

Topic	Tip
Out of system resources	► Close unnecessary applications. **or** ► Run the applications in a different order.

System expansions and repairs



Information on system expansions and repairs can be found on the Internet in the "System Expansions and Repairs" manual at "http://www.fujitsu.com/fts/support".

Operations that are distinguished in the manual as Only For Service, such as repairs to the device, may only however be performed by authorised service technicians. Incorrect repairs may greatly endanger the user (electric shock, fire risk) and will invalidate your warranty.

Technical data

FUJITSU Desktop ESPRIMO G5010 / G9010

Electrical data	
Protection class:	II
Nominal voltage:	19 V
Max. rated current:	3,42 A
Dimensions (vertical operating position)	
Width/depth/height (with foot):	68 mm x 165 mm x 156 mm / 2.67 inch x 6.48 inch x 6.13 inch
Width/depth/height (without foot):	36 mm x 165 mm x 147 mm / 1.42 inch x 6.48 inch x 5.79 inch
Dimensions (horizontal operating position)	
Width/depth/height (with adhesive feet):	147 mm x 165 mm x 39 mm / 5.79 inch x 6.48 inch x 1.52 inch
Width/depth/height (without adhesive feet):	147 mm x 165 mm x 36 mm / 5.79 inch x 6.48 inch x 1.42 inch
Weight	
in basic configuration:	approx. 0.77 kg / 1.70 lbs

Environmental conditions	
Climate class 3K2 Climate class 2K2	DIN EN 6072133 DIN EN 6072132
Temperature	
Operation (3K2)	15 °C .... 35 °C / 59 °F ... 95 °F
Transportation (2K2)	–25 °C .... 60 °C / –13 °F ... 140 °F
Condensation is not permitted during operation. Clearance required to ensure adequate ventilation:	
without ventilation openings	min. 10 mm / 0.39 inch
with ventilation openings	min. 200 mm / 7.87 inch (in the corresponding vertical or horizontal operating position, "Setting up the device", Page 14)
Maximum permissible operating height	3000 m (9842 ft), for China only 2000 m (6557 ft)

The data sheets for these devices provide further technical data. The data sheets can be found on the Internet at "http://www.fujitsu.com/fts/"

AC adapter

Electrical data	
Rated voltage:	100 – 240 V
Max. rated current:	1,8 A
Rated frequency:	50 – 60 Hz



Only the following adapters with Limited Power Source may be used:

- 65 W: S26113-E631-V75 model: A20-065N2A

Index

B
Base feet 14, 16
BIOS Setup
security functions 26

C
Components
installing/removing 32
Connecting
USB keyboard 20
Connecting a USB mouse 20
Contents of delivery 13

D
data
delete 27
Data protection 24
DC input connector
DC IN 11
Delete SATA hard disk 27
Device
Ports 19
transporting 8
Device,
setting up 14
switching off 23
switching on 23
transporting 8
upgrades 32
Devices,
connecting 20
Display port 19
Disposal 9

E
Energy saving 9
Erase Disk 27
Ergonomic
video workstation 14
External devices
Ports 19
External devices,
connecting 20

G
Getting started 13

H
Headphone port 10
Headphones 19
connecting 20
Horizontal operating position 16

I
Important notes 7
Installing,
software 21–22
switching on for the first time 21

L
LAN 18
LAN port 19
LAN socket 11
Line-out devices
connecting 20

M
Microphone
connecting 20
Microphone port 10
Monitor port 11
Monitor,
Connecting 20
switching off 23
switching on 23

N
Note
safety 7
Notes
important 7

O
Off switch 10
On switch 10
Operating position, horizontal 16
Operating position, vertical 14

P
Packaging 13
Packaging,
unpacking 13
PCI slot 11
PCIe slot 11
Ports 10, 19

Power cable
connection 18
Power-on indicator 10
Preparing for first use, overview 13
Preparing for operation 18
Preparing for use,
overview 13
Property protection 24
Protection, property and data 24

R
Re-transportation 8
Recycling 9
Retransportation 8

S
Safety notes 7
Security functions
BIOS Setup 26
Security Lock
Security Lock device 11
Servicing 32
Side cover 14
Software,
installing 21–22
Summary
Device 5
System expansion 32
System unit, see Device 8

T
Technical data 33
Transportation 8

U
Universal Serial Bus 19
Upgrades,
device 32
USB
ports 10
USB devices,
connecting 20
USB port 20
connecting keyboard 20
USB port,
connecting devices 20
USB ports 11

V
Vertical operating position 14
Video workstation 14