Washing Machine

User manual

WD9*TA***** / WD8*TA***** / WD7*TA*****

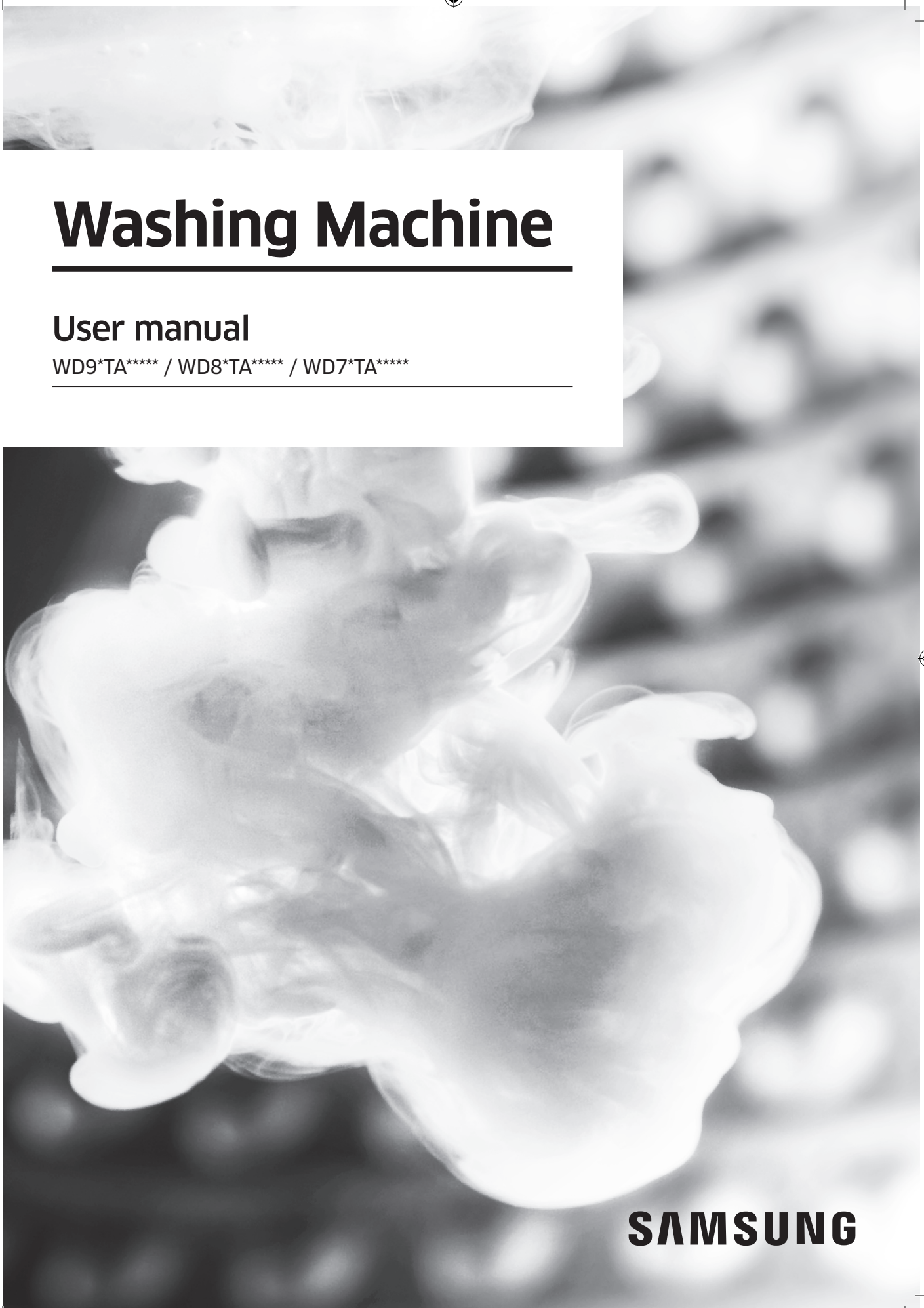

SAMSUNG

WD80TA046BE_04200B-00(v1)_EN.indd 1 2020/9/3 9:44:33

Contents

Safety information **4**

What you need to know about the safety instructions 4
Important safety symbols 4
Important safety precautions 5
Critical installation warnings 8
Installation cautions 9
Critical usage warnings 10
Usage cautions 11
Critical cleaning warnings 14
Instructions about the WEEE 15

Installation **16**

What's included 16
Installation requirements 18
Step-by-step installation 20

Before you start **30**

Initial settings 30
Laundry guidelines 30
Detergent recommendation 33
Detergent drawer guidelines 34

Operations **37**

Control panel 37
Simple steps to start 38
Drying Only 39
Cycle overview 40
Settings 44

WD80TA046BE_04200B-00(v1)_EN.indd 2 2020/9/3 9:44:34

Maintenance 45

Drum clean 45
Smart check 46
Emergency drain 47
Cleaning 48
Recovery from freezing 51
Care against an extended time of disuse 51

Troubleshooting 52

Checkpoints 52
Information codes 56

Specifications 59

Fabric care chart 59
Protecting the environment 60
Spare parts guarantee 60
Specification sheet 61

WD80TA046BE_04200B-00(v1)_EN.indd 3 2020/9/3 9:44:34

Safety information

Congratulations on your new Samsung washing machine. This manual contains important information on the installation, use and care of your appliance. Please take some time to read this manual to take full advantage of your washing machine's many benefits and features.

What you need to know about the safety instructions

Please read this manual thoroughly to ensure that you know how to safely and efficiently operate the extensive features and functions of your new appliance. Please store the manual in a safe location close to the appliance for future reference. Use this appliance only for its intended purpose as described in this instruction manual.
Warnings and Important Safety Instructions in this manual do not cover all possible conditions and situations that may occur. It is your responsibility to use common sense, caution and care when installing, maintaining and operating your washing machine.
Because the following operating instructions cover various models, the characteristics of your washing machine may differ slightly from those described in this manual and not all warning signs may be applicable. If you have any questions or concerns, contact your nearest service centre or find help and information online at www.samsung.com.

Important safety symbols

What the icons and signs in this user manual mean:

⚠ WARNING

Hazards or unsafe practices that may result in severe personal injury, death and/or property damage.

⚠ CAUTION

Hazards or unsafe practices that may result in personal injury and/or property damage.

NOTE

Indicates that a risk of personal injury or material damage exists.

Read the instructions

These warning signs are here to prevent injury to yourself and others.
Please follow them explicitly.
After reading this manual, store it in a safe place for future reference.

Read all instructions before using the appliance.

As with any equipment that uses electricity and moving parts, potential hazards exist. To safely operate this appliance, familiarize yourself with its operation and exercise care when using it.

WD80TA046BE_04200B-00(v1)_EN.indd 4 2020/9/3 9:44:34

Important safety precautions

⚠ WARNING

To reduce the risk of fire, electric shock, or injury to persons when using your appliance, follow basic precautions, including the following:

1. This appliance is not to be used by persons (including children) with reduced physical, sensory or mental capabilities, or lack of experience and knowledge, unless they have been given supervision or instruction concerning use of the appliance by a person responsible for their safety.
2. For use in Europe: This appliance can be used by children aged from 8 years and above and persons with reduced physical, sensory or mental capabilities or lack of experience and knowledge if they have been given supervision or instruction concerning use of the appliance in a safe way and understand the hazards involved. Children shall not play with the appliance. Cleaning and user maintenance shall not be made by children without supervision.
3. Children should be supervised to ensure that they do not play with the appliance.
4. If the supply cord is damaged, it must be replaced by the manufacturer, its service agent or similarly qualified persons in order to avoid a hazard.
5. The new hose-sets supplied with the appliance are to be used and that old hose-sets should not be reused.
6. For appliances with ventilation openings in the base, that a carpet must not obstruct the openings.

WD80TA046BE_04200B-00(v1)_EN.indd 5 2020/9/3 9:44:34

Safety information

7. For use in Europe: Children of less than 3 years should be kept away unless continuously supervised.
8. **CAUTION:** In order to avoid a hazard due to inadvertent resetting of the thermal cut-out, this appliance must not be supplied through an external switching device, such as a timer, or connected to a circuit that is regularly switched on and off by the utility.
9. The tumble dryer is not to be used if industrial chemicals have been used for cleaning.
10. The lint trap has to be cleaned frequently, if applicable.
11. Lint must not to be allowed to accumulate around the tumble dryer. (not applicable for appliances intended to be vented to the exterior of the building)
12. Adequate ventilation has to be provided to avoid the back flow of gases into the room from appliances burning other fuels, including open fires.
13. Do not dry unwashed items in the tumble dryer.
14. Items that have been soiled with substances such as cooking oil, acetone, alcohol, petrol, kerosene, spot removers, turpentine, waxes and wax removers should be washed in hot water with an extra amount of detergent before being dried in the tumble dryer.
15. Items such as foam rubber (latex foam), shower caps, waterproof textiles, rubber backed articles and clothes or pillows fitted with foam rubber pads should not be dried in the tumble dryer.
16. Fabric softeners, or similar products, should be used as specified by the fabric softener instructions.

WD80TA046BE_04200B-00(v1)_EN.indd 6 2020/9/3 9:44:34

17. The final part of a tumble dryer cycle occurs without heat (cool down cycle) to ensure that the items are left at a temperature that ensures that the items will not be damaged.
18. Remove all objects from pockets such as lighters and matches.
19. **WARNING:** Never stop a tumble dryer before the end of the drying cycle unless all items are quickly removed and spread out so that the heat is dissipated.
20. Exhaust air must not be discharged into a flue which is used for exhausting fumes from appliances burning gas or other fuels.
21. The appliance must not be installed behind a lockable door, a sliding door or a door with a hinge on the opposite side to that of the tumble dryer, in such a way that a full opening of the tumble dryer door is restricted.
22. **WARNING:** The appliance must not be supplied through an external switching device, such as a timer, or connected to a circuit that is regularly switched on and off by a utility.
23. This appliance is intended to be used in household only and it is not intended to be used such as:
    - staff kitchen areas in shops, offices and other working environments;
    - farm houses;
    - by clients in hotels, motels and other residential type environments;
    - bed and breakfast type environments;
    - areas for communal use in blocks of flats or in launderettes.

WD80TA046BE_04200B-00(v1)_EN.indd 7 2020/9/3 9:44:34

Safety information

Critical installation warnings

⚠ **WARNING**

The installation of this appliance must be performed by a qualified technician or service company.

- Failure to do so may result in electric shock, fire, an explosion, problems with the product, or injury.

The appliance is heavy, therefore take care when lifting it.

Plug the power cord into an AC 220 - 240 V / 50 Hz wall socket or higher and use the socket for this appliance only. Never use an extension cord.

- Sharing a wall socket with other appliances using a power strip or extending the power cord may result in electric shock or fire.
- Ensure that the power voltage, frequency, and current are the same as those of the product specifications. Failure to do so may result in electric shock or fire. Plug the power plug into the wall socket firmly.

Remove all foreign substances such as dust or water from the power plug terminals and contact points using a dry cloth on a regular basis.

- Unplug the power plug and clean it with a dry cloth.
- Failure to do so may result in electric shock or fire.
- Plug the power plug into the wall socket so that the cord is running towards the floor. If you plug the power plug into the socket in the opposite direction, the electric wires within the cable may be damaged and this may result in electric shock or fire.

Keep all packaging materials out of the reach of children as these may be dangerous.

- If a child places a bag over its head, it may suffocate.
  When the appliance, power plug or power cord is damaged, contact your nearest service centre.

This appliance must be properly grounded.

Do not ground the appliance to a gas pipe, plastic water pipe, or telephone line.

- This may result in electric shock, fire, an explosion, or problems with the product.
- Never plug the power cord into a socket that is not grounded correctly and make sure that it is in accordance with local and national regulations.

Do not install this appliance near a heater or any inflammable material.

Do not install this appliance in a humid, oily or dusty location, or in a location exposed to direct sunlight or water (rain drops).

Do not install this appliance in a location exposed to low temperatures.

- Frost may cause the tubes to burst.

WD80TA046BE_04200B-00(v1)_EN.indd 8 2020/9/3 9:44:34

Do not install this appliance in a location where gas may leak.
- This may result in electric shock or fire.

Do not use an electric transformer.
- This may result in electric shock or fire.

Do not use a damaged power plug, damaged power cord, or loose wall socket.
- This may result in electric shock or fire.

Do not pull or excessively bend the power cord.

Do not twist or tie the power cord.

Do not hook the power cord over a metal object, place a heavy object on the power cord, insert the power cord between objects, or push the power cord into the space behind the appliance.
- This may result in electric shock or fire.

Do not pull the power cord when unplugging the power plug.
- Unplug the power plug by holding the plug.
- Failure to do so may result in electric shock or fire.

This appliance should be positioned so that the power plug, the water supply taps, and the drain pipes are accessible.

Following the repair by a non-authorized service provider, self-repair or non-professional repair of the product, Samsung is not liable for any damage to the product, any injury or any other product safety issue caused by any attempt to repair the product which does not carefully follow these repair and maintenance instructions. Any damage to the product caused by an attempt to repair the product by any person other than a Samsung certifie service provider will not be covered by the warranty.

Installation cautions

⚠ CAUTION

This appliance should be positioned in such a way that the power plug is easily accessible.
- Failure to do so may result in electric shock or fire due to electric leakage.

Install your appliance on a solid, level floor that can support its weight.
- Failure to do so may result in abnormal vibrations, movement, noise, or problems with the product.

WD80TA046BE_04200B-00(v1)_EN.indd 9 2020/9/3 9:44:35

Safety information

Critical usage warnings

⚠ **WARNING**

If the appliance is flooded, turn off the water & power supplies immediately and contact your nearest service centre.

- Do not touch the power plug with wet hands.
- Failure to do so may result in electric shock.

If the appliance generates a strange noise, a burning smell, or smoke, unplug the power plug immediately and contact your nearest service centre.

- Failure to do so may result in electric shock or fire.

In the event of a gas leak (such as propane gas, LP gas, etc.), ventilate immediately without touching the power plug. Do not touch the appliance or power cord.

- Do not use a ventilating fan.
- A spark may result in an explosion or fire.

Do not let children play in or on the washing machine. In addition, when disposing of the appliance, remove the washing machine door lever.

- If trapped inside the product, children may suffocate to death.

Make sure to remove the packaging (sponge, styrofoam) attached to the bottom of the washing machine before using it.

Do not wash items contaminated with gasoline, kerosene, benzene, paint thinner, alcohol or other inflammable or explosive substances.

- This may result in electric shock, fire, or an explosion.

Do not open the washing machine door by force while it is operating (high-temperature washing/drying/spinning).

- Water flowing out of the washing machine may result in burns or cause the floor to be slippery. This may result in injury.
- Opening the door by force may result in damage to the product or injury.

Do not insert your hand under the washing machine while an operation is in progress.

- This may result in injury.

Do not touch the power plug with wet hands.

- This may result in electric shock.

Do not turn the appliance off by unplugging the power plug while an operation is in progress.

- Plugging the power plug into the wall socket again may cause a spark and result in electric shock or fire.

Do not let children climb in or onto the appliance.

WD80TA046BE_04200B-00(v1)_EN.indd 10 2020/9/3 9:44:35

- This may result in electric shock, burns or injury.

Do not insert your hand or a metal object under the washing machine while it is operating.
- This may result in injury.

Do not unplug the appliance by pulling the power cord. Always grip the plug firmly and pull it straight out of the outlet.
- Damage to the power cord may cause a short-circuit, fire and/or electric shock.

Do not attempt to repair, disassemble, or modify the appliance yourself.
- Do not use a fuse (such as copper, steel wire, etc.) other than a standard fuse.
- When the appliance needs to be repaired or reinstalled, contact your nearest service centre.
- Failure to do so may result in electric shock, fire, problems with the product, or injury.

If the water supply hose comes loose from the water tap and floods the appliance, unplug the power plug.
- Failure to do so may result in electric shock or fire.

Unplug the power plug when the appliance is not being used for long periods of time or during a thunder or lightning storm.
- Failure to do so may result in electric shock or fire.

If any foreign substance enters into the appliance, unplug the power plug and contact you nearest Samsung Customer Service.
- This may result in electric shock or fire.

Do not let children (or pets) play in or on your washing machine. The washing machine door does not open easily from the inside and children may be seriously injured if trapped inside.

Usage cautions

⚠ CAUTION

When the washing machine is contaminated by a foreign substance such as detergent, dirt, food waste, etc., unplug the power plug and clean the washing machine using a damp, soft cloth.
- Failure to do so may result in discolouration, deformation, damage, or rust.

The front glass may be broken by a strong impact. Take care when using the washing machine.
- If the glass is broken, it may result in injury.

After a water supply failure or when reconnecting the water supply hose, open the water tap slowly.

WD80TA046BE_04200B-00(v1)_EN.indd 11 2020/9/3 9:44:35

Safety information

Open the water tap slowly after a long period of non-use.

- The air pressure in the water supply hose or the water pipe may damage a product part or result in a water leak.

If a draining error occurs during an operation, check if there is a draining problem.

- If the washing machine is used when it is flooded because of a draining problem, it may result in electric shock or fire.

Insert the laundry into the washing machine completely so that the laundry does not get caught in the door.

- If laundry gets caught in the door, it may result in damage to the laundry or the washing machine, or result in a water leak.

Turn the water supply off when the washing machine is not being used.

Ensure that the screws on the water supply hose connector are properly tightened.

- Failure to do so may result in property damage or injury.

Ensure that the rubber seal and front door glass are not contaminated by a foreign substance (e.g. waste, thread, hair, etc.).

- If a foreign substance is caught in the door or the door is not completely closed, it may cause a water leak.

Open the water tap and check if the water supply hose connector is firmly tightened and that there is no water leak before using the product.

- If the screws on the water supply hose connector are loose, it may result in a water leak.

The product you have purchased is designed for domestic use only.

Using the product for business purposes qualifies as a product misuse. In this case, the product will not be covered by the standard warranty provided by Samsung and no responsibility can be attributed to Samsung for malfunctions or damages resulting from such misuse.

Do not stand on the appliance or place objects (such as laundry, lighted candles, lighted cigarettes, dishes, chemicals, metal objects, etc.) on the appliance.

- This may result in electric shock, fire, problems with the product, or injury.

Do not spray volatile material such as insecticide onto the surface of the appliance.

- As well as being harmful to humans, this may result in electric shock, fire or problems with the product.

Do not place objects that generate electromagnetic fields near the washing machine.

- This may result in injury due to a malfunction.

Water drained during a high-temperature wash or drying cycle is hot. Do not touch the water.

- This may result in burns or injury.

WD80TA046BE_04200B-00(v1)_EN.indd 12 2020/9/3 9:44:35

Do not wash, spin, or dry water-proof seats, mats, or clothing (*) unless your appliance has a special cycle for washing these items.

(*): Woollen bedding, rain covers, fishing vests, ski pants, sleeping bags, diaper covers, sweat suits, and bicycle, motor cycle and car covers, etc.

- Do not wash thick or hard mats even if the washing machine mark is on the care label. This may result in injury or damage to the washing machine, walls, floor, or clothing due to abnormal vibrations.
- Do not wash throw rugs or doormats with rubber backing. The rubber backing may come off and stick to inside the drum, and this may result in malfunction such as a drainage error.

Do not operate the washing machine when the detergent drawer is removed.

- This may result in electric shock or injury due to a water leak.

Do not touch the insides of the drum during or just after drying as it is hot.

- This may result in burns.

The door glass becomes hot during washing and drying. Therefore, do not touch the door glass.

Also, do not allow children to play around the washing machine or touch the door glass.

- This may result in burns.

Do not insert your hand into the detergent drawer.

- This may result in injury as your hand may be caught by the detergent input device.
- The liquid detergent guide (applicable models only) is not used for powder detergent. Remove the guide when using powder detergent.

Do not place any objects (such as shoes, food waste, animals) other than laundry into the washing machine.

- This may result in damage to the washing machine, or injury and death in the case of pets due to the abnormal vibrations.

Do not press the buttons using sharp objects such as pins, knifes, fingernails, etc.

- This may result in electric shock or injury.

Do not wash laundry contaminated by oils, creams or lotions usually found in skincare shops or massage clinics.

- This may cause the rubber seal to become deformed and result in a water leak.

Do not leave metal objects such as safety pins, hair pins or bleach in the drum for long periods of time.

- This may cause the drum to rust.
- If rust starts appearing on the surface of the drum, apply a (neutral) cleansing agent to the surface and use a sponge to clean it. Never use a metal brush.

WD80TA046BE_04200B-00(v1)_EN.indd 13 2020/9/3 9:44:35

Safety information

Do not use dry cleaning detergent directly and do not wash, rinse, or spin laundry contaminated by dry cleaning detergent.

- This may result in spontaneous combustion or ignition due to the heat from the oxidation of the oil.

Do not use water from water cooling/heating devices.

- This may result in problems with the washing machine.

Do not use natural hand-washing soap for the washing machine.

- If it hardens and accumulates inside the washing machine, it may result in problems with the product, discolouration, rust, or bad odours.

Place socks and brassieres in a washing net and wash them with the other laundry.

Do not wash large laundry items such as bedding in the washing net.

- Failure to do so may result in injury due to abnormal vibrations.

Do not use hardened detergent.

- If it accumulates inside the washing machine, it may result in a water leak.

Make sure that the pockets of all the clothing items to be washed are empty.

- Hard, sharp objects such as coins, safety pins, nails, screws, or stones can cause extensive damage to the appliance.

Do not wash clothing with large buckles, buttons or other heavy metal objects.

Sort the laundry by color on the basis of its colorfastness and select the recommended cycle, water temperature and additional functions.

- This may result in discoloration or fabric damage.

Take care that children's fingers are not caught in the door when you close it.

- Failure to do so may result in injury.

To prevent odours and mould, leave the door open after a wash cycle to allow the drum to dry.

To prevent limescale build up, leave the detergent drawer open after a wash cycle and dry inside it.

Critical cleaning warnings

⚠ **WARNING**

Do not clean the appliance by spraying water directly onto it.

Do not use the a strong acidic cleaning agent.

WD80TA046BE_04200B-00(v1)_EN.indd 14 2020/9/3 9:44:35

Do not use benzene, thinner or alcohol to clean the appliance.

- This may result in discolouration, deformation, damage, electric shock or fire.

Before cleaning or performing maintenance, unplug the appliance from the wall socket.

- Failure to do so may result in electric shock or fire.

Instructions about the WEEE

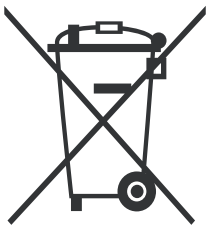

Correct Disposal of This Product (Waste Electrical & Electronic Equipment)

(Applicable in countries with separate collection systems)

This marking on the product, accessories or literature indicates that the product and its electronic accessories (e.g. charger, headset, USB cable) should not be disposed of with other household waste at the end of their working life. To prevent possible harm to the environment or human health from uncontrolled waste disposal, please separate these items from other types of waste and recycle them responsibly to promote the sustainable reuse of material resources.
Household users should contact either the retailer where they purchased this product, or their local government office, for details of where and how they can take these items for environmentally safe recycling.
Business users should contact their supplier and check the terms and conditions of the purchase contract. This product and its electronic accessories should not be mixed with other commercial wastes for disposal.

For information on Samsung's environmental commitments and product regulatory obligations, e.g. REACH, WEEE or Batteries, visit our sustainability page available via www.samsung.com

WD80TA046BE_04200B-00(v1)_EN.indd 15 2020/9/3 9:44:35

Installation

Follow these instructions carefully to ensure proper installation of the washing machine and to prevent accidents when doing laundry.

What's included

Make sure all the parts are included in the product package. If you have a problem with the washing machine or the parts, contact a local Samsung customer centre or the retailer.

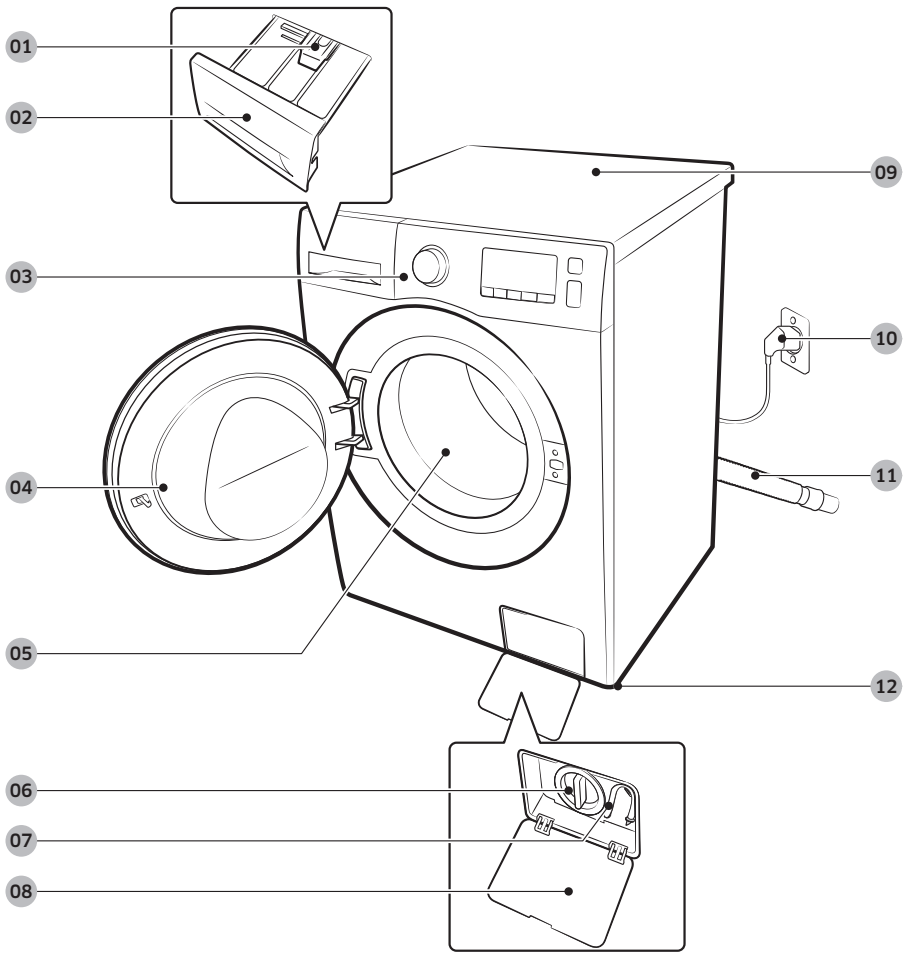

01 Release lever
02 Detergent drawer
03 Control panel
04 Door
05 Drum
06 Lint filter
07 Emergency drain tube
08 Filter cover
09 Worktop
10 Power plug
11 Drain hose
12 Levelling feet

WD80TA046BE_04200B-00(v1)_EN.indd 16 2020/9/3 9:44:35



Spanner



Bolt caps

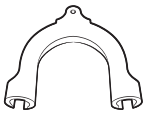

Hose guide



Cold water hose



Hot water hose

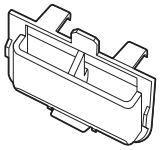

Liquid detergent container

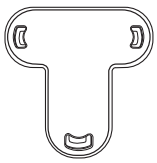

Cap fixer

NOTE

- Spanner: For removing the shipping bolts and levelling the washing machine.
- Bolt caps : For covering the holes after removing the shipping bolts. The provided number of bolt caps (3 to 6) depends on the model.
- Hose guide: For hanging the drain hose in the drainpipe or wash-basin.
- Cold/Hot water hose: For supplying water to the washing machine. (Hot water hoses is for applicable models only.)
- Liquid detergent guide: Insert it in the detergent compartment to use liquid detergent. (Applicable models only)

WD80TA046BE_04200B-00(v1)_EN.indd 17 2020/9/3 9:44:35

Installation

Installation requirements

Electrical supply and grounding

- AC 220-240 V / 50 Hz fuse or circuit breaker is required
- Use an individual branch circuit specific to the washing machine

To ensure proper grounding, the washing machine comes with a power cord featuring a three-prong grounding plug for use in a properly installed and grounded outlet. Check with a qualified electrician or serviceperson if you are not sure about the grounding.
Do not modify the provided plug. If it does not fit the outlet, call a qualified electrician to install a proper outlet.

⚠ WARNING

- Do NOT use an extension cord.
- Use only the power cord that comes with the washing machine.
- Do NOT connect the ground wire to plastic plumbing, gas lines, or hot water pipes.
- Improperly connected grounding conductors may cause electric shock.

Water supply

A proper water pressure for this washing machine is between 50 kPa and 800 kPa. Water pressure less than 50 kPa may cause the water valve not to close completely. Or, it may take longer to fill the drum, causing the washing machine to turn off. Water taps must be within 120 cm from the rear of the washing machine so that the provided inlet hoses reach the washing machine.
To reduce the risk of leaks:

- Make sure water taps are easily accessible.
- Turn off the taps when the washing machine is not in use.
- Check for any leaks at the water inlet hose fittings on a regular basis.

⚠ CAUTION

Before using the washing machine for the first time, check all connections at the water valve and taps for any leaks.

Drain

Samsung recommends a standpipe in height of 60~90 cm. The drain hose must be connected through the hose clip to the standpipe, and the standpipe must fully cover the drain hose.

WD80TA046BE_04200B-00(v1)_EN.indd 18 2020/9/3 9:44:36

Flooring

For best performance, the washing machine must be installed on a solid floor. Wood floors may need to be reinforced to minimize vibration and/or unbalanced loads. Carpeting and soft tile surfaces are not a good resistance to vibrations and may cause the washing machine to move slightly during the spin cycle.

⚠ CAUTION

Do NOT install the washing machine on a platform or a poorly supported structure.

Water temperature

Do not install the washing machine in areas where water may freeze as the washing machine always retains some water in its water valves, pumps, and/or hoses. Frozen water left in the connection parts may cause damage to belts, the pump, and other components of the washing machine.

Alcove or closet installation

Minimum clearance for stable operation:

Sides	25 mm	Rear	50 mm
Top	25 mm	Front	550 mm

If both the washing machine and a dryer are installed in the same location, the front of the alcove or closet must have at least a 550 mm unobstructed air opening. Your washing machine alone does not require a specific air opening.

WD80TA046BE_04200B-00(v1)_EN.indd 19 2020/9/3 9:44:36

Installation

Step-by-step installation

STEP 1 Select a location

Location requirements:

- Solid, level surface without carpeting or flooring that may obstruct ventilation
- Away from direct sunlight
- Adequate room for ventilation and wiring
- The ambient temperature is always higher than the freezing point (0 ˚C)
- Away from a heat source

STEP 2 Remove the shipping bolts

Unpack the product package and remove all shipping bolts.

NOTE

Number of shipping bolts may differ depending on the model.

WARNING

- Packaging materials can be dangerous to children. Dispose all packaging material (plastic bags, polystyrene, etc.) out of children's reach.
- To avoid injury, cover the holes with bolt caps after removing the shipping bolts. Do not move the washing machine without the shipping bolts in place. Assemble the shipping bolts before moving the washing machine to another location. Keep the shipping bolts in a safe place for future use.

WD80TA046BE_04200B-00(v1)_EN.indd 20 2020/9/3 9:44:36

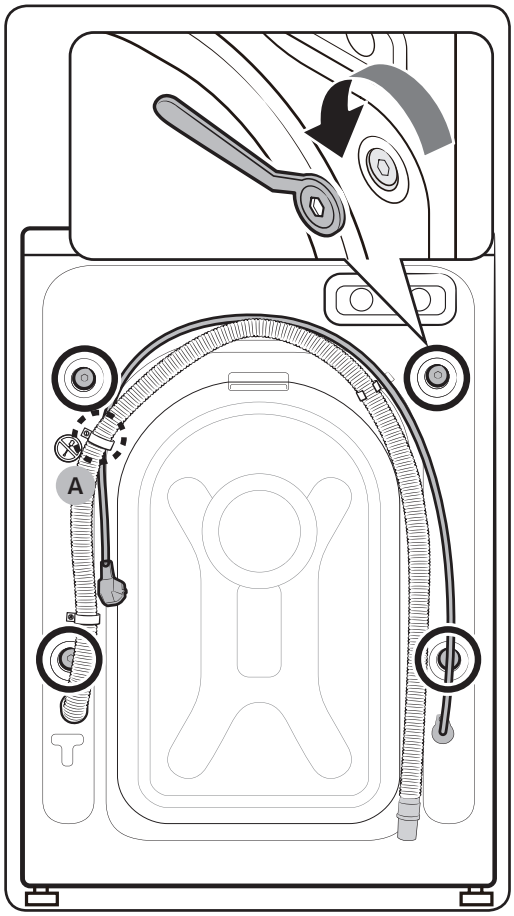

1. Locate the shipping bolts (marked with circle in the figure) on the rear side of the washing machine.

⚠ CAUTION

Do not remove the screw (A) that fixes the hose clip.

2. Using the supplied spanner, loosen all the shipping bolts by turning them counterclockwise.

NOTE

You must keep the shipping bolts for future use.

WD80TA046BE_04200B-00(v1)_EN.indd 21 2020/9/3 9:44:36

Installation

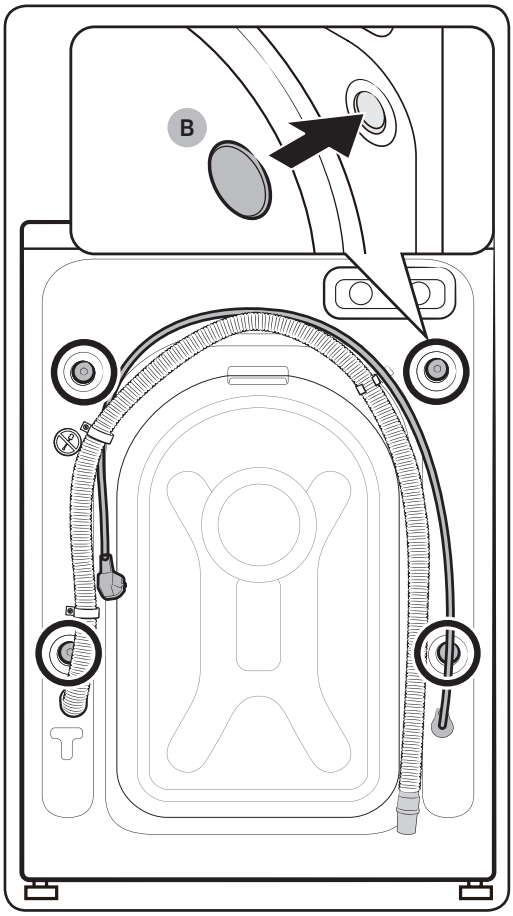

3. Insert the **bolt caps (B)** to the holes (marked with circle in the figure).

STEP 3 Adjust the levelling feet

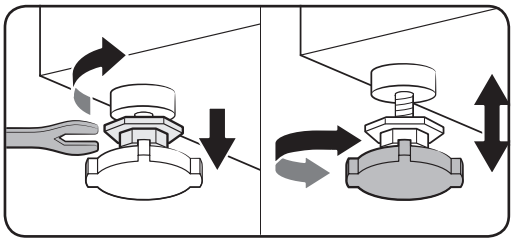

1. Gently slide the washing machine into position. Excessive force may damage the levelling feet.

2. Level the washing machine by manually adjusting the levelling feet.

WD80TA046BE_04200B-00(v1)_EN.indd 22 2020/9/3 9:44:37

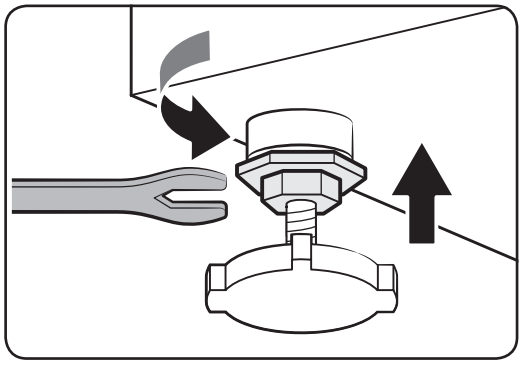

3. When levelling is complete, tighten the nuts using the spanner.

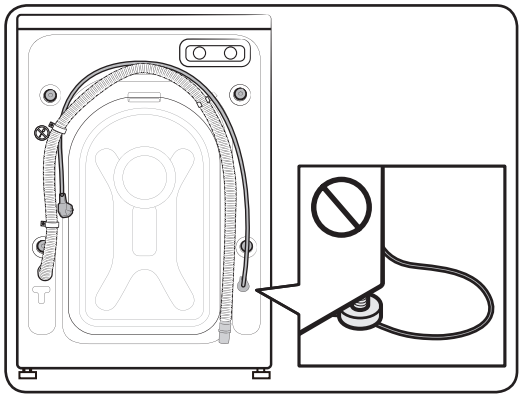

⚠ CAUTION

When installing the product make sure the levelling feet is not pressing the power cord.

⚠ CAUTION

Make sure all the levelling feet are seating on the floor surface to avoid the washing machine from moving or generating noise due to vibration Then, check if the washing machine is not rocking. If the washing machine is not rocking, tighten the nuts.

WD80TA046BE_04200B-00(v1)_EN.indd 23 2020/9/3 9:44:37

Installation

STEP 4 Connect the water hose

The provided water hose may differ depending on the model. Please follow the instruction according to the provided water hose.

Connecting to a threaded water tap

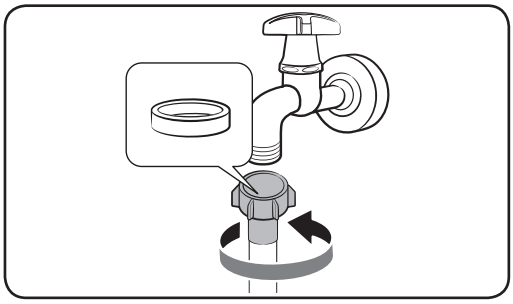

1. Connect the water hose to the water tap, and then turn the connector clockwise as shown.

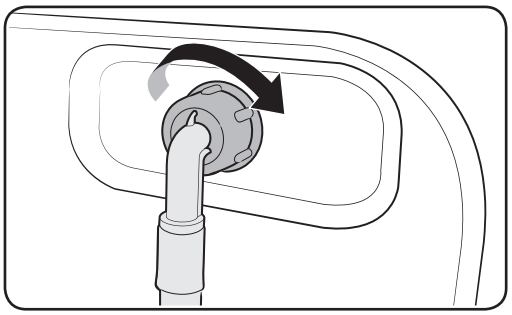

2. Connect the other end of the water hose to the inlet valve on the back of the washing machine. Turn the hose clockwise to tighten.

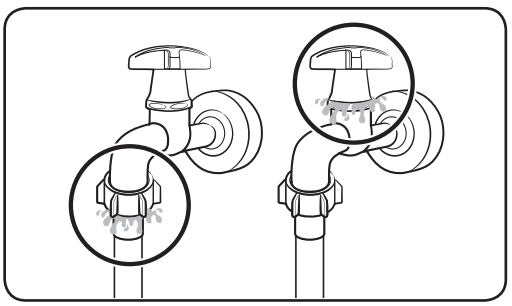

3. Open the water tap and check if there are any leaks around the connection areas. If there are water leaks, repeat the steps above.

⚠ WARNING

If there is a water leak, stop operating the washing machine and disconnect from the electrical supply. Then, contact a local Samsung service centre in case of a leak from the water hose, or contact a plumbing technician in case of a leak from the water tap. Otherwise, this may cause electric shock.

WD80TA046BE_04200B-00(v1)_EN.indd 24 2020/9/3 9:44:37

⚠ **CAUTION**

Do not stretch the water hose by force. If the hose is too short, replace the hose with a longer, high-pressure hose.

Connecting to a non-threaded water tap

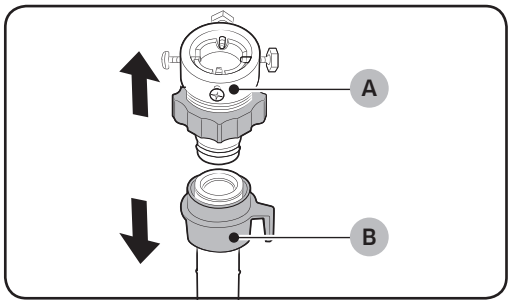

1. Remove the **adaptor (A)** from the water **hose (B)**.

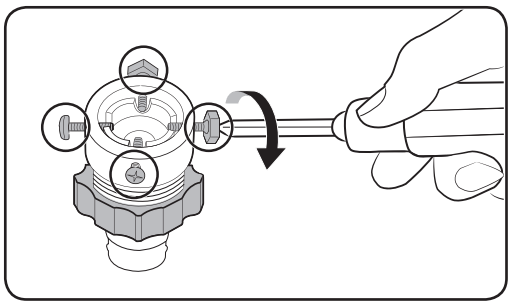

2. Use a Phillips screwdriver to loosen four screws on the adaptor.

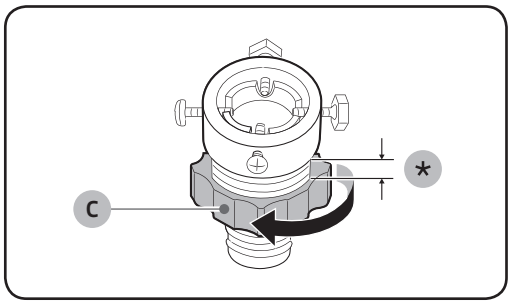

3. Hold the adaptor and turn **part (C)** in the arrow direction to loosen it by 5 mm (*).

WD80TA046BE_04200B-00(v1)_EN.indd 25 2020/9/3 9:44:37

Installation

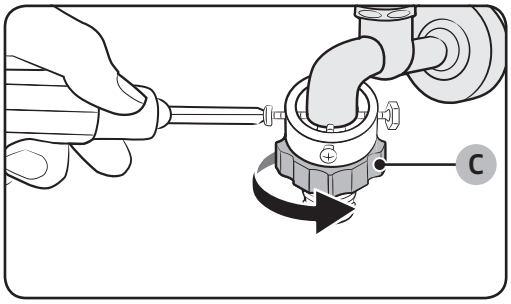

4. Insert the adaptor onto the water tap, and then tighten the screws while lifting the adaptor.
5. Turn part (C) in the arrow direction to tighten it.

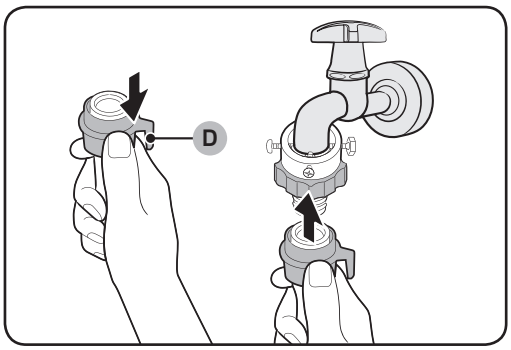

6. While pulling down part (D) on the water hose, connect the water hose to the adaptor. Then, release part (D). The hose fits into the adaptor with a clicking sound.

7. To complete connecting the water hose, see 2 and 3 on the "Connecting to a threaded water tap" section.

NOTE

- After connecting the water hose to the adaptor, pull the water hose down to check if it is connected properly.
- Use a popular type of water taps. If the tap is square-shaped or too big, remove the spacer ring before inserting the tap into the adaptor.

WD80TA046BE_04200B-00(v1)_EN.indd 26 2020/9/3 9:44:38

For models with an additional hot water inlet:

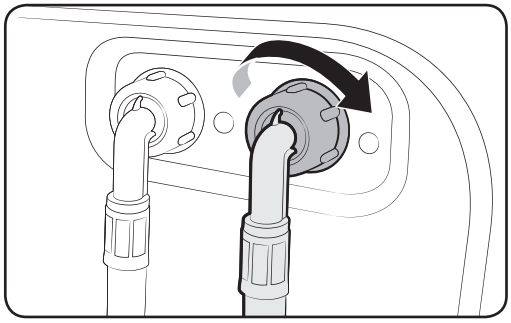

1. Connect the red end of the hot water hose to the hot water inlet on the back of the machine.
2. Connect the other end of the hot water hose to the hot water tap.

Aqua stop hose (applicable models only)

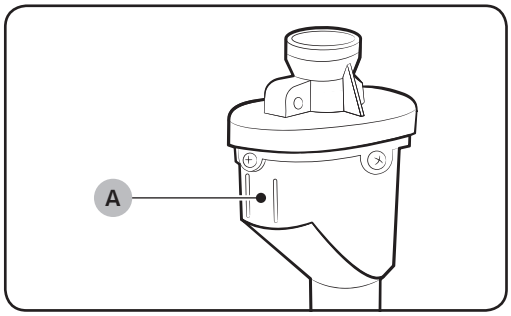

The aqua stop hose alerts users of a risk of water leaks. It senses the water flow and turns red on the centre indicator (A) in case of a leak.

NOTE

The end of the aqua stop hose must be fitted to the water tap and not the machine.

WD80TA046BE_04200B-00(v1)_EN.indd 27 2020/9/3 9:44:38

Installation

STEP 5 Position the drain hose

The drain hose can be positioned in three ways:

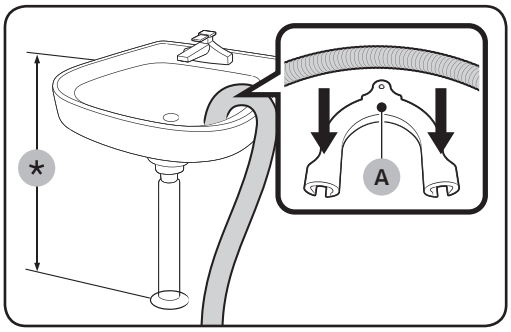

Over the edge of a wash basin

The drain hose must be placed at a height of between 60 cm and 90 cm (*) from the floor. To keep the spout of the drain hose bent, use the supplied plastic hose guide (A). Secure the guide to the wall using a hook to ensure stable drainage.

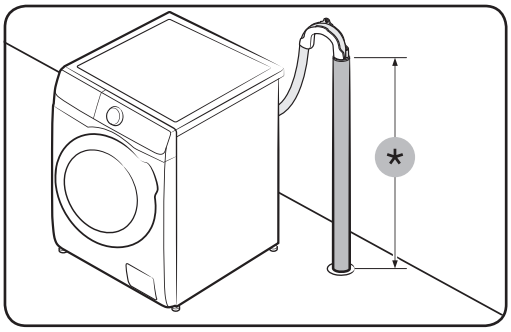

In a drain pipe

The drain pipe should be between 60 cm and 90 cm high (*). It is advisable to use a 65 cm high vertical pipe.

- To ensure the drain hose stays in position, use the plastic hose guide provided (see the figure).
- To prevent the siphoning of water flow during drainage, make sure to insert the drain hose 15 cm in the drain pipe.
- To prevent the drain hose from moving around, secure the hose guide to the wall.

Drain standpipe requirements:

- Minimum diameter of 5 cm
- Minimum carry-away capacity of 60 litres per minute

WD80TA046BE_04200B-00(v1)_EN.indd 28 2020/9/3 9:44:38

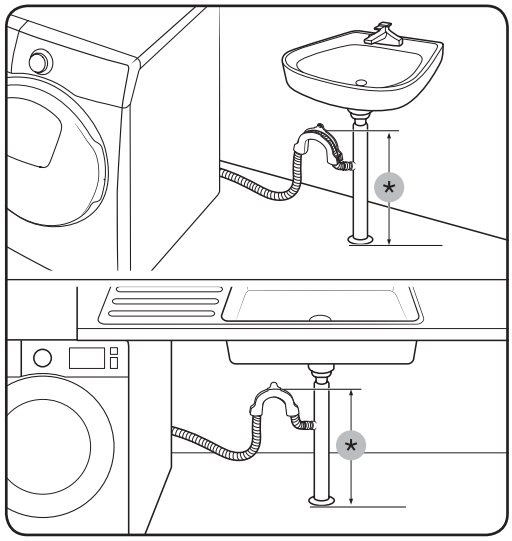

In a sink drain pipe branch

The drain pipe branch mush be above the sink siphone so that the end of the hose is at least 60 cm above the ground.
(*) : 60 cm

⚠ CAUTION

Remove the lid on the sink drain pipe branch before connecting the drain pipe to it.

STEP 6 Turn on the washing machine

Plug the power cord into a wall socket featuring an AC 220-240 V / 50 Hz approved electrical outlet protected by a fuse or circuit breaker. Then, press **Power** to turn on the washing machine.

WD80TA046BE_04200B-00(v1)_EN.indd 29 2020/9/3 9:44:38

Before you start

Initial settings

Run Calibration (recommended)

Calibration ensures accurate weight detection by the washing machine. Make sure the drum is empty before running Calibration.

1. Power off, and then power on the washing machine.
2. Hold down Temp. and Delay End simultaneously for 3 seconds to enter Calibration mode. The "CB" message appears.
3. Press Start/Pause to run the Calibration cycle.
4. The drum will rotate clockwise and counter-clockwise for about 3 minutes.
5. When the cycle is complete, "0" appears on the display and the washing machine will turn off automatically.
6. The washing machine is now ready for use.

Laundry guidelines

STEP 1 Sort

Sort the laundry according to these criteria:

- Care Label: Sort the laundry into cottons, mixed fibres, synthetics, silks, wools, and rayon.
- Colour: Separate whites from colours.
- Size: Mixing different-sized items together in the drum improves the washing performance.
- Sensitivity: Wash delicate items separately using an Easy Iron option for pure, new woollen items, curtains, and silk items. Check the labels on the items.

NOTE

Make sure to check the care label on the clothing, and sort them accordingly before starting the wash.

STEP 2 Empty pockets

Empty all the pockets of your laundry items

- Metal objects such as coins, pins, and buckles on clothing may damage other laundry items as well as the drum.

WD80TA046BE_04200B-00(v1)_EN.indd 30 2020/9/3 9:44:38

Turn clothing with buttons and embroideries inside out

- If pants or jacket zippers are open while washing, the drum may be damaged. Zippers should be closed and fixed with a string.
- Clothing with long strings may become entangled with other clothes. Make sure to tie the strings before starting the wash.

STEP 3 Use a laundry net

- Brassieres (water washable) must be placed in a laundry net. Metal parts of the brassieres may break through and tear other laundry items.
- Small, light clothing such as socks, gloves, stockings, and handkerchiefs may become caught around the door. Place them inside a fine laundry net.
- Do not wash the laundry net by itself without other laundry. This may cause abnormal vibrations that could move the washing machine and result in injury.

STEP 4 Prewash (if necessary)

Select the Prewash option for the selected cycle if the laundry is heavily soiled. Do not use the Prewash option when detergent is manually added into the drum.

STEP 5 Determine the load capacity

Do not overload the washing machine. Overloading may cause the washing machine to not wash properly. For the load capacity for the type of clothing, see page 40.

NOTE

When washing bedding or bedding covers, the wash time may be lengthened or the spin efficiency may be reduced. For bedding or bedding covers, the recommended maximum spin cycle speed is 800 rpm, and the load capacity is 2.0 kg or less.

CAUTION

- Unbalanced laundry may reduce the spinning performance.
- Make sure the laundry is fully inserted in the drum and not caught in the door.
- Do not slam the door. Close the door gently. Otherwise, the door may not be closed properly.

STEP 6 Apply a proper detergent type

The type of detergent depends on the type of fabric (cotton, synthetic, delicate items, wool), colour, wash temperature, and degree of soiling. Always use “low suds” laundry detergent, which is designed for automatic washing machines.

WD80TA046BE_04200B-00(v1)_EN.indd 31 2020/9/3 9:44:38

Before you start

NOTE

- Follow the detergent manufacturer's recommendations based on the weight of the laundry, the degree of soiling, and the hardness of the water in your local area. If you are not sure about the water hardness, contact a local water authority.
- Do not use detergent that tends to be hardened or solidified. This detergent may remain after the rinse cycle, blocking the drain outlet.

CAUTION

When washing wool using the WOOL/DELICATES cycle, use only a neutral liquid detergent. If used with the WOOL/DELICATES cycle, powder detergent may remain on the laundry and discolour the laundry.

Laundry capsules

To get the best results from using laundry capsules, please follow these instructions.

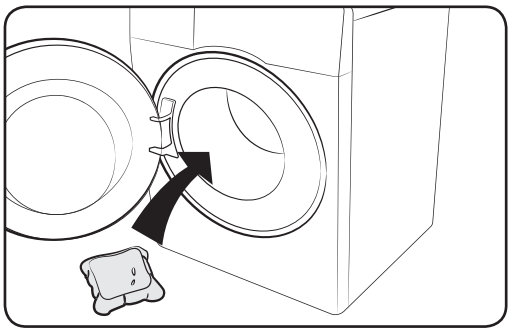

1. Put the capsule in the bottom of the empty drum towards the rear.

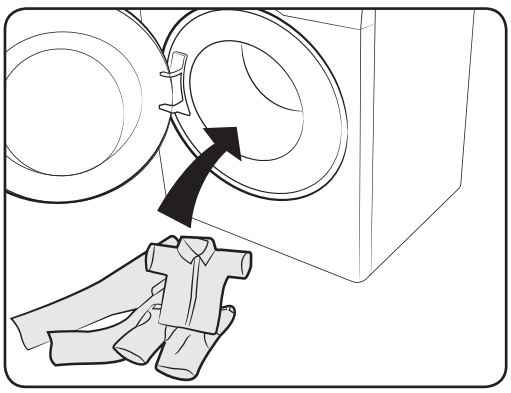

2. Put the laundry in the drum on top of the capsule.

CAUTION

For cycles using cold water or cycles that complete in less than one hour, the capsule may not dissolve completely.

WD80TA046BE_04200B-00(v1)_EN.indd 32 2020/9/3 9:44:39

Detergent recommendation

The recommendations apply to the temperature ranges given in the cycle chart.

●	Recommended	▲	Liquid detergent only
–	Not recommended	△	Powder detergent only

Cycle	Detergent		
	Universal	Delicates and woollens	Specialist
ECO 40-60	●	–	–
COTTON	●	–	–
SYNTHETICS	●	–	–
INTENSE COLD	●	–	–
HYGIENE STEAM	●	–	–
DRUM CLEAN	–	–	–
15' QUICK WASH	●	–	–
MIXED LOAD	●	–	–
WOOL/DELICATES	–	▲	▲
WASH+DRY	●	–	–

WD80TA046BE_04200B-00(v1)_EN.indd 33 2020/9/3 9:44:39

Before you start

Detergent drawer guidelines

The washing machine provides a three-compartment dispenser: the left compartment for the main wash, the centre compartment for fabric softeners, and the right compartment for the preliminary wash.

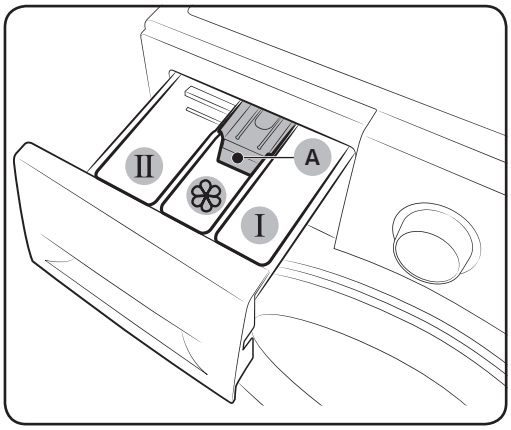

01 I **Prewash compartment:** Apply prewash detergent.

02 II **Main-wash compartment:** Apply main-wash detergent, water softener, soaking detergent, bleach, and/or stain removers.

03 ❀ **Softener compartment:** Apply additives such as fabric softener. Do not exceed the **max line (A)**.

⚠ CAUTION

- Do not open the detergent drawer while the washing machine is operating.
- Do not use the following types of detergent:
  - Tablet or capsule types
  - Ball or net types
- To prevent the compartment clogging, concentrated or highly-enriched agents (fabric softener or detergent) must be diluted with water before being applied.
- When Delay End is selected, do not apply detergent directly into the drum. Otherwise, this may discolour the laundry. Use the detergent drawer when Delay End is selected.
- Do not use any cleaning agents for cleaning the drum. Chemical residue in the drum deteriorates the washing performance.

To apply washing agents to the detergent drawer

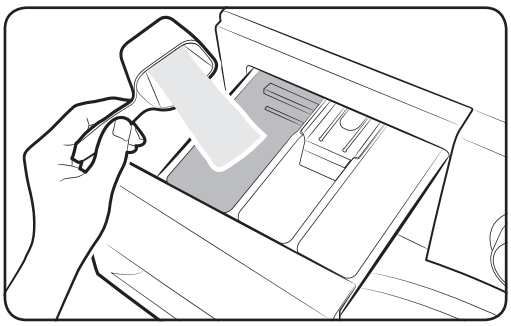

1. Slide open the detergent drawer.
2. Apply laundry detergent to the II. **main-wash compartment** as instructed or recommended by the manufacturer. To use liquid detergent, see page **36.**

WD80TA046BE_04200B-00(v1)_EN.indd 34 2020/9/3 9:44:39

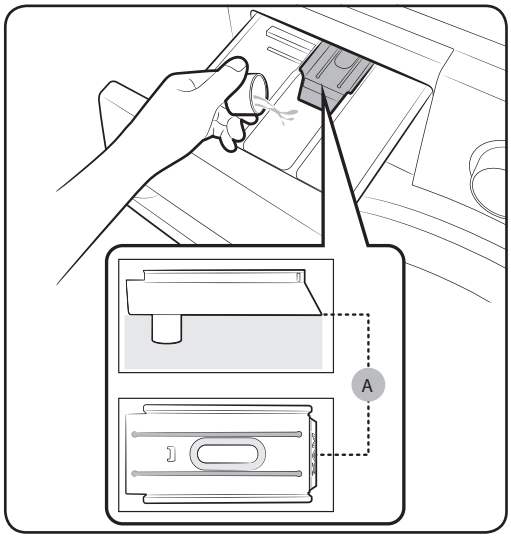

3. Apply fabric softener to the softener compartment. Do not exceed the max line (A).

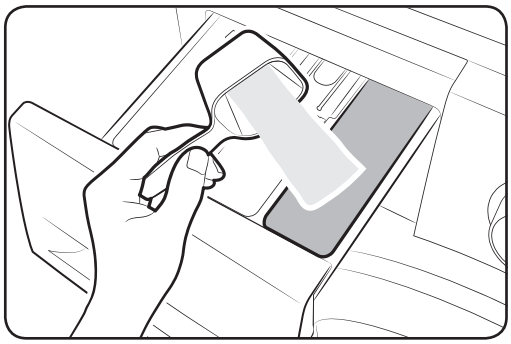

4. If you want to prewash, apply prewash detergent to the I prewash compartment as instructed or recommended by the manufacturer.
5. Close the detergent drawer.

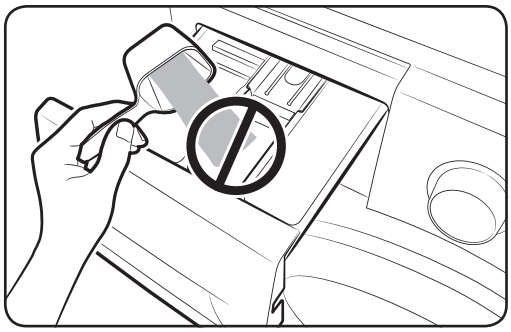

⚠ CAUTION

- Do not apply powder detergent to the liquid container.
- Concentrated fabric softener must be diluted with water before applied.
- Do not apply main-wash detergent to the softener compartment.

WD80TA046BE_04200B-00(v1)_EN.indd 35 2020/9/3 9:44:39

Before you start

To use liquid detergent (applicable models only)

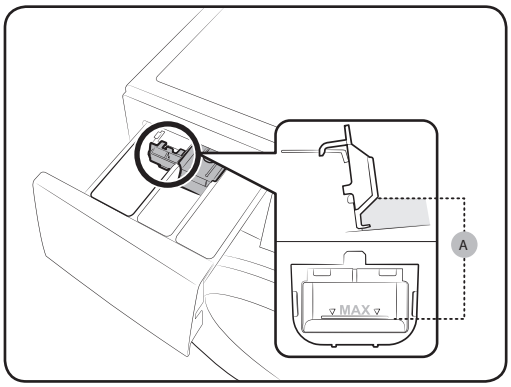

First insert the provided liquid container in the II **main-wash compartment**. Then, apply liquid detergent to the container below the marked **max line (A)**.

⚠ CAUTION

- Do not exceed the max line that is marked inside the container.
- Turn up the liquid container if using powder detergent.

When using liquid detergent

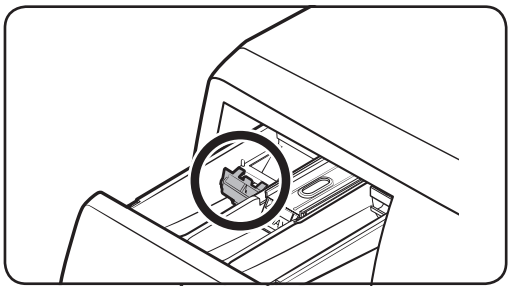

When using powder detergent

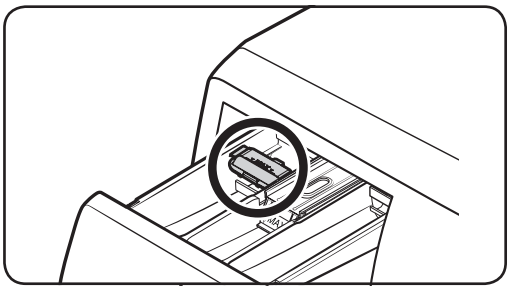

WD80TA046BE_04200B-00(v1)_EN.indd 36 2020/9/3 9:44:39

Operations

Control panel

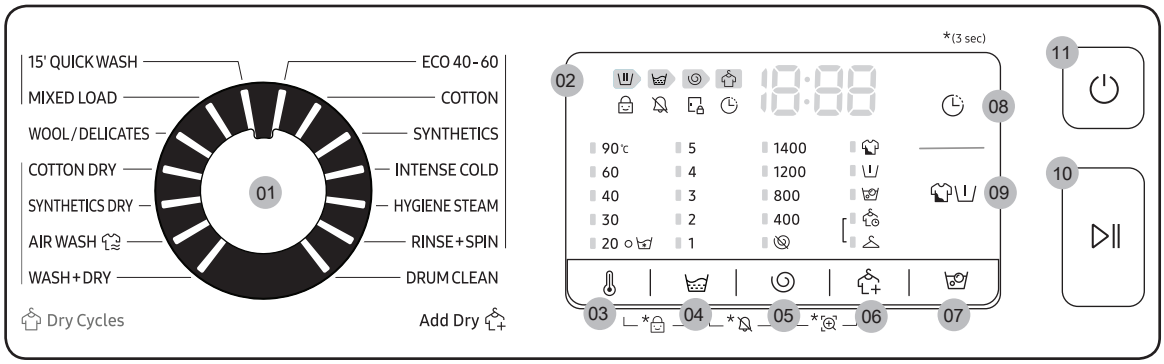

01 Cycle Selector	Turn the dial to select a cycle.
02 Display	The display shows current cycle information and estimated time remaining, or an information code when a problem occurs.
03 Temp.	Press to change the water temperature for the selected cycle.
04 Rinse	Press to change the rinse count for the current cycle. You can set the rinse count to a max of 5, depending on the cycle.
05 Spin	Press to change the spinning speed for the current cycle. • Rinse Hold (No indicator): The final rinse cycle is suspended so that the laundry remains in the water. To unload the laundry, run a drain or spin cycle. • No Spin : The drum does not spin after the final drain cycle. • Spin Only: To run the Spin Only cycle, press Spin for 3 seconds. When the cycle time and spinning speed appear, press Spin repeatedly until a desired spinning speed is selected. Then, press Start/Pause to start the cycle. The spinning time depends on the selected cycle.
06 Dry Option	Press this button to select proper drying option.
07 Bubble Soak	Press to activate/deactivate the Bubble Soak function. This function helps remove a wide variety of stubborn stains.

WD80TA046BE_04200B-00(v1)_EN.indd 37 2020/9/3 9:44:40

Operations

08 Delay End	Delay End lets you set the end time of the current cycle. Based on your settings, the start time of the cycle will be determined by the machine's internal logic. For example, this setting is useful for programming your machine to finish a wash at the time you normally return home from work. • Press to choose a preset unit of hours.
09 Options	Press to select the options. Availability of the options depends on the cycle.
10 Start/Pause	Press to start or stop operation.
11 Power	Press to turn on/off the washing machine.

For more information on the options, see the Special features section.

*(3 sec) : Press and hold for 3 seconds.

Simple steps to start

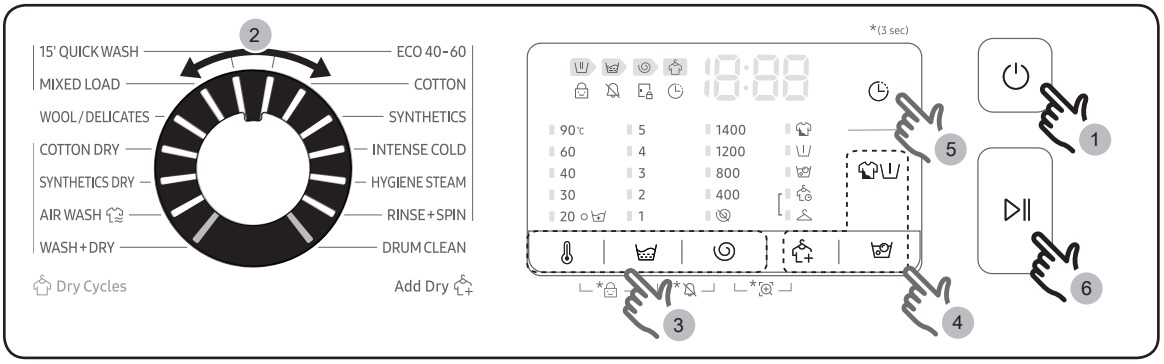

1. Press Power to turn on the washing machine.
2. Turn the Cycle Selector to select a cycle.
3. Change the cycle settings (Temp., Rinse and Spin) as necessary.
4. Press Options, Bubble Soak or Dry Option to add desired options. Available options differ depending on the selected cycle.
5. The machine provides one easy to access buttons for Delay End for your convenience. If you want to use the option, press the corresponding button.
6. Press Start/Pause.

WD80TA046BE_04200B-00(v1)_EN.indd 38 2020/9/3 9:44:41

Drying Only

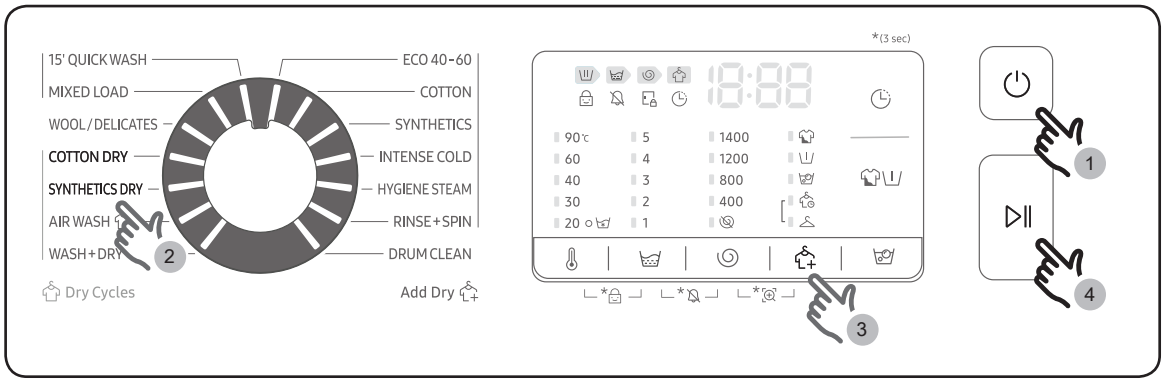

You can dry your clothes directly or dry the washed clothes according to the following procedures.

1. Press ⏻ **Power** button to turn on the washing machine.
2. Turn the Cycle Selector to select the appropriate drying cycle.
3. Press **Dry Option** button to select the appropriate drying mode.
4. Press ▷|| **Start/Pause** button to start dry.

To change the cycle during operation

1. Press **Start/Pause** to stop operation.
2. Select a different cycle.
3. Press **Start/Pause** again to start the new cycle.

WD80TA046BE_04200B-00(v1)_EN.indd 39 2020/9/3 9:44:41

Operations

Cycle overview

Standard ccycles

Cycle	Description & Max load (kg)	WD9*TA*****	WD8*TA*****	WD7*TA*****
ECO 40-60	• For cleaning normally soiled cotton items which are declared to be washable at 40 °C or 60 °C, together in the same cycle. This cycle is used to assess the compliance with the EU Ecodesign legislation. • This cycle is set as a default.	Max	Max	Max
COTTON	• For cottons, bed linens, table linens, underwear, towels, or shirts. The washing time and the rinse count are automatically adjusted according to the load. • For cleaning lightly soiled cotton items at a nominal temperature of 20 °C.	Max	Max	Max
SYNTHETICS	• For fabrics that are made of polyester(diolen, trevira), polyamide (perlon, nylon), or the like.	4.0	4.0	3.5
INTENSE COLD	• Low temperature ecobubble cycle helps reduce power consumption.	4.0	4.0	3.5
HYGIENE STEAM	• Cotton and linen fabric which have been in direct contact with the skin, such as underwear. • For optimum hygiene results select a temperature of 60 °C or above. • Steam cycles feature allergy care and bacteria elimination (sterilize).	4.0	4.0	3.5
RINSE+SPIN	• Featuring an additional rinse process after applying fabric softener to the laundry.	Max	Max	Max

WD80TA046BE_04200B-00(v1)_EN.indd 40 2020/9/3 9:44:41

Cycle	Description & Max load (kg)	WD9*TA*****	WD8*TA*****	WD7*TA*****
DRUM CLEAN	• Cleans the drum by removing dirt and bacteria from it. • Perform once every 40 washes with no detergent or bleach applied. It notifies automatically after every 40 washes. • Make sure the drum is empty. • Do not use any cleaning agents for cleaning the drum.	-	-	-
15' QUICK WASH	• For lightly soiled items in less than 2.0 kg that you want to wash quickly. • Use less than 20 g of detergent. Using more than 20 g of detergent may leave detergent residue. • For liquid detergent, use a max of 20 ml of liquid detergent.	2.0	2.0	2.0
MIXED LOAD	• For mixed load consisting of cotton and synthetic.	4.0	4.0	3.5
WOOL/ DELICATES	• Specific for machine-washable wool and delicates fabrics such as sheer fabrics, bras, lingerie (silk), and other handwash-only fabrics. • The **WOOL/DELICATES** cycle features gentle cradling and soaking to protect fibres from shrinkage/distortion. • A neutral detergent and liquid detergent is recommended.	2.0	2.0	2.0

WD80TA046BE_04200B-00(v1)_EN.indd 41 2020/9/3 9:44:41

Operations

Dry cycles

Cycle	Description & Max load (kg)	WD9*TA*****	WD8*TA*****	WD7*TA*****
COTTON DRY	• For general drying.	6.0	5.0	4.0
SYNTHETICS DRY	• A low temperature drying cycle for heat-sensitive garments.	3.0	3.0	2.5
AIR WASH	• This cycle is useful for removing bad odours.	1.0	1.0	1.0
WASH+DRY	• For cleaning normally soiled cotton items which are declared to be washable at 40 °C or 60 °C, together in the same cycle, and to dry them in such a way that it can be immediately stored in a cupboard. This cycle is used to assess the compliance with the EU Ecodesign legislation for wash and dry.	6.0	5.0	4.0

NOTE

- Loading the household washing machine or the household washer-dryer up to the capacity indicated by the manufacturer for the respective cycles will contribute to energy and water savings.
- The noise and remaining moisture content are influenced by the spinning speed: the higher the spinning speed in the spinning phase, the higher the noise and the lower the remaining moisture content.
- The most efficient cycle in terms of energy consumption are generally those that perform at lower temperatures and longer duration.

Options

Option		Description
	Intensive	• For badly soiled laundry. The operation time for each cycle is longer than normal.
	Pre Wash	• This will add a preliminary washing cycle before the main wash cycle.

WD80TA046BE_04200B-00(v1)_EN.indd 42 2020/9/3 9:44:42

Option		Description
	Bubble Soak	• Bubble Soak helps remove a variety of stubborn stains. • With Bubble Soak selected, laundry is thoroughly soaked in water bubbles for effective washing. • Bubble Soak is available with and adds up to 30 minutes to 5 cycles: Cotton, Synthetics, Hygiene Steam, Mixed Load and Wash+Dry.

Dry Option

Option		Description
	Cupboard dry	• Select to dry laundry automatically by detecting the amount and weight of the laundry. Select this to dry cotton clothing such as cotton trousers, T-shirts, and cotton underwear.
	Time Dry	• Use to dry the laundry for a specified period of time according to the material, load, and moisture.

Delay End

You can set the washing machine to finish your wash automatically at a later time, choosing a delay of between 1 to 24 hours (in 1 hour increments). The hour displayed indicates the time the wash will finish.

1. Select a cycle. Then change the cycle settings if necessary.
2. Press **Delay End** repeatedly until a desired end time is set.
3. Press **Start/Pause**.
   The corresponding indicator turns on with the clock running.
4. To cancel the **Delay End**, restart the washing machine by pressing **Power**.

Real-life case

You want to finish a two-hour cycle 3 hours later from now. For this, you add the Delay End option to the current cycle with the 3-hour setting, and press **Start/Pause** at 2:00 p.m. Then, what happens? The washing machine starts operating at 3:00 p.m., and ends at 5:00 p.m. Provided below is the time line for this example.

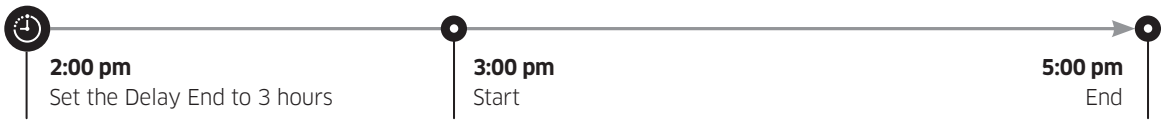

WD80TA046BE_04200B-00(v1)_EN.indd 43 2020/9/3 9:44:43

Operations

Settings

Child Lock

To prevent children or infants from accidentally starting or setting the washing machine, Child Lock locks all buttons except for the **Power** button.

- To set the Child Lock function, hold down **Temp.** and **Rinse** simultaneously for 3 seconds. To activate, press **Start/ Pause**.
- To release the Child Lock function, hold down **Temp.** and **Rinse** simultaneously for 3 seconds.

NOTE

- In the Child Lock state, you must first release the Child Lock if you want to add detergent or laundry.
- Your setting will be kept even after restarting the machine.
- You cannot open the door after a wash cycle when the Child Lock is on. Turn the function off before opening the door to take out the laundry.

Sound On/Off

You can turn on or off the sound from the washing machine. When this function is set to Off, the melody of cycle completion, and the power-off beep will not sound. However, the other sounds stay active.

- To mute the sound, hold down **Rinse** and **Spin** simultaneously for 3 seconds.
- To unmute the sound, hold down again for 3 seconds.
- Your setting will be kept even after restarting the machine.

WD80TA046BE_04200B-00(v1)_EN.indd 44 2020/9/3 9:44:43

Maintenance

Keep the washing machine clean to prevent deteriorated performance and to preserve its life cycle.

Drum clean

Perform this cycle regularly to clean the drum by removing bacteria from it. This cycle heats the water between 60 °C and 70 °C, and it also removes accumulated dirt from the rubber door gasket.

1. Press **Power** to turn on the washing machine.
2. Turn the **Cycle Selector** to select **DRUM CLEAN**.
3. Press **Start/Pause**.

NOTE

- The water temperature for **DRUM CLEAN** is set to 70 °C, which cannot be changed.
- It is recommended to run the **DRUM CLEAN** cycle once every 40 washes.
- To prevent limescale, add the proper amount of detergent according to your local water hardness or add a water softener additive together with the detergent.

DRUM CLEAN reminder

Depending on the model, the DRUM CLEAN reminder is either an icon or an LED.
For icons, the icon lights up on the control panel.
For LEDs, the LED lights up next to DRUM CLEAN, or on the option area of the control panel.

- The **DRUM CLEAN** reminder blinks on the control panel once every 40 washes. It is advisable to perform **DRUM CLEAN** regularly.
- When you first see this reminder blinking, you can ignore the reminder for 6 consecutive washes. From the 7th wash, the reminder no longer appears. However, it appears again on the second 40th wash.
- Even after the last process is terminated, the "**0**" message may remain.
- You can record the running count of the **DRUM CLEAN** cycle by pressing the **Power** button. This does not stop or turn off the machine but marks your cycle count.
- Even if "**0**" does not disappear, the machine operates normally.
- It is recommended to run the cycle regularly for hygienic purposes.

WD80TA046BE_04200B-00(v1)_EN.indd 45 2020/9/3 9:44:43

Maintenance

Smart check

To enable this function, you must first download the **Samsung Smart Washer** app at the **Play Store** or the **Apple Store**, and install it on a mobile device featuring a camera function.

The Smart Check function has been optimized for Galaxy & iPhone series (applicable models only).

1. When the washing machine detects an issue to check, an information code appears on the display. To enter Smart Check mode, press and hold **Spin** and **Dry Option** simultaneously for 3 seconds.
2. The washing machine starts the self-diagnosis procedure and displays an information code if a problem is detected.
3. Run the **Samsung Smart Washer** app on your mobile device, and tap **Smart Check**.
4. Put the mobile device close to the washing machine's display so that the smartphone camera and the washing machine face each other. Then, the information code will be recognised automatically by the app.
5. When the information code is recognised correctly, the app provides detailed information about the problem with applicable solutions.

NOTE

- The function name, Smart Check, may differ depending on the language.
- If the washing machine reflets light on the display, the app may fail to recognize the information code.
- If the app fails to recognize the Smart Check code consecutively, enter the information code manually onto the app screen.

WD80TA046BE_04200B-00(v1)_EN.indd 46 2020/9/3 9:44:44

Emergency drain

In case of a power failure, drain the water inside the drum before taking out the laundry.

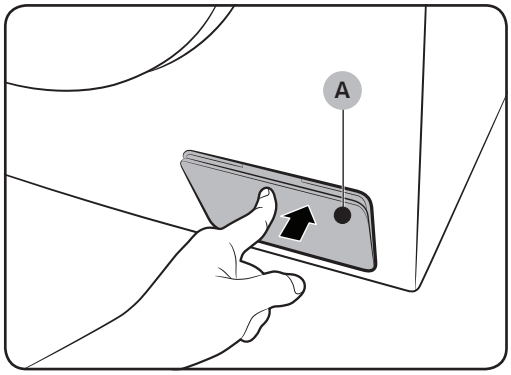

1. Power off and unplug the washing machine from the electrical outlet.
2. Gently press the top area of the **filter cover (A)** to open.

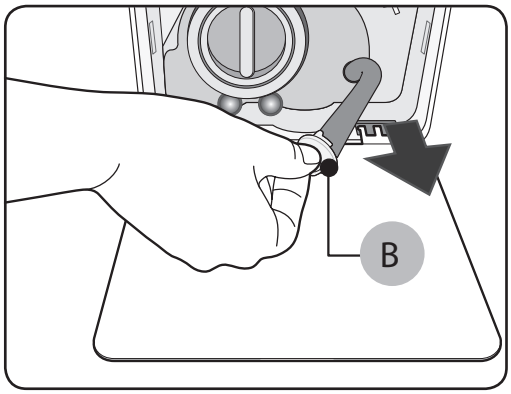

3. Put an empty, spacious container around the cover, and stretch the emergency drain tube to the container while holding the **tube cap (B)**.

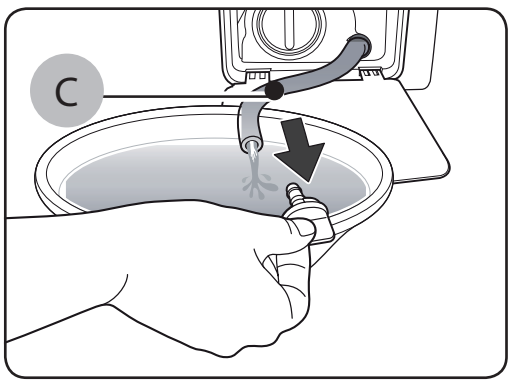

4. Open the tube cap and let water in the **Emergency drain tube (C)** flow into the container.
5. When done, close the tube cap, and reinsert the tube. Then, close the filter cover.

NOTE

Use a spacious container because the water in the drum may be more than expected.

WD80TA046BE_04200B-00(v1)_EN.indd 47 2020/9/3 9:44:44

Maintenance

Cleaning

Surface of the washing machine

Use a soft cloth with a nonabrasive household detergent. Do not spray water onto the washing machine.

Mesh filter

Clean the mesh filter of the water hose once or twice a year.

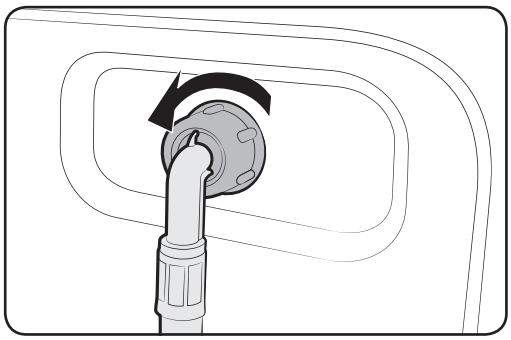

1. Turn off the washing machine, and unplug the power cord.
2. Close the water tap.
3. Loosen and disconnect the water hose from the back of the washing machine. Cover the hose with a cloth to prevent water from gushing out.

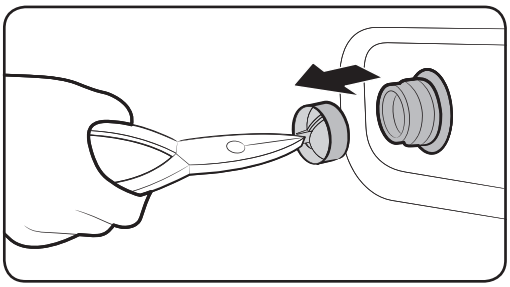

4. Use pliers to pull out the mesh filter from the inlet valve.
5. Submerge the mesh filter deeply in water so that the threaded connector is also submerged.
6. Dry the mesh filter completely in the shade.
7. Reinsert the mesh filter into the inlet valve, and reconnect the water hose to the inlet valve.
8. Open the water tap.

NOTE

If the mesh filter is clogged, an information code of "**4C**" appears on the screen.

WD80TA046BE_04200B-00(v1)_EN.indd 48 2020/9/3 9:44:44

Debris filter

Clean the debris filter bi-monthly to prevent clogging. A clogged debris filter may reduce the bubble effect.

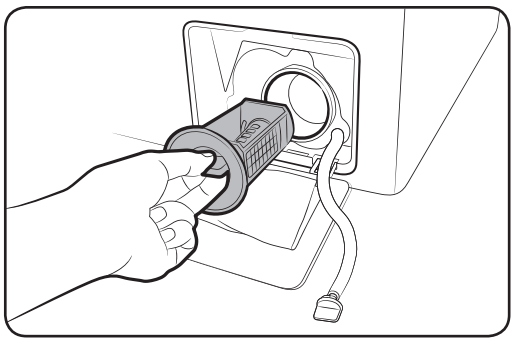

1. Turn off the washing machine, and unplug the power cord.
2. Drain the remaining water inside the drum. See the "Emergency drain" section.
3. Gently press the top area of the filter cover to open.
4. Turn the debris filter knob to the left, and drain off the remaining water.

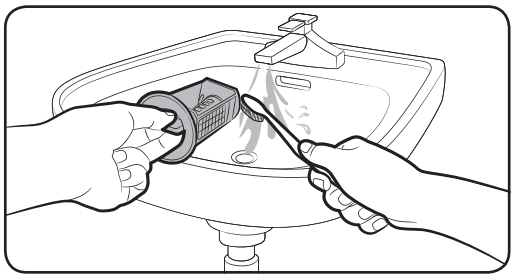

5. Clean the debris filter using soft brushes. Make sure the drain pump propeller inside the filter is unclogged.
6. Reinsert the debris filter, and turn the filter knob to the right.

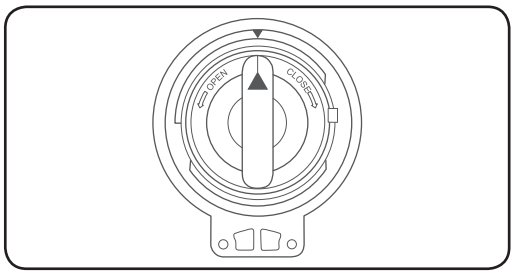

NOTE

- Some debris filters feature a safety knob that is designed to prevent accidents by children. To open the safety knob of the debris filter, push in and turn it anticlockwise. The spring mechanism of the safety knob helps open the filter.
- To close the safety knob of the debris filter, turn it clockwise. The spring makes a rattling sound, which is normal.

NOTE

If the debris filter is clogged, an information code of "5C" appears on the screen.

CAUTION

- Make sure the filter cap is closed properly after cleaning the filter. Otherwise, this may cause a leak.

WD80TA046BE_04200B-00(v1)_EN.indd 49 2020/9/3 9:44:44

Maintenance

- Make sure the filter is inserted properly after cleaning it. Otherwise, this may cause an operational failure or a leak.

Detergent Drawer

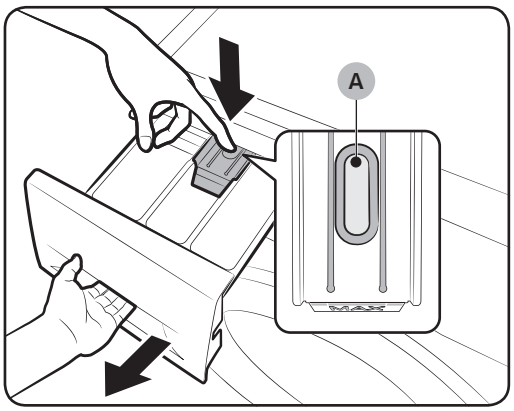

1. While holding down the **release lever (A)** on the inner of the drawer, slide open the drawer.

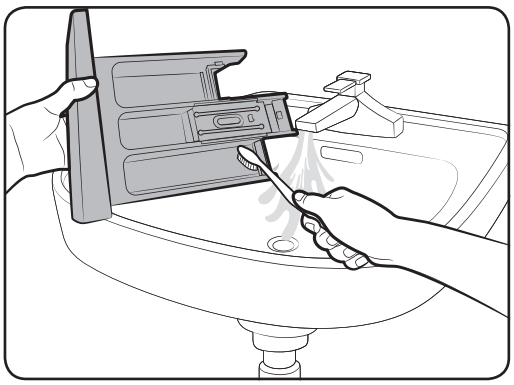

2. Clean the drawer components in flowing water using a soft brush.

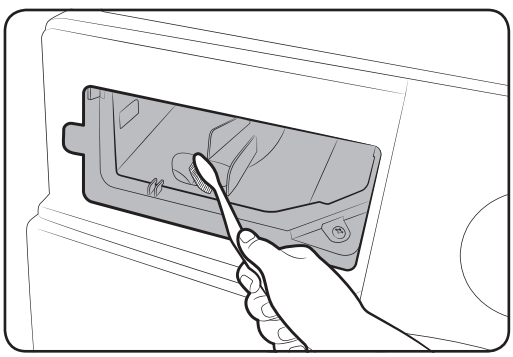

3. Clean the drawer recess using a soft brush.
4. Reinsert the **release lever** and the **liquid detergent container** to the drawer.
5. Slide the drawer inward to close it.

NOTE

To remove remaining detergent, perform the **RINSE+SPIN** cycle with the drum being empty.

WD80TA046BE_04200B-00(v1)_EN.indd 50 2020/9/3 9:44:45

Recovery from freezing

The washing machine may freeze when it drops below 0 °C.

1. Turn off the washing machine, and unplug the power cord.
2. Pour warm water over the water tap to loosen the water hose.
3. Disconnect the water hose, and soak it in warm water.
4. Pour warm water into the drum and leave it for about 10 minutes.
5. Reconnect the water hose to the water tap.

NOTE

If the washing machine still doesn't operate normally, repeat the above steps until it operates normally.

Care against an extended time of disuse

Avoid leaving the washing machine unused for an extended time.
If this is the case, drain the washing machine and unplug the power cord.

1. Turn the Cycle Selector to select a RINSE+SPIN.
2. Empty the drum, and press Start/Pause.
3. When the cycle is complete, close the water tap and disconnect the water hose.
4. Turn off the washing machine, and unplug the power cord.
5. Open the door to let air circulate through the drum.

WD80TA046BE_04200B-00(v1)_EN.indd 51 2020/9/3 9:44:45

Troubleshooting

If there is any problem, check the information message on the LED screen and follow the on-screen instructions.
If the problem persists, please contact the service center.

Checkpoints

If you encounter a problem with the washing machine, first check the table below and try the suggestions.

Problem	Action
Does not start.	• Make sure the washing machine is plugged in. • Make sure the door is properly closed. • Make sure the water taps are open. • Tap ▷‖ Start/Pause to start the washing machine. • Make sure Child Lock is not activated. • Before the washing machine starts to fill, it will make a series of clicking noises to check the door lock and will do quick drain. • Check the fuse or reset the circuit breaker. • Check if power is supplied properly. • Low voltage detected. - Check if the power cord is plugged in. • Make sure laundry is not caught in the door.
Water supply is insufficient, or no water is supplied.	• Fully open the water tap. • Make sure the door is properly closed. • Make sure the water supply hose is not frozen. • Make sure the water supply hose is not kinked or clogged. • Make sure there is sufficient water pressure. • Make sure that the cold water tap and the hot water tap are properly connected. • Clean the mesh filter as it may be clogged.
After a cycle, detergent remains in the detergent drawer.	• Make sure the washing machine is running with sufficient water pressure. • Make sure the detergent is added to the centre of the detergent drawer. • Make sure the rinse cap is inserted properly. • If using granular detergent, make sure the detergent selector is in the upper position. • Remove the rinse cap and clean the detergent drawer.

WD80TA046BE_04200B-00(v1)_EN.indd 52 2020/9/3 9:44:45

Problem	Action
Excessive vibrations or makes noise.	• Make sure the washing machine is installed on a level, solid floor that is not slippery. If the floor is not level, use the levelling feet to adjust the height of the washing machine. • Make sure the shipping bolts are removed. • Make sure the washing machine is not in contact with any other object. • Make sure the laundry load is balanced. • The motor can cause noise during normal operation. • Overalls or clothes with metallic decorations can cause noise while being washed. This is normal. • Metal objects such as coins can cause noise. After washing, remove these objects from the drum or filter case. • Redistribute the load. If only one item of clothing needs washing, such as a bathrobe or pair of jeans, the final spin result might be unsatisfactory, and a "**Ub**" check message will be shown in the display.
Does not drain and/ or spin.	• Make sure the drain hose is straightened all the way to the drain system. If you encounter a drain problem, call for service. • Make sure the debris filter is not clogged. • Close the door and press or tap **Start/Pause**. For your safety, the washing machine will not tumble or spin unless the door is closed. • Make sure the drain hose is not frozen or clogged. • Make sure the drain hose is connected to a drain system that is not clogged. • If the washing machine is not supplied with sufficient power, the washing machine temporarily will not drain or spin. As soon as the washing machine regains sufficient power, it will operate normally. • Make sure the drain hose is positioned correctly, depending on the connection type. • Clean the debris filter as it may be clogged.

WD80TA046BE_04200B-00(v1)_EN.indd 53 2020/9/3 9:44:45

Troubleshooting

Problem	Action
The door does not open.	• Press or tap **Start/Pause** to stop the washing machine. • It may take a few moments for the door lock mechanism to disengage. • The door will not open until 3 minutes after the washing machine has stopped or the power has been off. • Make sure all the water in the drum is drained. • The door may not open if water remains in the drum. Drain the drum and open the door manually. • Make sure the door lock light is off. The door lock light turns off after the washing machine has drained.
Excessive suds.	• Make sure you use the recommended types of detergent as appropriate. • Use high efficiency (HE) detergent to prevent oversudsing. • Reduce the detergent amount for soft water, small loads, or lightly soiled loads. • Non-HE detergent is not recommended.
Cannot apply additional detergent.	• Make sure the remaining amount of detergent and fabric softener is not over the limit.
Stops.	• Plug the power cord into a live electrical outlet. • Check the fuse or reset the circuit breaker. • Close the door and press or tap **Start/Pause** to start the washing machine. For your safety, the washing machine will not tumble or spin unless the door is closed. • Before the washing machine starts to fill, it will make a series of clicking noises to check the door lock and will do quick drain. • There may be a pause or soak period in the cycle. Wait briefly, and the washing machine may start. • Make sure the mesh filter of the water supply hose at the water taps is not clogged. Periodically clean the mesh filter. • If the washing machine is not supplied with sufficient power, the washing machine will temporarily not drain or spin. As soon as the washing machine regains sufficient power, it will operate normally.

WD80TA046BE_04200B-00(v1)_EN.indd 54 2020/9/3 9:44:45

Problem	Action
Fills with the wrong water temperature.	• Fully open both taps. • Make sure the temperature selection is correct. • Make sure the hoses are connected to the correct taps. Flush water lines. • Make sure the water heater is set to supply a minimum of 49 °C hot water at the tap. Also, check the water heater capacity and recovery rate. • Disconnect the hoses and clean the mesh filter. The mesh filter may be clogged. • While the washing machine fills, the water temperature may change as the automatic temperature control feature checks incoming water temperature. This is normal. • While the washing machine fills, you may notice just hot and/or just cold water going through the dispenser when cold or warm temperatures are selected. This is a normal function of the automatic temperature control feature as the washing machine determines the water temperature.
Load is wet at the end of a cycle.	• Use the High or Extra High spin speed. • Use high efficiency (HE) detergent to reduce oversudsing. • Load is too small. Small loads (one or two items) may become unbalanced and not spin completely. • Make sure the drain hose is not kinked or clogged.
Leaks water.	• Make sure the door is properly closed. • Make sure all hose connections are tight. • Make sure the end of the drain hose is correctly inserted and secured to the drain system. • Avoid overloading. • Use high efficiency (HE) detergent to prevent oversudsing. • Check the drain hose. - Make sure the end of the drain hose is not placed on the floor. - Make sure the drain hose is not clogged.
Has odours.	• Excessive suds collect in recesses and can cause foul odours. • Run cleansing cycles to sanitize periodically. • Clean the door seal (diaphragm). • Dry the washing machine interior after a cycle has finished.

WD80TA046BE_04200B-00(v1)_EN.indd 55 2020/9/3 9:44:45

Troubleshooting

Problem	Action
No bubbles are seen (Bubble models only).	• You may not be able to see bubbles if there is too much items in the drum. • Severely contaminated laundry may not generate bubbles.

If a problem persists, contact a service center.

Information codes

If the washing machine fails to operate, you may see an information code on the screen. Check the table below and try the suggestions.

Code	Action
4C	Water is not supplied. • Make sure the water taps are open. • Make sure the water hoses are not clogged. • Make sure the water taps are not frozen. • Make sure the washing machine is operating with sufficient water pressure. • Make sure that the cold water tap and the hot water tap are properly connected. • Clean the mesh filter as it may be clogged. • When the "**4C**" message appears, the machine drains water for 3 minutes. In the meantime, the power button will be disabled.
4C2	• Make sure the cold water supply hose is firmly connected to the cold water tap. If it is connected to the hot water tap, the laundry may be deformed with some cycles.
5C	Water is not draining. • Make sure the drain hose is not frozen or clogged. • Make sure the drain hose is positioned correctly, depending on the connection type. • Clean the debris filter as it may be clogged. • Make sure the drain hose is straightened all the way to the drain system. • If the information code remains, contact a customer service centre.

WD80TA046BE_04200B-00(v1)_EN.indd 56 2020/9/3 9:44:45

Code	Action
dC	Operating the washer with the door open. • Make sure the door is properly closed. • Make sure laundry is not caught in the door.
OC	Water has overflowed. • Restart after spinning. • If the information code remains on the display, contact a local Samsung service centre.
LC, LC1	Check the drain hose. • Make sure the end of the drain hose is not placed on the floor. • Make sure the drain hose is not clogged. • If the information code remains, contact a customer service centre.
3C	Check the Motor for operation. • Try restarting the cycle. • If the information code remains, contact a customer service centre.
UC	Check the pulsator motor for operation. • Check if power is supplied properly. • If the information code remains, contact a customer service centre.
	Low voltage detected. • Check if the power cord is plugged in. • If the information code remains, contact a customer service centre.
HC	High temperature heating check. • If the information code remains, contact a customer service centre.
1C	The Water Level sensor is not working properly. • Try power off and restarting the cycle. • If the information code remains, contact a customer service centre. • When the "4C" message appears, the washer do draining for 3 minutes. During this time, the Power button is inoperative.

WD80TA046BE_04200B-00(v1)_EN.indd 57 2020/9/3 9:44:45

Troubleshooting

Code	Action
AC	Check communications between main and sub PBAs. • Turn the machine off, and restart the cycle. • If the information code remains, contact a customer service centre.
FC	The drying fan motor is not working properly. • Turn the machine off, and restart the cycle. • If the information code remains, contact a local Samsung service centre.
0	The machine does not turn off automatically after the last spinning process, and the "0" message remains. • The machine operates normally without running the **DRUM CLEAN** cycle. However, it is recommended to run the cycle for hygienic purposes.

If any information code keeps appearing on the screen, contact a local Samsung service centre.

WD80TA046BE_04200B-00(v1)_EN.indd 58 2020/9/3 9:44:45

Specifications

Fabric care chart

The following symbols provide garment care directions. The care labels include four symbols in this order: washing, bleaching, drying and ironing (and dry cleaning when necessary). The use of symbols ensures consistency among garment manufacturers of domestic and imported items. Follow the care label directions to maximize garment life and reduce laundry problems.

	Resistant material		Do not iron
	Delicate fabric		Can be dry cleaned using any solvent
	Item can be washed at 95 ˚C		Dry Clean
	Item can be washed at 60 ˚C		Dry clean with perchloride, lighter fuel, pure alcohol or R113 only
	Item can be washed at 40 ˚C		Dry clean with aviation fuel, pure alcohol or R113 only
	Item can be washed at 30 ˚C		Do not dry clean
	Hand wash only		Dry flat
	Dry clean only		Can be hung to dry
	Can be bleached in cold water		Dry on clothes hanger
	Do not bleach		Tumble dry, normal heat
	Can be ironed at 200 ˚C max		Tumble dry, reduced heat
	Can be ironed at 150 ˚C max		Do not tumble dry
	Can be ironed at 100 ˚C max		

WD80TA046BE_04200B-00(v1)_EN.indd 59 2020/9/3 9:44:48

Specifications

Protecting the environment

- This appliance is manufactured from recyclable materials. If you decide to dispose of this appliance, please observe local waste disposal regulations. Cut off the power cord so that the appliance cannot be connected to a power source. Remove the door so that animals and small children cannot get trapped inside the appliance.
- Do not exceed the detergent quantities recommended in the detergent manufacturer's instructions.
- Use stain removal products and bleaches before the wash cycle only when strictly necessary.
- Save water and electricity by only washing full loads (the exact amount depends upon the program used).

Spare parts guarantee

We guarantee that the following spare parts will be available to professional repairers and end-users for a minimum period of 10 years after placing the last unit of the model on the market.

- Door, door hinges and seals, other seals, door locking assembly, and plastic peripherals such as detergent dispensers.

WD80TA046BE_04200B-00(v1)_EN.indd 60 2020/9/3 9:44:48

Specification sheet

" * " Asterisk(s) means variant model and can be varied (0-9) or (A-Z).

Model name			WD9*TA*****
Dimensions			W600 x D650 x H850 (mm)
Water pressure			50 kPa ~ 800 kPa
NET weight			68 kg
Wash and spin capacity			9.0 kg
Dry capacity			6.0 kg
Power consumption	Washing and heating	220 V	1900 W
		240 V	2300 W
	Drying	220 V	1600 W
		240 V	1900 W
Spin revolutions			1400 rpm

Type			Front loading washing machine	
Model name			WD8*TA*****	WD7*TA*****
Dimensions			W600 x D600 x H850 (mm)	W600 x D550 x H850 (mm)
Water pressure			50 kPa ~ 800 kPa	
NET weight			68 kg	63 kg
Wash and spin capacity			8.0 kg	7.0 kg
Dry capacity			5.0 kg	4.0 kg
Power consumption	Washing and heating	220 V	1900 W	
		240 V	2300 W	
	Drying	220 V	1600 W	
		240 V	1900 W	
Spin revolutions			1400 rpm	

NOTE

The design and specifications are subject to change without notice for quality improvement purposes.

WD80TA046BE_04200B-00(v1)_EN.indd 61 2020/9/3 9:44:49

Specifications

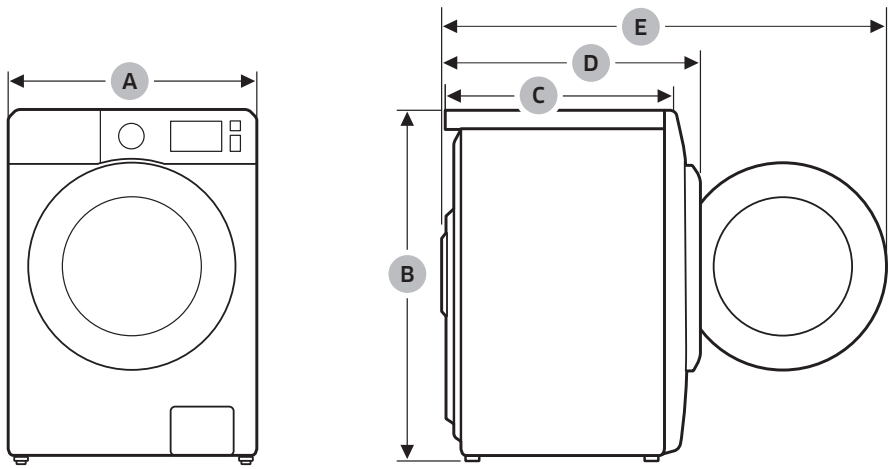

MODEL	A	B	C	D	E
WD9*TA*****	600 mm	850 mm	650 mm	713 mm	1170 mm
WD8*TA*****	600 mm	850 mm	600 mm	675 mm	1120 mm
WD7*TA*****	600 mm	850 mm	550 mm	618 mm	1070 mm

NOTE

The design and specifications are subject to change without notice for quality improvement purposes.

WD80TA046BE_04200B-00(v1)_EN.indd 62 2020/9/3 9:44:49

Sheet of household combined washer-dries

According to Regulation (EU) No. 96/60/EC

" * " Asterisk(s) means variant model and can be varied (0-9) or (A-Z).

Samsung				
Model Name		WD9*TA*****	WD8*TA*****	WD7*TA*****
Energy Efficiency Class				
A (most efficient) to G (least efficient)		B	B	B
Energy Consumption				
Washing, spinning, and drying	kWh	7.29	6.48	5.67
Washing and spinning only	kWh	1.17	1.04	0.91
Washing Performance Class				
A (most efficient) to G (least efficient)		A	A	A
Water Extraction Efficiency Class				
A (most efficient) to G (least efficient)		A	A	A
Residual moisture	%	44	44	44
Maximum Spin Speed	rpm	1400	1400	1400
Capacity				
Washing	kg	9.0	8.0	7.0
Drying	kg	6.0	5.0	4.0
Water Consumption				
Washing, spinning, and drying	ℓ	110	97	89
Washing and spinning only	ℓ	59	52	46
Program time for complete operating cycle (60 ºC cotton washing and 'dry cotton' drying for rated washing capacity)				
Washing, spinning, and drying	min	830	770	755
Washing and spinning only	min	285	285	285
Programs to which the information on the label and the Sheet relate	Wash	Cotton 60 ºC + Intensive		
	Dry	Cotton Dry		
Estimatd annual consumption for a 4-person household, always using the dries (200 cycles)				
Energy Consumption	kWh/yr	1458	1296	1134
Water Consumption	ℓ	22050	19420	17725
Estimatd annual consumption for a 4-person household, never using the drier (200 cycles)				
Energy Consumption	kWh/yr	234	208	182
Water Consumption	ℓ	11700	10400	9100

WD80TA046BE_04200B-00(v1)_EN.indd 63 2020/9/3 9:44:49

Specifications

Noise using standard 60°C cotton washing cycle and ‘ dry cotton’ drying cycle				
Washing	dB (A) re 1 pW	54	54	54
Spinning	dB (A) re 1 pW	73	73	73
Drying	dB (A) re 1 pW	59	59	59

The drying energy consumption data has been measured under the conditions specified in Standard EN50229.

WD80TA046BE_04200B-00(v1)_EN.indd 64 2020/9/3 9:44:49

Memo

WD80TA046BE_04200B-00(v1)_EN.indd 66 2020/9/3 9:44:49

WD80TA046BE_04200B-00(v1)_EN.indd 67 2020/9/3 9:44:49

SAMSUNG

QUESTIONS OR COMMENTS?

COUNTRY	CALL	OR VISIT US ONLINE AT
UK	0333 000 0333	www.samsung.com/uk/support
IRELAND (EIRE)	0818 717100	www.samsung.com/ie/support

CE

DC68-04200B-00