FUJITSU Thin Client
FUTRO S9010

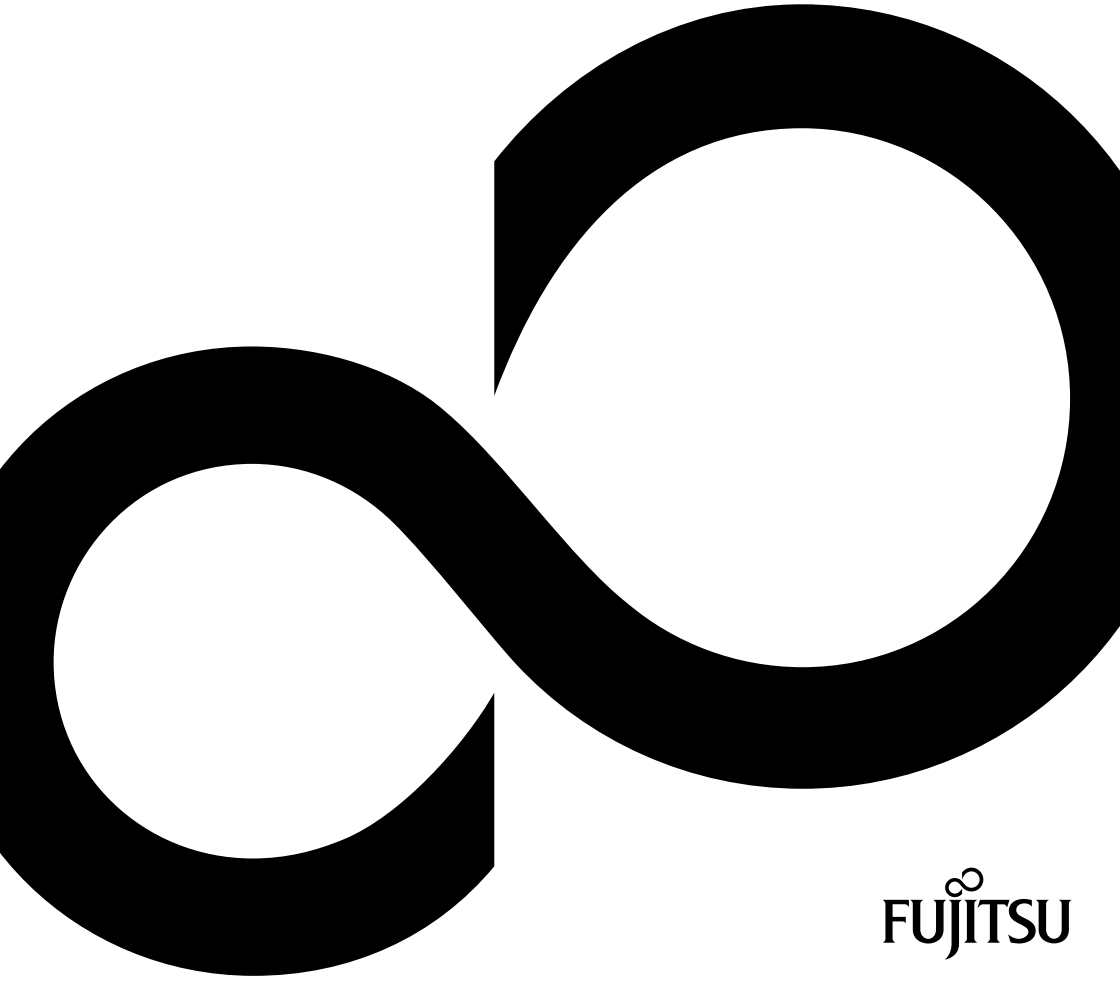

FUJITSU

Thank you for buying an innovative product from Fujitsu.

Latest information about our products, useful tips, updates etc. is available on our website: "http://www.fujitsu.com/fts/"

You can find driver updates at: "http://support.ts.fujitsu.com/download"

Should you have any technical questions, please contact:

- our Hotline/Service Desk ("http://support.ts.fujitsu.com/contact/servicedesk")
- Your sales partner
- Your sales office

We hope you enjoy using your new Fujitsu system!



Issued by / EU importer

Fujitsu Technology Solutions GmbH

Mies-van-der-Rohe-Straße 8

80807 Munich, Germany

"http://www.fujitsu.com/fts/"

Copyright

© Fujitsu Technology Solutions GmbH 2020. All rights reserved.

Publication Date

12/2020

Order No.: A26361-K1090-Z329-1-7619, edition 2

FUJITSU Thin Client
FUTRO S9010

Operating Manual

Your FUTRO...	**5**
Ports and Operating Elements	**6**
Important notes	**11**
Getting started	**14**
Operation	**23**
System expansions and repairs	**28**
Technical data	**29**
Index	**31**

Remarks

Information on the product description meets the design specifications of Fujitsu and is provided for comparison purposes. Several factors may cause the actual results to differ. Technical data is subject to change without prior notification. Fujitsu rejects any responsibility with regard to technical or editorial mistakes or omissions.

Trademarks

Fujitsu, the Fujitsu logo and FUTRO are registered trademarks of Fujitsu Limited or its subsidiaries in the USA and other countries.

Kensington and Microsaver are registered trademarks of ACCO Brands.

USB Type-C™ and USB-C™ are trademarks of the USB Implementers Forum in the USA and other countries.

Microsoft and Windows are trademarks or registered trademarks of Microsoft Corporation in the USA and/or other countries.

eLux® and Scout Enterprise Management Suite® are registered trade marks of Unicon Software Entwicklungs- und Vertriebsgesellschaft mbH in the European Union and in the USA.

All other trademarks specified here are the property of their respective owners.

Copyright

No part of this publication may be copied, reproduced or translated without the prior written consent of Fujitsu.

No part of this publication may be saved or transferred by any electronic means without the written approval of Fujitsu.

Contents

Your FUTRO... ..... **5**
Validity of the Reference Manual 5
Notational conventions 5

Ports and Operating Elements **6**
Front view 6
Rear view 7
Security functions 8
Property and data protection 8
Security Lock device 8
Securing USB covers (optional) 9
Delete data 10

Important notes **11**
Safety notes 11
Important notes for the preparation for use of your device using the Power-over-Ethernet module 12
Transporting the device 12
Cleaning the device 12
Energy saving, disposal and recycling 13

Getting started **14**
Setting up the device 14
Vertical operating position 14
Horizontal operating position 16
Connecting external devices 19
Ports on the device 19
Connecting a monitor 20
Connecting the mouse 20
Connecting the keyboard 20
Connecting external devices to the serial interface 21
Connecting external devices to the USB ports 21
Connecting microphone, headphones, line-out and line-in devices 22
Connecting the device to the network (LAN) 22
Connecting the mains adapter 22

Operation **23**
Switch the device on 23
Operating systems and management (device-dependent) 23
eLux® 23
Windows® 10 IoT Enterprise 24
Scout Enterprise Management Suite® – The management solution for Thin Clients 25
Switching off the device 26
Activating power-saving mode 26
Open BIOS Setup 26
PXE system boot 27
BIOS Update 27
Making system settings 27
Executing a system update 27

System expansions and repairs **28**

Technical data **29**
FUJITSU FUTRO S9010 thin client 29
AC adapter 30
Internal AC adapter 30

Index **31**

Your FUTRO...

... is a universal network client. The intelligent and flexible terminal is reliable and easy to maintain, it does not need a fan nor a hard disk. It therefore runs very quietly. The operating system is installed on a flash memory.

Validity of the Reference Manual

This Reference Manual is valid for the following system:

- FUJITSU FUTRO S9010 thin client

Notational conventions

	Pay particular attention to text marked with this symbol. Failure to observe these warnings could pose a risk to health, damage the device or lead to loss of data. The warranty will be invalidated if the device becomes defective through failure to observe these warnings.
	Indicates important information for the proper use of the device.
▶	Indicates an activity that must be performed
↳	Indicates a result
`This font`	indicates data entered using the keyboard in a program dialogue or at the command line, e.g. your password (**`Name123`**) or a command used to start a program (**`start.exe`**)
`This font`	indicates information that is displayed on the screen by a program, e.g.: `Installation is complete.`
This font	indicates • terms and texts used in a software interface, e.g.: Click on *Save* • names of programs or files, e.g. *Windows* or *setup.exe*.
"This font"	indicates • cross-references to another section, e.g. "Safety information" • cross-references to an external source, e.g. a web address: For more information, go to "http://www.fujitsu.com/fts" • Names of CDs, DVDs and titles or designations for other materials, e.g.: "CD/DVD Drivers & Utilities" or "Safety/Regulations" manual
Key	indicates a key on the keyboard, e.g: F10
This font	indicates terms and texts that are emphasised or highlighted, e.g.: **Do not switch off the device**

Ports and Operating Elements

This chapter presents the individual hardware components of your device. This will provide you with an overview of the ports and operating elements on the device. Please familiarise yourself with these components before you start to work with the device.

Front view

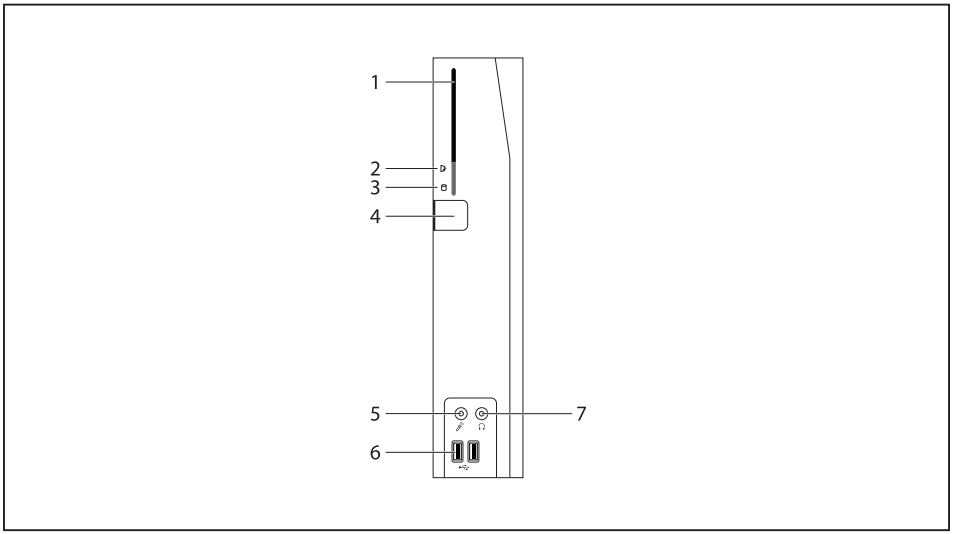

1 = SmartCard reader (optional)
2 = Indicator for SmartCard reader
3 = Flash memory or hard disk access
4 = ON/OFF switch
5 = Microphone jack
6 = USB 3.1 Gen1 ports (USB Type-A)
7 = Headphone port

Rear view

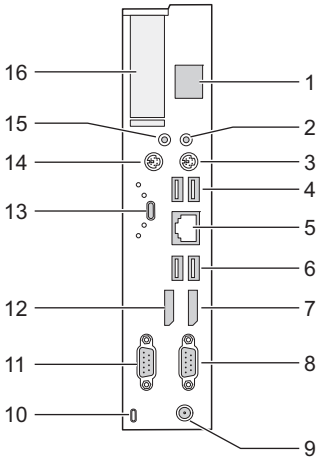

1 = Socket for Power over Ethernet module (optional)
2 = Audio output (Line Out)
3 = PS/2 keyboard port
4 = USB 2.0 ports (USB Type-A)
5 = RJ45 socket (Local Area Network)
6 = USB 2.0 ports (USB Type-A)
7 = Displayport
8 = Serial port
9 = DC input jack (DC IN)
10 = Security Lock device
11 = Serial port
12 = Displayport
13 = USB 3.1 Gen1 port (USB Type-C) with double screw security
14 = PS/2 mouse port
15 = Audio input (Line In)
16 = PCI/PCIe slot

Security functions

Property and data protection

Software functions and mechanical locking offer a broad range of functions for protecting your device and your personal data from unauthorised access. You can also combine these functions.

Security Lock device

Using the Security Lock device and the Kensington Lock cable (steel cable, accessory) you can protect your device against theft. Please consult the manual for your Security Lock.

Your device has a Security Lock device on the rear side.

If you are using the VESA sub-adapter, first connect the Kensington Lock Cable to the Security Lock device and then mount your device on the VESA sub-adapter. You can find more information in the manual for your FUJITSU FUTRO S monitor carrier.



When using the Security Lock device, opening of the casing is also prevented.

Securing USB covers (optional)

To prevent use of the USB ports, you can attach optional USB covers to the USB ports on the front and rear side of the device.

Please note that USB covers, once fitted, cannot be removed again!

Ensure that you fit the USB covers the right way round.

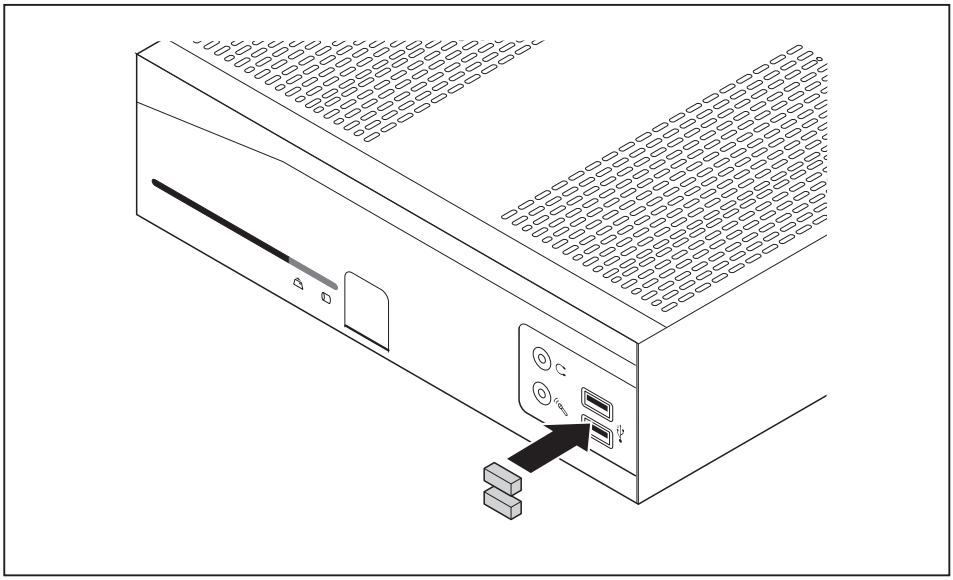

► Insert the USB covers in the USB ports on the front of the device and push the USB covers in firmly.

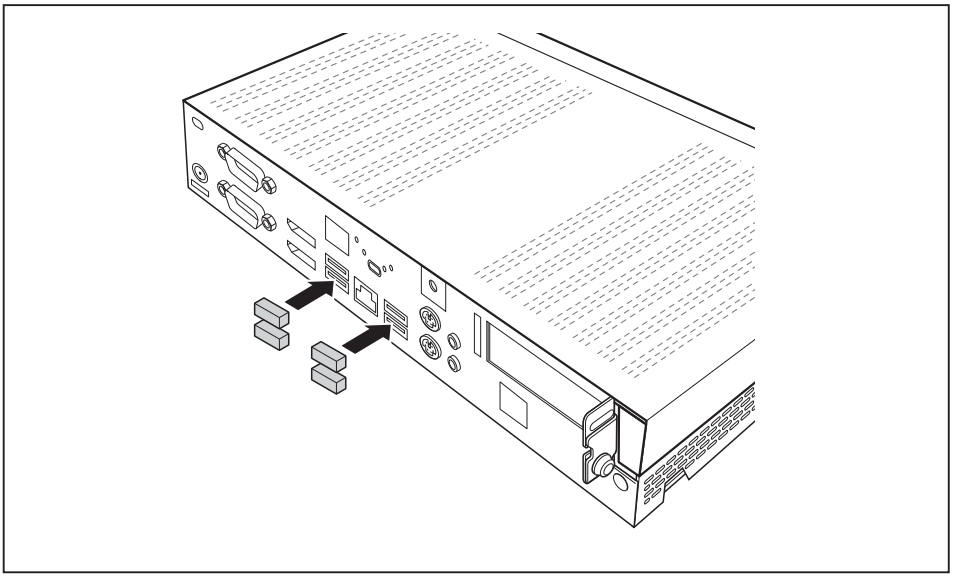

► Insert the USB covers in the USB ports on the rear side of the device and push the USB covers in firmly.

i

In the *BIOS Setup*, under *Advanced - USB Port Security*, you can also deactivate the USB ports, in order to limit the use of USB devices.

Delete data

Erase Disk function for hard disks and solid state drives

Erase Disk is a solution integrated in the firmware of FUJITSU desktops (*UEFI*: *Unified Extensible Firmware Interface*) to delete all data from a hard disk or Solid State Disc drives (SSDs).

With this function, all data from internal disks or SSDs can be irretrievably deleted before the hard disks or the whole system are disposed of. The function can also be used if hard disks are to be completely deleted, e.g. before installing a new operating system.

i

Further information on *Erase Disk* can be found on the Internet at "http://support.ts.fujitsu.com/download".

Important notes

In this chapter you will find information regarding safety which it is essential to take note of when working with your device.

Safety notes



Please follow the safety notes provided in the "Safety/Regulations" manual as well as the safety notes given below.

When installing and operating the device, please observe the notes on ambient conditions in "Technical data ", Page 29 and the instructions in "Getting started", Page 14.

The device may only be operated up to a maximum height of 3000 m (9842 ft) (for China only 2000 m (6557 ft)).

Caution, components in the system can get very hot.

The activities described in these instructions must always be performed with the greatest care.

For system expansions and repairs to the unit, refer to the manual “System Expansions and Repairs”. Some of the activities described in this manual may only be performed by authorized personnel. Improper repairs may cause danger to the user (electric shock, fire hazard) or material damage to the unit.

Operate the device only with the casing closed.



Power cable and mains adapter:

The supplied power cable conforms to the requirements of the country in which you purchased your device. Make sure that the power cable is approved for use in the country in which you intend to use it.

The mains adapter’s power cable should only be connected to a mains socket if the device is connected.

Do not use the mains adapter for other devices.

Use only the mains adapter which is intended for use with the device, see chapter "Technical data ", Page 29.

Make sure that the rated current of the mains adapter is not higher than that of the power system to which you connect the mains adapter.

ON/OFF switches do not disconnect the device from the mains voltage. To completely disconnect the mains voltage, remove the power plug from the power socket.

Important notes for the preparation for use of your device using the Power-over-Ethernet module

With the help of the Power-over-Ethernet module you can operate the device via the LAN without an additional power supply. For this, you need to have an appropriate network infrastructure.

To operate the device using the Power-over-Ethernet module, end-span or midspan devices as defined in IEEE 802.3at and shielded CAT-5 network cables or higher-quality cables with a larger cross-section (AWG23 or smaller) and a maximum length of 75 m are required. End-span devices will only be supported in connection with a hardware classification.

When operating the device using the Power-over-Ethernet module, due to the limited power output, not all hardware expansion levels are possible. For this reason, the use of USB port type C (S26361-F3465-E9) or of PCI-Express expansion cards is prohibited. If you have any questions, please contact our support or sales outlet.

Depending on the system utilisation, occupancy of external interfaces (excluding the keyboard, screen, microphone and headset) may cause overloading of the Power-over-Ethernet module. In case of overheating or overload, the system can be shut down automatically to prevent damage to the device or the network. In the event of switching off, the assignment of the external interfaces must be checked or reduced.

If the system does not receive the required power according to standard 802.3 at (25.5 W), the system stops in the post with an error message. In this case, check your midspan or end-span device.

Transporting the device



Transport all parts separately in their original packaging or in a packaging which protects them from knocks and jolts, to the new site.

Do not unpack them until all transportation manoeuvres are completed.

If the device is brought from a cold environment into the room where it will be used, condensation may occur. Before operating the device, wait until it is absolutely dry and has reached approximately the same temperature as the installation site.

Cleaning the device



Turn off all power and equipment switches and disconnect the power plug from the mains outlet.

Do not clean any interior parts yourself, leave this job to a service technician.

Do not use any cleaning agents that contain abrasives or may corrode plastic (alcohol, thinner or acetone).

Never clean the device with water! Water entering into the device could present a serious risk to users (e.g. electric shock).

Ensure that no liquid enters the system.

The surface can be cleaned with a dry cloth. If particularly dirty, use a cloth that has been moistened in mild domestic detergent and then carefully wrung out.

Use disinfectant wipes to clean the keyboard and the mouse.

Energy saving, disposal and recycling

You can find information on these subjects in chapter "Activating power-saving mode", Page 26, on the Recovery DVD or on our website ("http://www.fujitsu.com/fts/about/fts/environment-care/").

The following sections apply to the FUJITSU Thin Client FUTRO only:

Information about the "Eco-design directive": Regulation 1275/2008, based on the EU Eco-design Directive (2009/125/EU), defines requirements for the power consumption of electrical and electronic domestic and office devices in stand-by and off mode.

In general, all FUTRO thin client products have been developed for energy-efficient operation and low stand-by losses. Customer-specific requirements and requirements of the operating system, which are a priority for optimal operation, can contradict the requirements of the above-mentioned regulation.

For administrative purposes, such as remote maintenance of systems, the "Wake-on-LAN" (WoL) function is indispensable for our customers and is therefore a default setting. When the WoL function is active, the maximum permissible power draw can be exceeded slightly in OFF mode. By deactivating the WoL function, it is possible to comply with the legal requirements. Please see chapter "Activating power-saving mode", Page 26 for the procedure.

The energy saving mode (ACPI S4 Save-to-disk), which is familiar from many current mobile and desktop systems, is not available in the embedded operating systems for technical reasons. Therefore, it is not possible to switch devices with this operating system automatically into Off mode.

The operating system of a thin client is stored on a flash memory with optimised size and is provided with write protection after configuration has been completed by the customer. This prevents data security from being put at risk through frequent writing to a flash memory, such as when updating the *swapfiles* in the operating system or through other applications. Every flash memory permits only a limited number of write cycles. Both the activated write protection and the available limited flash memory capacity rule out the possibility of activating energy saving mode (ACPI S4).

Getting started



Please observe the safety information in the "Important notes", Page 11 chapter.

Setting up the device



In order to ensure that the casing is sufficiently ventilated and to prevent overheating, the device must only be operated with the base foot attached.

If the device is to be built-in, adequate ventilation must be assured.



Fit the base feet for horizontal or vertical operation (see "Vertical operating position", Page 14 and "Horizontal operating position", Page 16).

Vertical operating position



If you wish to operate the device in the vertical operating position, use the two feet supplied for vertical operation.

Only mount the feet on the device side shown in the diagrams.

If connecting many cables to the device, ensure that the device is in a stable position, in order to prevent it from toppling over.

Proceed as follows to prepare the device for the vertical operating position:

- ► Disconnect the cables if required.
- ► Lay the device on its top (narrow side) as shown, on a stable, flat and clean surface.

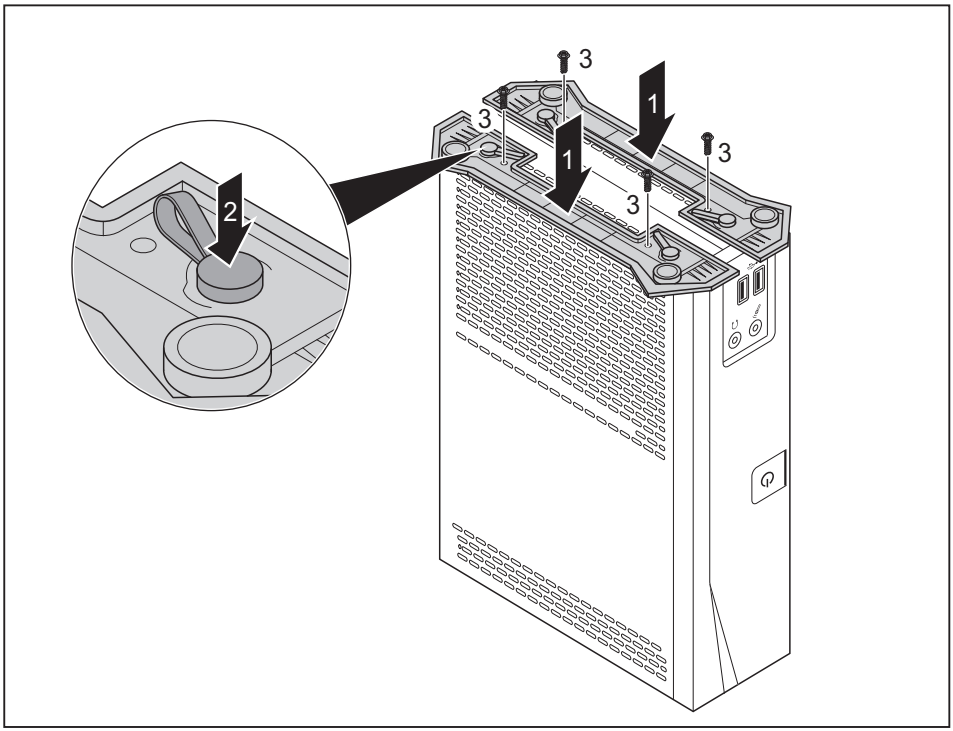

► Place the feet on the casing (1). In doing so, make sure that the 4 clips (2) on the feet are aligned above the corresponding holes in the casing.

► To secure the feet, press the clips in the direction of the arrow (2) until they are felt to engage in the holes.

i

To protect your device against unauthorised removal of the feet, the feet can also be secured with two screws each, of type M2.5x5 mm. These are not included in the delivery scope.

► Secure the feet with the screws (3).

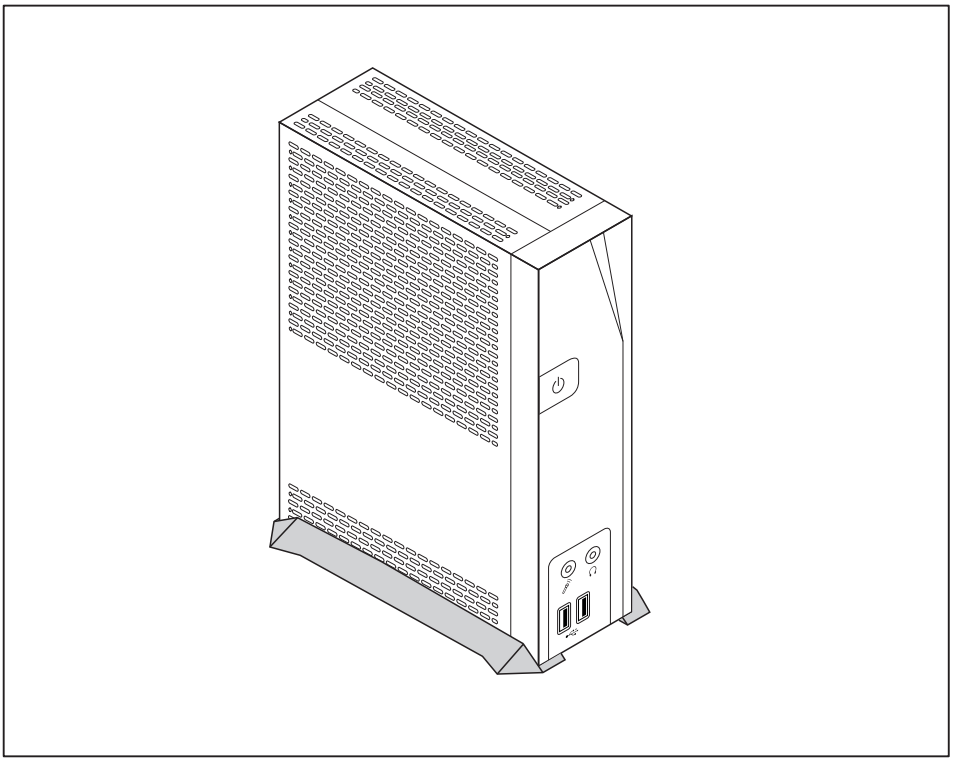

► Stand the device on the feet.
► If necessary, reconnect any cables that were previously disconnected.

Horizontal operating position

If you wish to operate the device in the horizontal operating position, use the two feet supplied for horizontal operation.

Only mount the feet on the device side shown in the diagrams.

Proceed as follows to prepare the device for the horizontal operating position:

► Disconnect the cables if required.
► Lay the device on its right side as shown, on a stable, flat and clean surface.

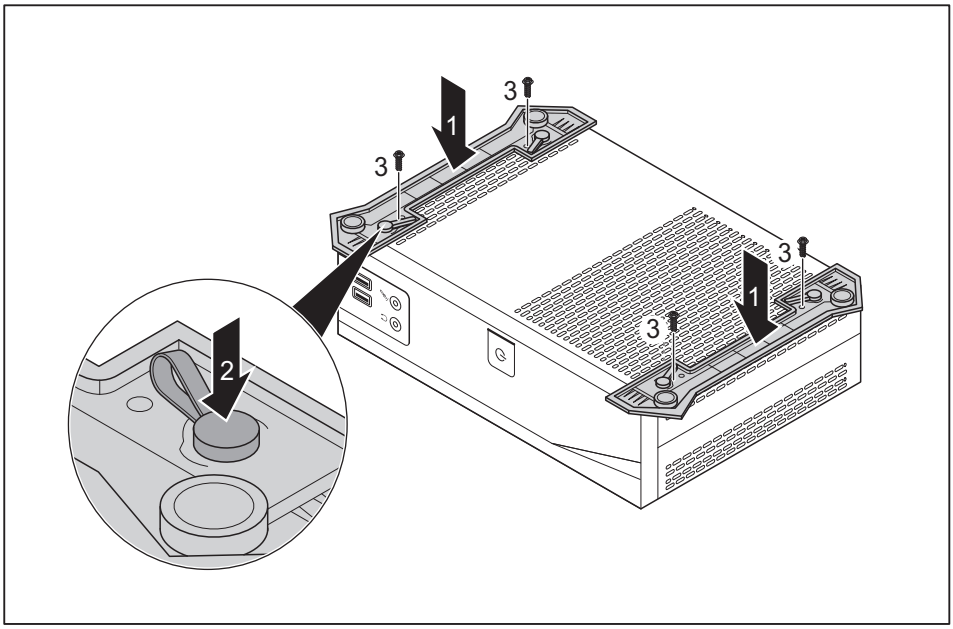

► Place the feet on the casing (1). In doing so, make sure that the 4 clips (2) on the feet are aligned above the corresponding holes in the casing.

► To secure the feet, press the clips in the direction of the arrow (2) until they are felt to engage in the holes.

i

To protect your device against unauthorised removal of the feet, the feet can also be secured with two screws each, of type M2.5x5 mm. These are not included in the delivery scope.

► Secure the feet with the screws (3).

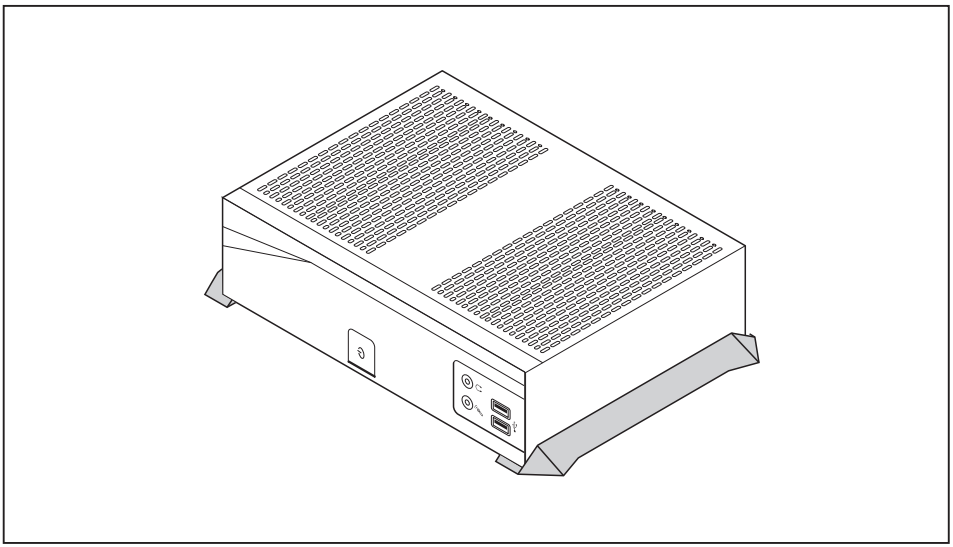

► Stand the device on the feet.
► If necessary, reconnect any cables that were previously disconnected.

Connecting external devices



Read the documentation on the external device before connecting it.

With the exception of USB devices, always remove all power plugs before connecting external devices!

Do not connect or disconnect cables during a thunderstorm.

Always hold the plug of a cable when removing it. Never unplug a cable by pulling the cable itself.

To ensure that your device works properly, use only the connection cable supplied or use a high-quality connection cable.

Ports on the device

The ports are located on the front and rear side of the device. The ports available on your device depend on the configuration level you have selected. The standard ports are marked with the symbols shown below (or similar). Detailed information on the location of the ports is provided in the manual for the mainboard.



Headphone port, black (front of device)



Microphone port, black (front of device)



Audio output (Line Out), light green



Audio input (Line In), light blue



Serial port, turquoise



RJ45-LAN port



USB 2.0 - Universal Serial Bus, type-A, black



USB 3.1 Gen1 - Universal Serial Bus, type-A: blue, type-C: black

DP Displayport



PS/2 mouse port, green



PS/2 keyboard port, purple



Some of the connected devices require special software (e.g. drivers) (refer to the documentation for the connected device and operating system).

Connecting a monitor



Only attach the screen to your device when it is switched off.

- ► Follow the instructions contained in the monitor manual to prepare the monitor for operation (e.g. connecting cables).
- ► Connect the data cable to the required monitor port on your device.
- ► Plug the monitor power cable into the grounded mains outlet.

Connecting the mouse

You can connect a USB mouse or a PS/2 mouse to your device.

Connecting a USB mouse

- ► Connect the USB mouse to one of the USB ports on the device.

Connecting a PS/2 mouse



The PS/2 mouse is only detected by the device if you connect the mouse when the device is switched off and then switch the device on again.

- ► Connect the PS/2 mouse to the PS/2 mouse port of the device.
- ► Switch your device on again.

Connecting the keyboard

You can connect a USB keyboard or a PS/2 keyboard to your device.

Connecting a USB keyboard

Use the supplied keyboard cable only.

- ► Plug the flat rectangular USB connector of the keyboard cable into a USB port of the device.

Connecting a PS/2 keyboard

Use the supplied keyboard cable only.



The PS/2 keyboard is only detected by the device if you connect the keyboard when the device is switched off and then switch the device on again.

- ► Switch your device off.
- ► Plug the round plug of the keyboard cable into a keyboard port of the device.
- ► Switch your device on again.

Connecting external devices to the serial interface

For an exact description of how to connect external devices to the corresponding port, please see the external device documentation.

External devices can be connected to the serial port.

- ► Connect the data cable to the external device.
- ► Connect the data cable to the corresponding serial interface.

Port settings

You can change the settings of the port in the *BIOS Setup*.

Device drivers

The devices connected to the serial interface require drivers. Your operating system already includes many drivers. If the required drive is missing, install it. The latest drivers are usually available on the Internet or will be supplied on a data carrier.

Connecting external devices to the USB ports

You can connect a wide range of external devices to the USB ports (e.g. printer, scanner, mouse or keyboard).

USB devices are hot-pluggable. This means you can connect and disconnect USB cables while your device is switched on.

Additional information can be found in the documentation for the USB devices.

- ► Connect the data cable to the external device.
- ► Connect the data cable to one of the USB ports on your device.

Device drivers

External USB devices which you connect to one of the USB ports don't usually need their own drivers because the software required is already included in the operating system. If the device requires separate software, please follow the instructions in the manufacturer's documentation.

Connecting microphone, headphones, line-out and line-in devices

- ► Connect the microphone to the microphone port.
- ► Connect the headphones to the headphones port.
- ► Connect line-out devices to the audio output.
- ► Connect the external line-in devices to the audio input.

Connecting the device to the network (LAN)

- ► Connect the 10/100/1000 Base T network cable to the RJ45 LAN port.

Connecting the mains adapter

Observe the safety notes in the enclosed "Safety/Regulations" manual.

The supplied power cable conforms to the requirements of the country in which you purchased your device. Make sure that the power cable is approved for use in the country in which you intend to use it.

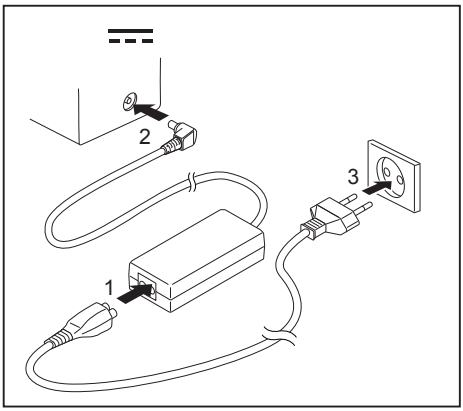

- ► Connect the mains cable (1) to the mains adapter.
- ► Connect the mains adapter cable (2) to the DC jack (DC IN) of the device.
- ► Plug the mains cable (3) into a mains socket.

Operation

Switch the device on

► If necessary, switch the monitor on (see the operating manual for the monitor).
► Press the ON/OFF switch on the front of the device.
↳ The power indicator lights up and the device starts.

Operating systems and management (device-dependent)

Depending on the configuration level, your device is fitted with one of the following operating systems:

- eLux®
- Windows® 10 IoT Enterprise LTSB

Regardless of the operating system, your device can be managed with the *Scout Enterprise* management solution.

eLux®

The eLux Thin Client operating system is based on Linux and is protected against viruses and malware by the write-protected file system.

It has a lean and modular structure, and thus has low demands on the hardware. It enables access to the server via the integrated Citrix and Microsoft clients as well as the optional VMware client. It has a user-friendly licence model, with the possibility of transferring licences to new devices.



Updates for eLux® can be found on the Fujitsu support pages or on the Internet at "www.myelux.com".

For more information on eLux, go to "http://www.unicon-software.com/produkte/elux/".

Windows® 10 IoT Enterprise

The Windows® versions approved by Fujitsu are optimally designed for thin client applications due to the pre-installed write filter and client software. In addition they offer an optimum integration into Scout Enterprise or SCCM.



The write protect filter is not enabled in the delivery state, to make it easier to adapt the thin client to your requirements. Fujitsu strongly advises that the write protect filter should be enabled during normal operation, because only then is the typical thin client high security of the device guaranteed. In addition, the enabled write filter has a positive effect on the durability of the flash memory.

You can find updates for Windows® operating systems on the Internet at "http://support.ts.fujitsu.com".

Please note the licensing restrictions when running a Windows® version for thin clients, such as for example:

- No desktop functions may be run on the local system.
- Files that are the result of the use of desktop functions are not allowed to be permanently saved on the local system.

Additional information

This Product is licensed under the AVC, the VC-1 and the MPEG-4 Part 2 Visual patent portfolio licenses for the personal and non-commercial use of a consumer to (i) encode video in compliance with the above standards (“Video Standards”) and/or (ii) decode AVC, VC-1 and MPEG-4 Part 2 Visual that was encoded by a consumer engaged in personal and non-commercial activity or was obtained from a video provider licensed to provide such video. None of the licenses extend to any other product regardless of whether such product is included with this product in a single article. No license is granted or will be implied for any other use. Additional information may be obtained from MPEG LA, LLC. See "www.mpegla.com".

To the extent that non-Product software includes AV Technologies licensed by MPEG LA, LLC under a product category, such license agreement will determine any royalties due for AV Technologies included in non-Product software.

This Product includes audio encoding and decoding technology from Dolby Laboratories. Microsoft has licensed Dolby’s two-channel decoder for use in this Product. Company is not licensed for Dolby Digital Plus decoder for decoding more than two channels and the Dolby Digital consumer encoder, and Company must separately license such technologies from Dolby. Company agrees to obtain the license(s) and to pay applicable royalties and other fees. Dolby considers failure to obtain such licenses to be infringement of Dolby Laboratories intellectual property rights. Company may apply for a license from Dolby Laboratories using the following URL: "http://www.dolby.com/professional/technology/licensing/getting-licensed.html".

If you have questions for Dolby Laboratories, Company may contact Dolby Laboratories at the following email address: "licensinginquiries@dolby.com".

Dolby, Dolby Digital Plus, Dolby Digital Stereo Creator and the double-D symbol are registered trademarks of Dolby Laboratories. Any use of those marks requires a separate license from Dolby.

Graphics processor supports DirectX 9. Some games and programs may require DirectX 10 or higher for superior performance and graphics. Check "www.windows.com/Windows10specs" for details.

Some Windows® 10 IoT Enterprise features - such as Windows Hello, support for 5-point touch, USB peripheral support - may require advanced hardware. Check "ts.fujitsu.com/futro" for details.

Scout Enterprise Management Suite® – The management solution for Thin Clients

Basic functionalities

- Multi-administrator policy
- Simple scalability and high availability
- Optimal support of complex organisations

Asset management functions

- Display of serial number and connected monitors
- Illustration of update history
- Flexible licence management
- Display of device, hardware and network information
- Display of installed or connected components, such as mainboard, memory, display adapters, monitors and USB devices

User-friendliness and handling

- Simple and intuitive operation
- Automatic updates of eLux packages
- Complete audit reporting

Help Desk support

- Support of Wake-On-LAN and Remote Power On/Off
- Mirroring of desktops, encrypted and audit-proof
- Extensive diagnostic information



For more information on Scout Enterprise, go to "http://www.unicon-software.com/produkte/scout-enterprise/".

More information and manuals are available on the Internet at "http://www.unicon-software.com/udocs".

Switching off the device

► Shut down the operating system in the proper way. In Windows: from the *Start* menu select the *Shut Down* option.

► If the operating system does not automatically switch the device into energy-saving mode or switch it off, press the ON/OFF switch. Warning, this could lead to a loss of data!

↳ If the device is switched off, it consumes a minimum of energy.



The ON/OFF switch does not disconnect the device from the mains voltage. To completely disconnect the mains voltage, remove the power plug from the power socket.

► If necessary, switch the monitor off (see the operating manual for the monitor).

Activating power-saving mode

Due to customer requirements and requirements of the operating system, the "Wake-on-LAN" (WoL) function is switched on by default. With the WoL function, the power draw in OFF mode increases slightly.

To meet the requirements of EC regulation 1275/2008 regarding the implementation of the Ecodesign directive (2009/125/EC), the default WoL setting must be changed as follows:

► To start the *BIOS Setup utility* after the system start, press the ON/OFF switch for two to three seconds.

or

► Press the F2 function key or the Del key.

► In the *Power* sub-menu, change the *External Power Button Control*, *LAN* and *Keyboard* settings to *disabled*.

► To save the setting and exit the *BIOS Setup Utility*, press function key F4.

↳ After making this change, the system will achieve the lowest energy saving mode during shut-down.

In this status, the “Wake-on-LAN” function can no longer be used.

Open BIOS Setup

► When the system starts, press the ON/OFF switch for two to three seconds.

or

► Press (possibly several times) the F2 key.

↳ *BIOS Setup* will be started. Select one of the tabs to access other setting options in *BIOS Setup*.

PXE system boot

► Switch the device on with the ON/OFF switch.
► When starting the system, press the F12 key several times.
↳ The boot menu is displayed.
► Select the desired boot option.

BIOS Update

When should a BIOS update be performed?

Fujitsu Technology Solutions makes new BIOS versions available to ensure compatibility with new operating systems, new software or new hardware. In addition, new BIOS functions can be integrated.

A BIOS update should also always be performed if there is a problem that cannot be solved using new drivers or new software.

Where can I obtain BIOS updates?

You can find the BIOS updates on the Internet at "http://support.ts.fujitsu.com/".

Making system settings

Make the system settings as described in the documentation for your operating system.

Executing a system update

There are two ways of updating your system software:

- via the Unicon Product Scout Enterprise
- via an external USB data carrier

For information on the system update, see the documentation on your operating system.

System expansions and repairs



Information on system expansions and repairs can be found on the Internet in the "System Expansions and Repairs" manual at "http://www.fujitsu.com/fts/support".

Operations that are distinguished in the manual as Only For Service, such as repairs to the device, may only however be performed by authorised service technicians. Incorrect repairs may greatly endanger the user (electric shock, fire risk) and will invalidate your warranty.

Technical data

FUJITSU FUTRO S9010 thin client

Electrical data	
Processor:	Intel Pentium J5040, Gemini Lake Refresh Quad Core 2.0 GHz (max. 3.2 GHz Single Core Burst Freq.) with integrated Intel UHD Graphics 605
Rated voltage:	With AC adapter: 19 – 20 V With internal PSU: 100 – 240 V
Max. rated current:	With AC adapter: 2,0 A or 3,25 A With internal PSU: 1,0 A
Dimensions (vertical operating position)	
Width x Depth x Height (with foot):	90 mm x 193 mm x 261 mm / 3,54 inches x 7,60 inches x 10,28 inches
Width x Depth x Height (without foot):	52 mm x 193 mm x 250 mm / 2,05 inches x 7,60 inches x 9,84 inches
Dimensions (horizontal operating position, without WLAN)	
Width x Depth x Height (with foot):	289 mm x 193 mm x 63 mm / 11,38 inches x 7,60 inches x 2,48 inches
Width x Depth x Height (without foot):	250 mm x 193 mm x 52 mm / 9,84 inches x 7,60 inches x 2,05 inches
Weight	
in basic configuration:	approx. 1.3 kg / 2.87 lbs

Environmental conditions	
Temperature: • Operation • Transportation	 15 °C .... 35 °C / 59 °F ... 95 °F –25 °C .... 60 °C / –13 °F ... 140 °F
Clearance required to ensure adequate ventilation:	Minimum of 200 mm / 7.87 inches on all sides
Maximum permissible operating height	3000 m (9842 ft), for China only 2000 m (6557 ft)



Condensation must be avoided during operation.

AC adapter

Electrical data	
Rated voltage:	100 – 240 V
Max. rated current:	1.2 A (40 W) or 1.5 A (65 W)
Rated frequency:	50 – 60 Hz

Only the following adapters with Limited Power Source may be used:

- 40W: S26113-E622-V55 Model: ADP-40HH A
- 65W: S26113-E623-V55 Model: ADP-65JH AB

Internal AC adapter

Electrical data	
Rated voltage:	100 - 240 V
Max. rated current:	1,0 A
Rated frequency:	50 – 60 Hz

Only the following internal adapter may be used: S26113-E598-V50 Model: DPS-65AB-2A

Index

A
Audio input 19
line in 7
Audio output 19
line out 6
Line Out 7

B
Base feet 14, 16
BIOS-Setup
opening 26

C
Components
installing/removing 28
Connecting a PS/2 keyboard 20
Connecting,
keyboard 20
mouse 20
PS/2 keyboard 20
PS/2 mouse 20
USB keyboard 20

D
data
delete 10
Data protection 8
DC input connector
DC IN 7
Device
Ports 19
Device drivers,
serial interface 21
Device,
switching off 26
switching on 23
transporting 12
upgrades 28
Devices,
connecting 21
Displayport 19
Disposal 13

E
Energy saving 13
Erase Disk 10
External devices
Ports 19
External devices,
connecting 21

F
Flash memory access 6

G
Getting started 14

H
Headphone port 6
Headphones 19
connecting 22
Horizontal operating position 16

I
Important notes 11
Installation opening
for modules 7

K
Keyboard port 19
Keyboard,
connecting 20
port 20

L
LAN 22
LAN port 19
LAN socket 7
Line in 19
Line out 19
Line-out devices
connecting 22

M
Microphone
connecting 22
Microphone port 6, 19
Monitor port 7
Monitor,
Connecting 20
switching off 26
switching on 23
Mouse port 19
Mouse,
connecting 20

N
Note
safety 11
Notes
important 11

O
Off switch 6
On switch 6
Operating position, horizontal 16
Operating position, vertical 14

P
PCI slot 7
PCIe slot 7
Ports 6, 19
Power cable
connection 22
Power-on indicator 6
Preparing for operation 22
Property protection 8
Protection, property and data 8
PS/2 keyboard port 7
PS/2 mouse port 7, 19
PS/2 mouse,
connecting 20
port 20
PXE system boot 27

R
Recycling 13
Retransportation 12

S
Safety notes 11
Security Lock
Security Lock device 7
Serial interface 21
Serial interface,
connecting devices 21
settings 21
Serial port 7, 19
Servicing 28
Side cover 14
SmartCard reader
indicator 6
System expansion 28
System unit, see Device 12

T
Technical data 29
Transportation 12

U
Universal Serial Bus 19
Upgrades,
device 28
USB
ports 6
USB devices,
connecting 21
USB port 20
USB port,
connecting devices 21
connecting keyboard 20
connecting the mouse 20
USB ports 7

V
Vertical operating position 14