W9 OM2 4S1 P

12NC: 859991551940

GTIN (EAN) code: 8003437835025

SENSING THE DIFFERENCE



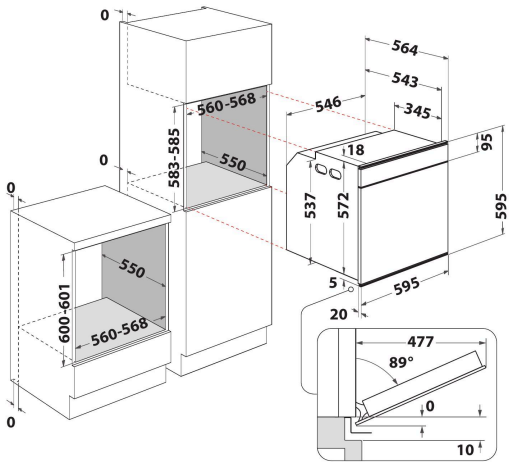

- 6TH Sense technology
- 6thSense Live
- Up to 60 6th SENSE Cooking Combinations
- Pyrolytic cleaning system
- Energy class A+
- Cavity 73 L
- Cook4
- Ready2Cook
- Defrost function
- Forced Air Fan Cooking
- Grill
- Easy Clean Enamel Interior
- Turbo grill function
- Maxi cooking
- Pastry function
- Pizza/Bread function
- Eco Forced Air

Whirlpool built in electric oven: inox color, self cleaning - W9 OM2 4S1 P

This Whirlpool built in Oven features: self cleaning technology, that uses a high-temperature cycle to burn food residues into ashes, which can then be easily wiped away with a sponge. Advanced electric technology allowing you to cook dishes saving energy. Halogen lamp allowing a more energy-efficient performance. Exclusive 6th SENSE technology, that allows you to pick among a variety of pre-programmed recipes, and your oven will automatically adjust cooking, temperature and time settings, to ensure perfect results. Ready2Cook function, that uses a powerful convection system to quickly reach the right temperature, and completely eliminate pre-heating need.

Multifunction 8
Multiple cooking methods. The Multifunction 8 feature offers flexible cooking options, to ensure perfect results, whatever the recipe.

6th Sense W9
No more guesswork. Simply pick your recipes, and let 6th SENSE cook them to perfection, every time. Up to 60 cooking combinations organized to fit your lifestyle and diet, for a full assisted cooking experience.

Ready2cook
No pre-heating required. The Ready2Cook function uses a powerful convection system to quickly reach the right temperature, and completely eliminate the need for pre-heating.

6th Sense Live App
6TH SENSE technology automatically adjusts time, temperature, and humidity settings to ensure perfect results time after time. With the 6TH SENSE sensors and an exciting choice of exclusive options, consumers can whip up the perfect meal while enjoying an unparalleled intuitive experience.

Easy to clean
Easy to clean. To clean your oven, simply use warm water and a soft cloth, no need to use harsh chemicals or cleaners.

Ixelium
Long lasting beauty. The revolutionary iXelium nanotechnology treatment protects your oven from scratches and ensures a perfect shine, always. And it's easy to clean: all you need is water and a soft cloth.

W9 OM2 4S1 P

12NC: 859991551940

GTIN (EAN) code: 8003437835025

Whirlpool
SENSING THE DIFFERENCE

MAIN FEATURES

Product group	Oven
Commercial code	W9 OM2 4S1 P
Main colour of product	Inox
Construction type	Built-in
Type of control	Electronic
Type of control settings	-
Are any hobs controls integrated?	No
Which kind of hobs can be controlled?	-
Automatic programmes	Yes
Current (A)	16
Voltage (V)	220-240
Frequency (Hz)	50/60
Length of Electrical Supply Cord (cm)	90
Plug type	No
Depth with open door 90 degree (mm)	-
Height of the product	595
Width of the product	595
Depth of the product	564
Minimum niche height	0
Minimum niche width	0
Niche depth	0
Net weight (kg)	40.5
Usable volume (of cavity)	73
Integrated Cleaning system	Pyrolytic
Grids of the cavity	2
Trays	2

TECHNICAL FEATURES

Timer	Yes
Time control	Electronic
Time-setting options	Start and Stop
Safety device	-
Interior light	Yes
Number of interior lights of the cavity	1
Position of interior lights of the cavity	Rear
Oven guides of the cavity	Telescopic
Probe of the cavity	No

PERFORMANCES

Energy input	Electric
Type of energy of the cavity	Electricity
Energy efficiency class - NEW (2010/30/EU)	A+
Energy consumption per cycle conventional - NEW (2010/30/EU)	0.91
Energy consumption per cycle forced air convection - NEW (2010/30/EU)	0.7

