
x2

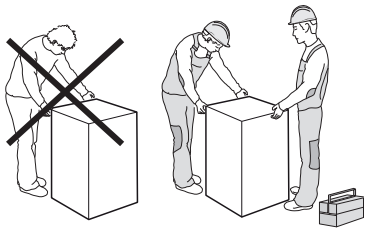

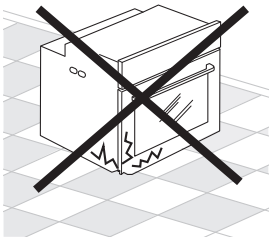

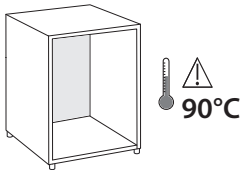
90°C

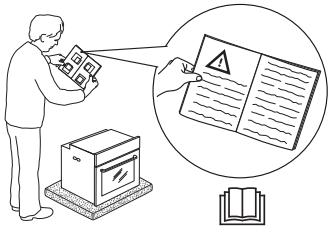

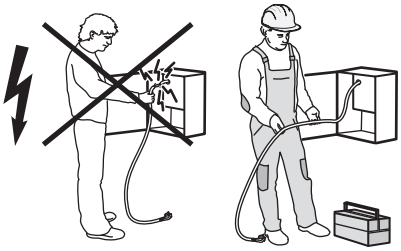

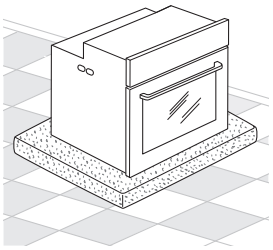

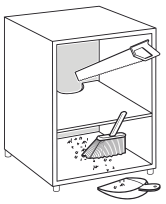

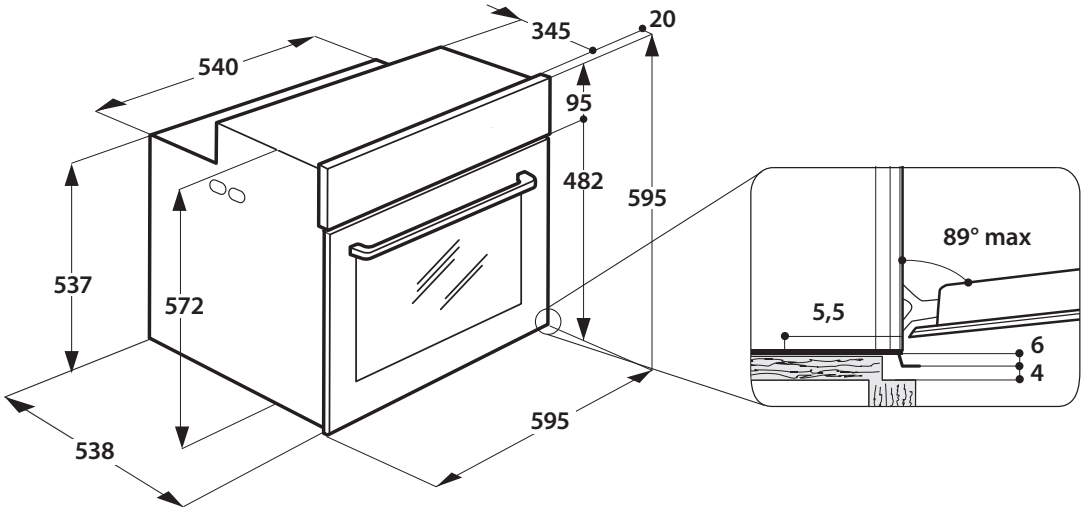
345
20
540
95
482
595
537
572
89° max
5,5
6
4
595
538

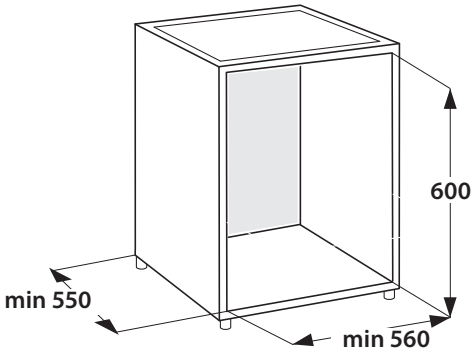
600
min 550
min 560

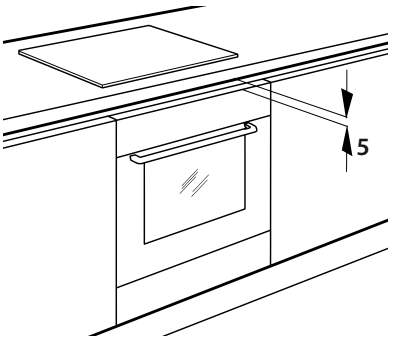
5

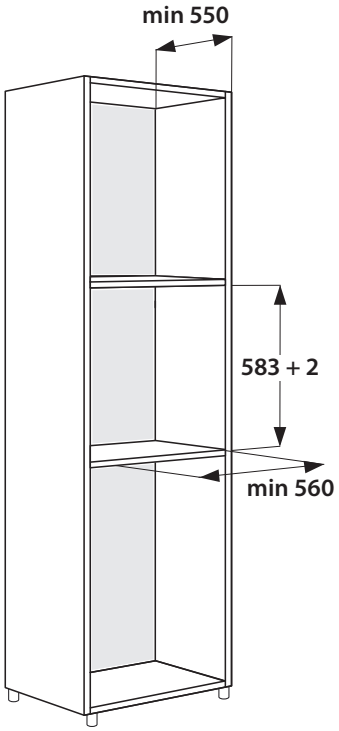
min 550
583 + 2
min 560

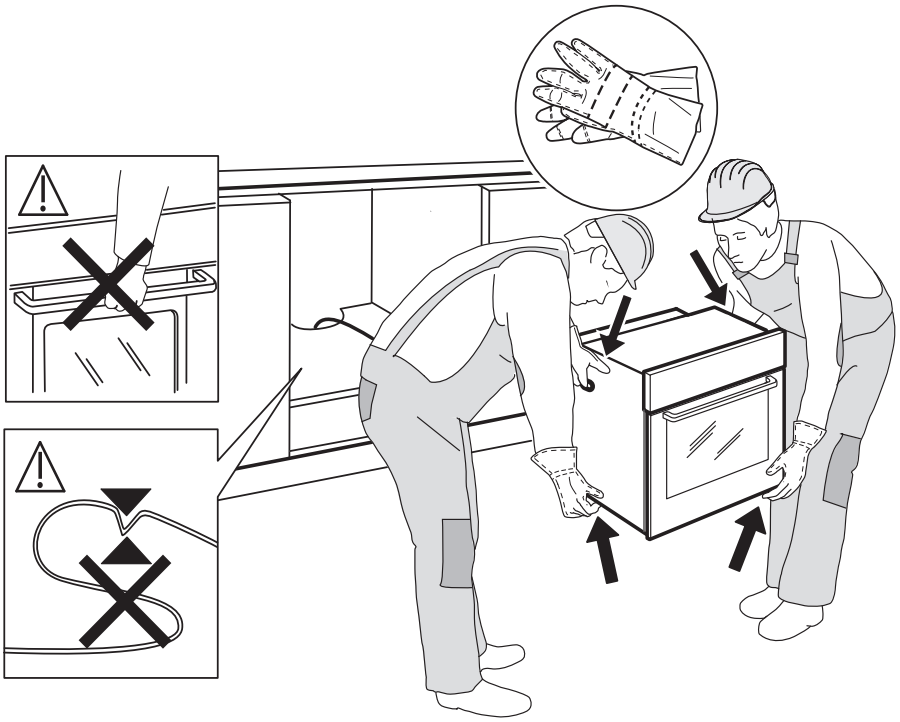

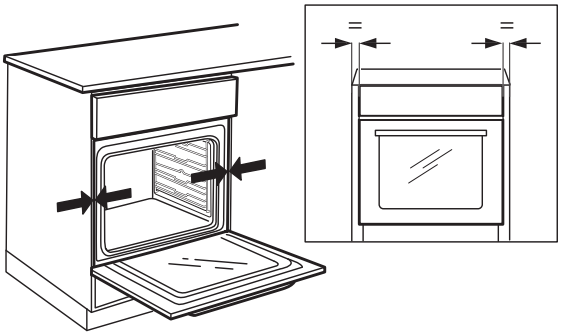

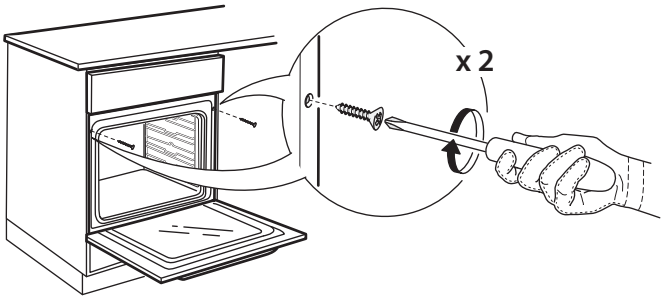
x 2

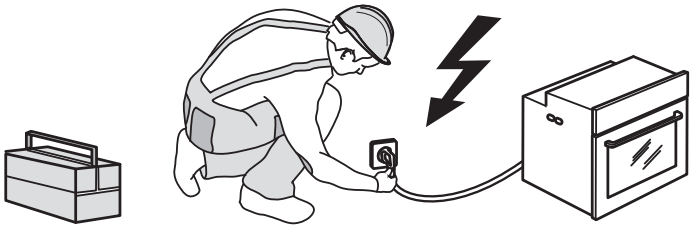

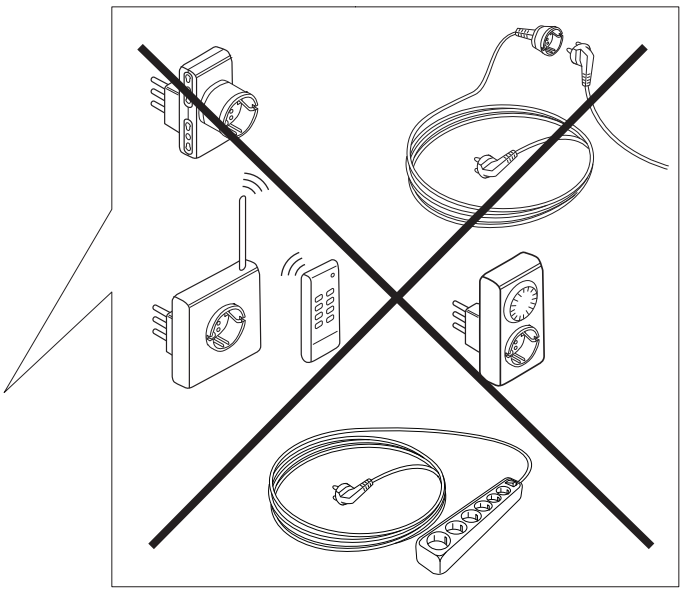

EN
SAFETY INSTRUCTIONS

IMPORTANT TO BE READ AND OBSERVED

Before using the appliance, read these safety instructions. Keep them nearby for future reference.

These instructions and the appliance itself provide important safety warnings, to be observed at all times. The manufacturer declines any liability for failure to observe these safety instructions, for inappropriate use of the appliance or incorrect setting of controls.

⚠ Very young children (0-3 years) should be kept away from the appliance. Young children (3-8 years) should be kept away from the appliance unless continuously supervised. Children from 8 years old and above and persons with reduced physical, sensory or mental capabilities or lack of experience and knowledge can use this appliance only if they are supervised or have been given instructions on safe use and understand the hazards involved. Children must not play with the appliance. Cleaning and user maintenance must not be carried out by children without supervision.

⚠ WARNING: The appliance and its accessible parts become hot during use. Care should be taken to avoid touching heating elements. Children less than 8 years of age must be kept away unless continuously supervised.

⚠ Do not touch the oven during pyrolytic cycle (self cleaning) - risk of burns. Keep children and animals away during and after the pyrolytic cycle (until the room has been fully ventilated). Excess spillage, especially fats and oils, must be removed from the oven cavity before initiating the pyrolytic cycle. Do not leave any accessory or material within the oven cavity during the pyrolytic cycle.

⚠ If the oven is installed below a hob, make sure that all burners or electric hotplates are switched off during the pyrolytic cycle - risk of burns.

⚠ Never leave the appliance unattended during food drying. If the appliance is suitable for probe usage, only use a temperature probe recommended for this oven - risk of fire.

⚠ Keep clothes or other flammable materials away from the appliance, until all the components have cooled down completely - risk of fire. Always be vigilant when cooking foods rich in fat, oil or when adding alcoholic beverages - risk of fire. Use oven gloves to remove pans and accessories. At the end of cooking, open the door with caution, allowing hot air or steam to escape gradually before accessing the cavity - risk of burns. Do not obstruct hot air vents at the front of the oven - risk of fire.

⚠ Exercise caution when the oven door is in the open or down position, to avoid hitting the door.

PERMITTED USE

⚠ CAUTION: The appliance is not intended to be operated by means of an external switching device, such as a timer, or separate remote controlled system.

⚠ This appliance is intended to be used in household and similar applications such as: staff kitchen areas in shops, offices and other working environments; farm houses; by clients in hotels, motels, bed & breakfast and other residential environments.

⚠ No other use is permitted (e.g. heating rooms).

⚠ This appliance is not for professional use. Do not use the appliance outdoors.

⚠ Do not store explosive or flammable substances (e.g. gasoline or aerosol cans) inside or near the appliance - risk of fire.

INSTALLATION

⚠ The appliance must be handled and installed by two or more persons - risk of injury. Use protective gloves to unpack and install - risk of cuts.

⚠ Installation, including water supply (if any), electrical connections and repairs must be carried out by a qualified technician. Do not repair or replace any part of the appliance unless specifically stated in the user manual. Keep children away from the installation site. After unpacking the appliance, make sure that it has not been damaged during transport. In the event of problems, contact the dealer or your nearest Aftersales Service. Once installed, packaging waste (plastic, styrofoam parts etc.) must be stored out of reach of children - risk of suffocation. The appliance must be disconnected from the power supply before any installation operation - risk of electric shock. During installation, make sure the appliance does not damage the power cable - risk of fire or electric shock. Only activate the appliance when the installation has been completed.

⚠ Carry out all cabinet cutting operations before fitting the appliance and remove all wood chips and sawdust. Do not obstruct the minimum gap between the worktop and the upper edge of the oven - risk of burns.

Do not remove the oven from its polystyrene foam base until the time of installation.

⚠ After installation, the bottom of the appliance must no longer be accessible - risk of burns.

⚠ Do not install the appliance behind a decorative door - risk of fire.

ELECTRICAL WARNINGS

⚠ The rating plate is on the front edge of the oven (visible when the door is open).

⚠ It must be possible to disconnect the appliance from the power supply by unplugging it if plug is accessible, or by a multi-pole switch installed upstream of the socket in accordance with the wiring rules and the appliance must

be earthed in conformity with national electrical safety standards.

⚠ Do not use extension leads, multiple sockets or adapters. The electrical components must not be accessible to the user after installation. Do not use the appliance when you are wet or barefoot. Do not operate this appliance if it has a damaged power cable or plug, if it is not working properly, or if it has been damaged or dropped.

⚠ If the supply cord is damaged, it must be replaced with an identical one by the manufacturer, its service agent or similarly qualified persons in order to avoid a hazard - risk of electric shock.

⚠ In case of replacement of power cable, contact an authorised service centre.

CLEANING AND MAINTENANCE

⚠ WARNING: Ensure that the appliance is switched off and disconnected from the power supply before performing any maintenance operation; never use steam cleaning equipment - risk of electric shock.

⚠ Do not use harsh abrasive cleaners or metal scrapers to clean the door glass since they can scratch the surface, which may result in shattering of the glass.

⚠ Ensure the appliance is cooled down before any cleaning or maintenance - risk of burns.

⚠ WARNING: Switch off the appliance before replacing the lamp - risk of electric shock.

DISPOSAL OF PACKAGING MATERIALS

The packaging material is 100% recyclable and is marked with the recycle symbol . The various parts of the packaging must therefore be disposed of responsibly and in full compliance with local authority regulations governing waste disposal.

DISPOSAL OF HOUSEHOLD APPLIANCES

This appliance is manufactured with recyclable or reusable materials. Dispose of it in accordance with local waste disposal regulations. For further information on the treatment, recovery and recycling of household electrical appliances, contact your local authority, the collection service for household waste or the store where you purchased the appliance. This appliance is marked in compliance with European Directive 2012/19/EU, Waste Electrical and Electronic Equipment (WEEE). By ensuring this product is disposed of correctly, you will help prevent negative consequences for the environment and human health. The symbol on the product or on the accompanying documentation indicates that it should not be treated as domestic waste but must be taken to an appropriate collection centre for the recycling of electrical and electronic equipment.

ENERGY SAVING TIPS

Only preheat the oven if specified in the cooking table or your recipe. Use dark lacquered or enamelled baking trays as they absorb heat better. Food requiring prolonged cooking will continue to cook even once the oven is switched off.

Standard cycle (PYRO): is suitable for cleaning a very dirty oven. Energy-saving cycle (PYRO EXPRESS/ECO) - only in some models -: consumes approximately 25% less energy than the standard cycle. Select it at regular intervals (after cooking meat on 2 or 3 consecutive occasions).

ECO DESIGN DECLARATION

This appliance meets the Eco Design requirements of European Regulations n. 65/2014 and 66/2014 in conformity with the European standard EN 60350-1.

The Manufacturer, Whirlpool EMEA S.p.A., declares that this W9 OS2 4S1 P, W9 OM2 4MS2 P, W9 OM2 4MS1 P, W9 OM2 4MS P, W9 OM2 4S1 P, W9 OM2 4MS2 H model of household appliance with radio equipment Tourmaline WiFi Module is compliant with directive 2014/53/UE.

The complete text of the declaration of conformity is present at the following website: docs.whirlpool.eu

The radio equipment operates in the 2.4 GHz ISM frequency band, the maximum radio-frequency power transmitted does not exceed 20 dBm (e.i.r.p.).

This product includes certain open source software developed by third parties. The open source license usage statement is available at the following website: docs.whirlpool.eu

400011219196