DIC 3B+16 A S

12NC: F158666

GTIN (EAN) code: 8050147586662



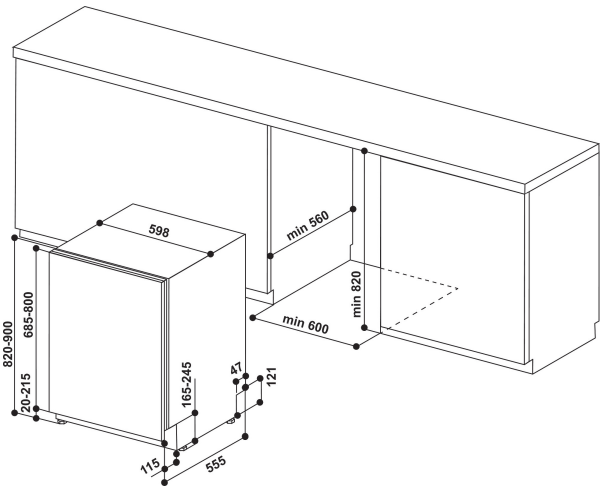

MAIN FEATURES

Construction type	Built-in
Installation type	Full-integrated
Type of control	Electronic
Type of control settings	Digit
Removable work top	No
Door decor panel	N/A
Main colour of product	White
Electrical connection rating (W)	1900
Current (A)	10
Voltage (V)	220-240
Frequency (Hz)	50
Length of Electrical Supply Cord (cm)	130
Plug type	Schuko
Length inlet hose (cm)	155
Length outlet hose (cm)	150
Adjustable plinth	No
Height of removable worktop (mm)	0
Adjustable feet	Yes - all from front
Height of the product	820
Width of the product	598
Depth of the product	555
Depth with open door 90 degree (mm)	-
Minimum niche height	0
Maximum niche height	0
Minimum niche width	0
Maximum niche width	0
Niche depth	560
Net weight (kg)	35.5
Gross weight (kg)	37.5

TECHNICAL FEATURES

Automatic programmes	Yes
Maximum temperature for water intake (°C)	0
Start delay options	Continuous
Start delay time max. (h)	12
Progress indicator	-
Digital countdown indicator	Yes
Salt light indicator	Yes
Rinse aid light indicator	Yes
Safety device	Yes
Adjustable upper basket	Yes
Largest loadable dish upper basket (cm)	0
Largest loadable dish lower basket (cm)	0
Number of place settings	13

PERFORMANCES

Energy efficiency class - NEW (2010/30/EU)	A+
Energy consumption annual (kWh/annum) - NEW (2010/30/EU)	296
Duration of the left-on mode - NEW (2010/30/EU)	12
Power consumption in left-on mode - NEW (2010/30/EU)	6
Power consumption in off-mode - NEW (2010/30/EU)	0.5
Water consumption annual (l/annum) - NEW (2010/30/EU)	3360
Noise level (dB(A) re 1 pW)	46