MWI 120 SX

12NC: F159140

GTIN (EAN) code: 8050147591406



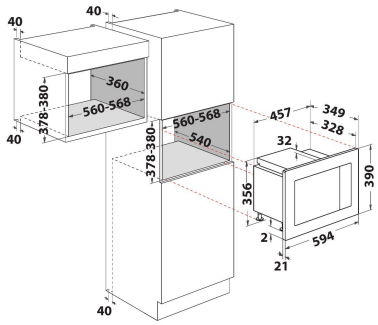

MAIN FEATURES

Product group	Microwave
Commercial code	MWI 120 SX
Main colour of product	Stainless steel
Type of micro-wave oven	MW only
Construction type	Built-in
Type of control	Electronic
Type of control settings	Digit
Additional cooking method Grill	No
Crisp	No
Steam	No
Additional cooking method Fan cooking	No
Clock	Yes
Automatic programmes	Yes
Height of the product	390
Width of the product	594
Depth of the product	349
Minimum niche height	378
Minimum niche width	560
Niche depth	360
Net weight (kg)	13.85
Cavity capacity (l)	20
Turntable	Yes
Turntable diameter (mm)	245
Integrated Cleaning system	No

TECHNICAL FEATURES

Current (A)	12
Voltage (V)	230-240
Frequency (Hz)	50
Length of Electrical Supply Cord (cm)	135
Plug type	Schuko
Timer	Yes
Grill power (W)	0
Type of grill	N/A
Cavity material	Stainless steel
Interior light	Yes
Additional cooking method Grill	No
Position of interior lights of the cavity	Ceiling

PERFORMANCES

6th Sense / Dynamic Intelligence	No
Number of power levels	6
Maximum micro-wave power (W)	800
Bread defrost	No
Jet defrost	Yes
Jet start	Yes