A

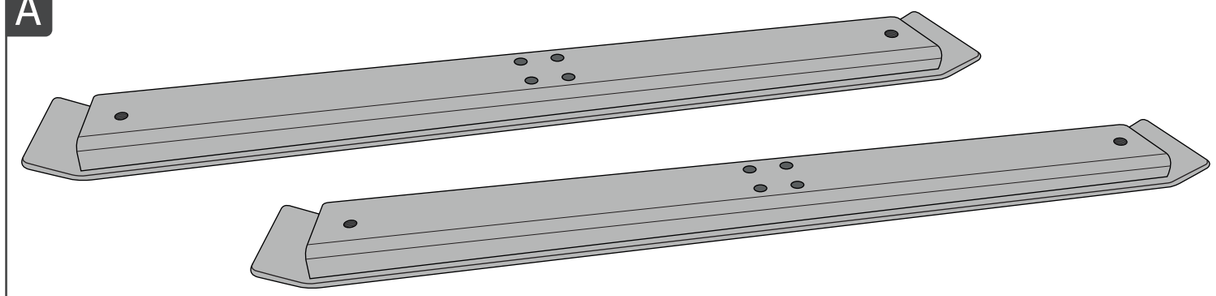

B

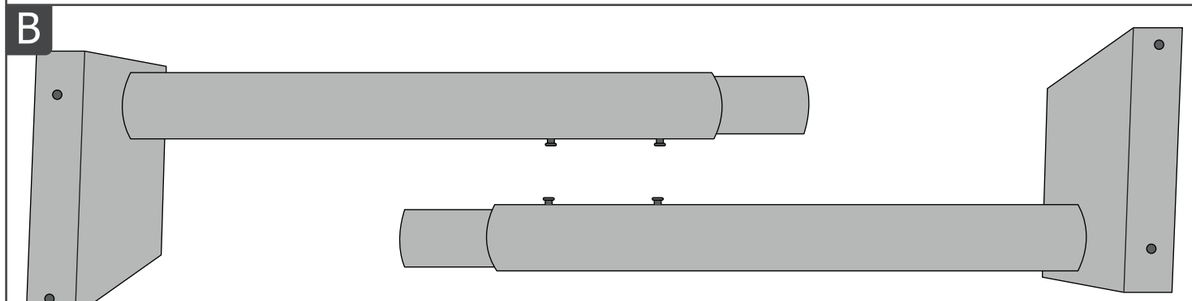

C

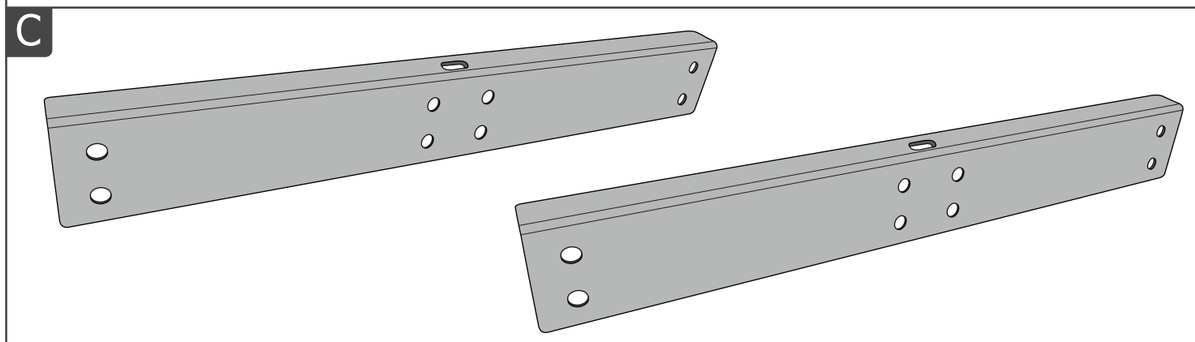

D

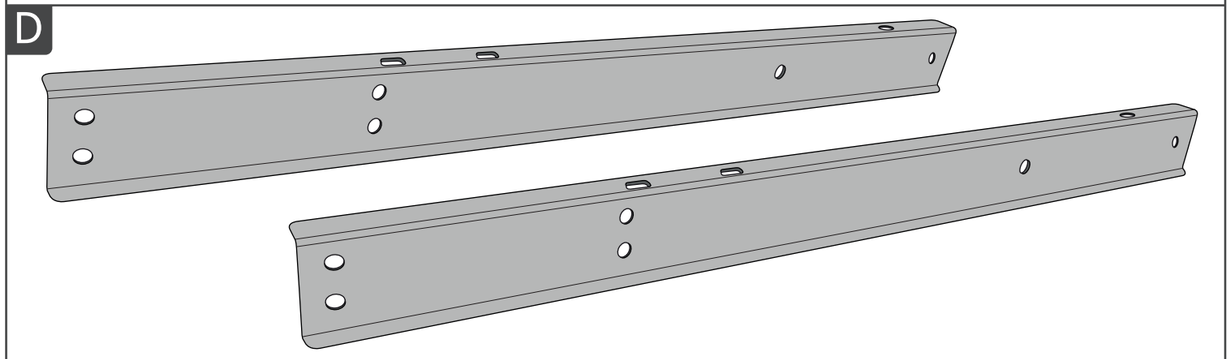

E

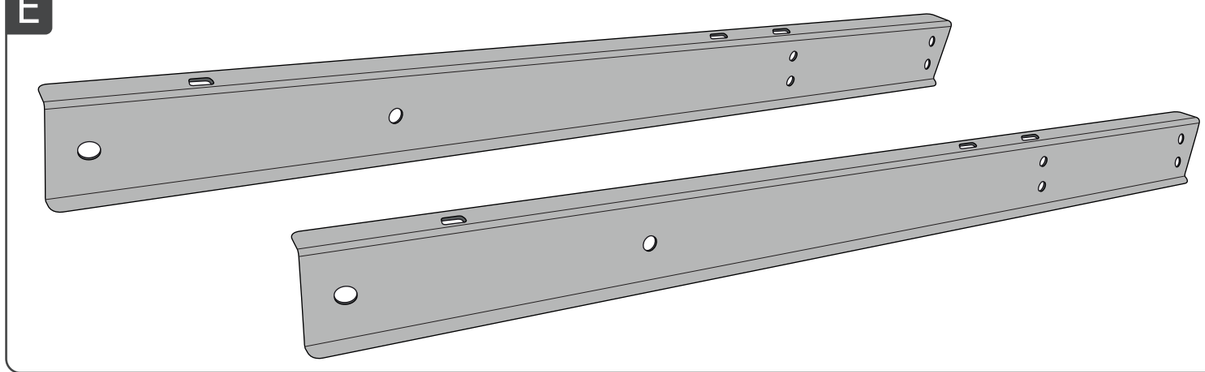

7

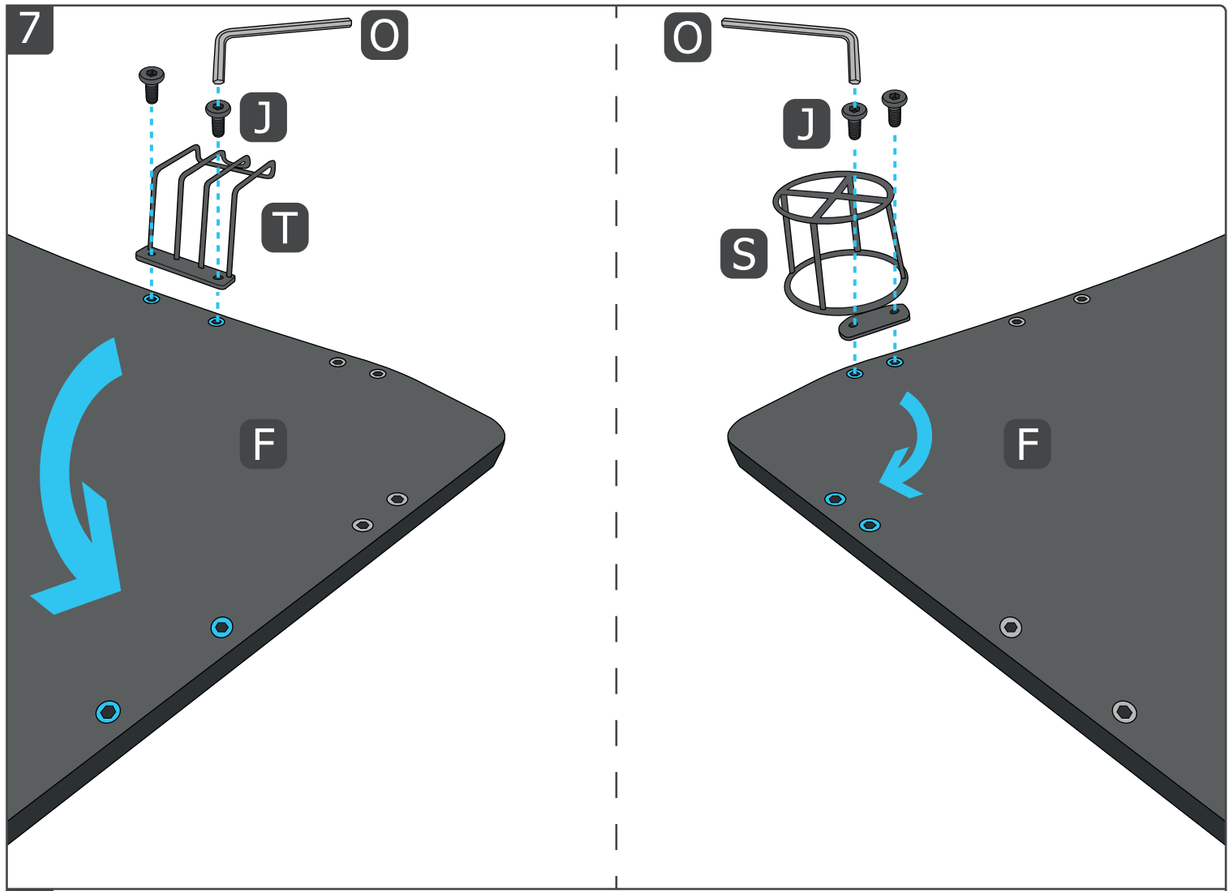

8

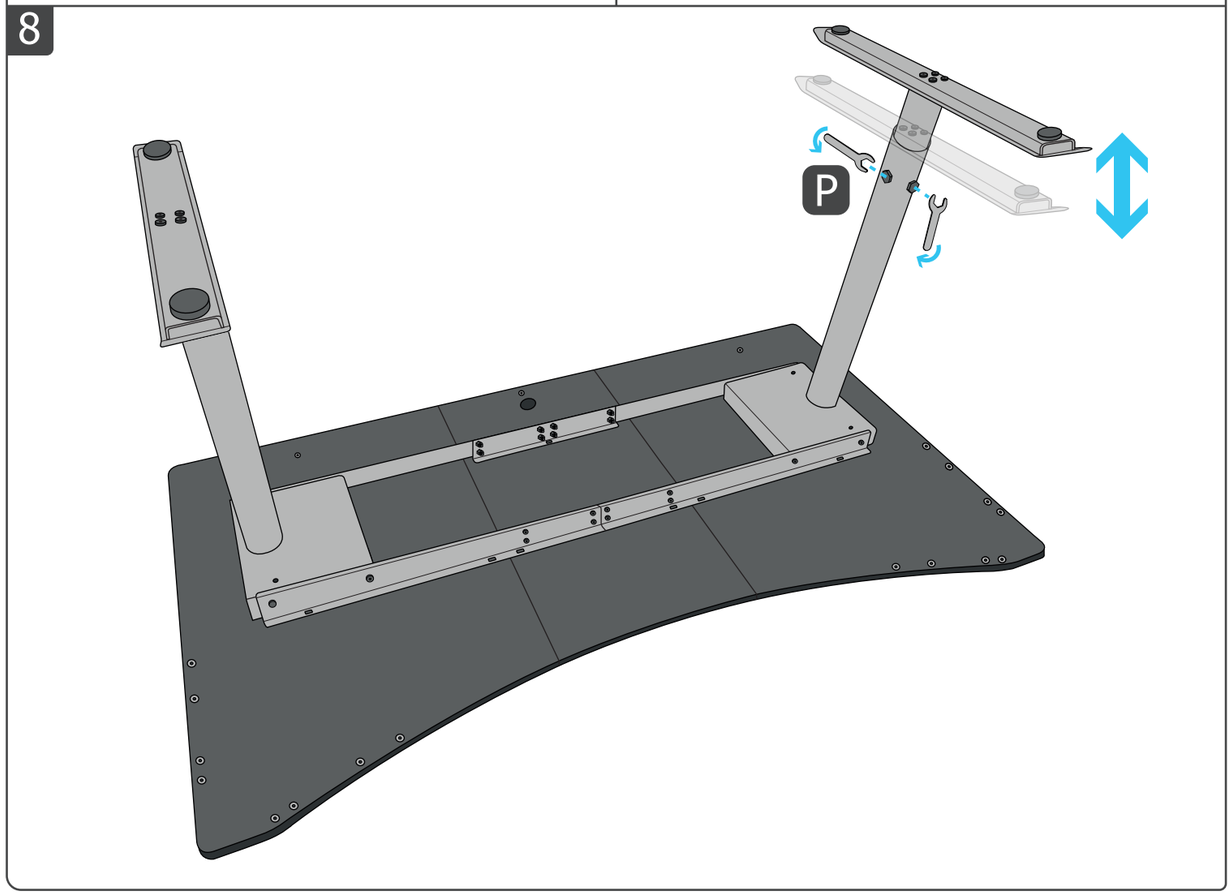

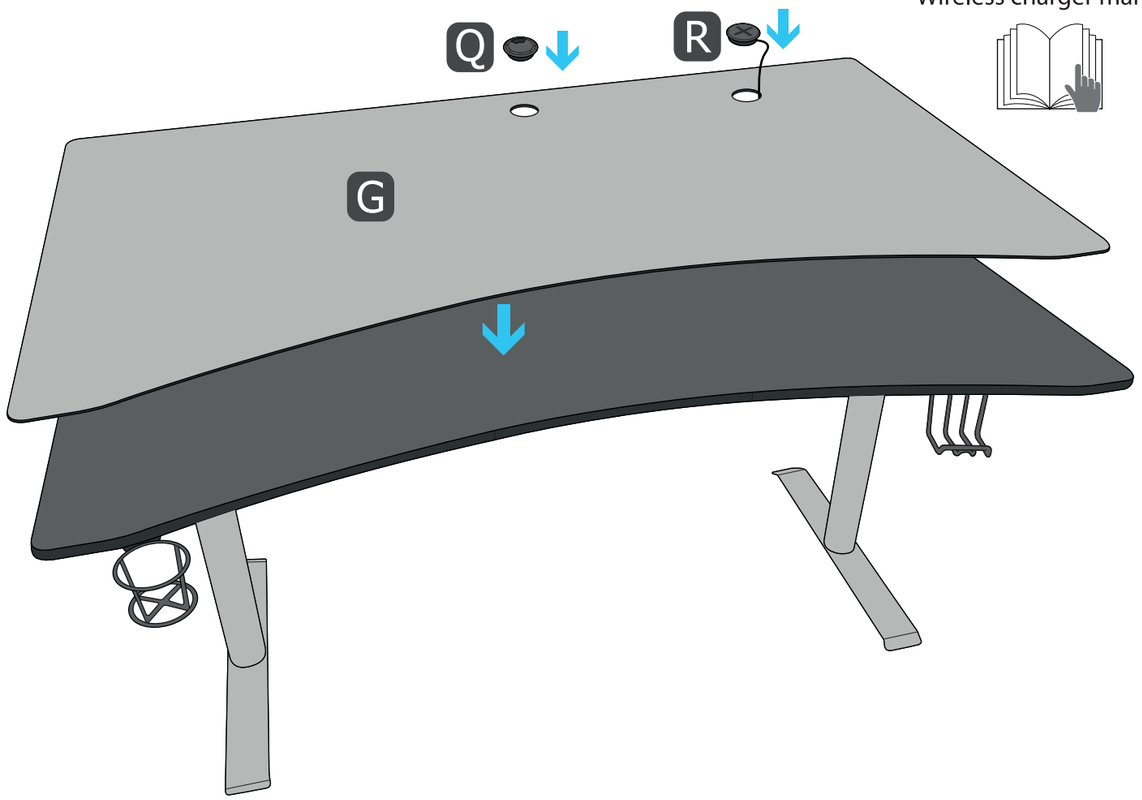

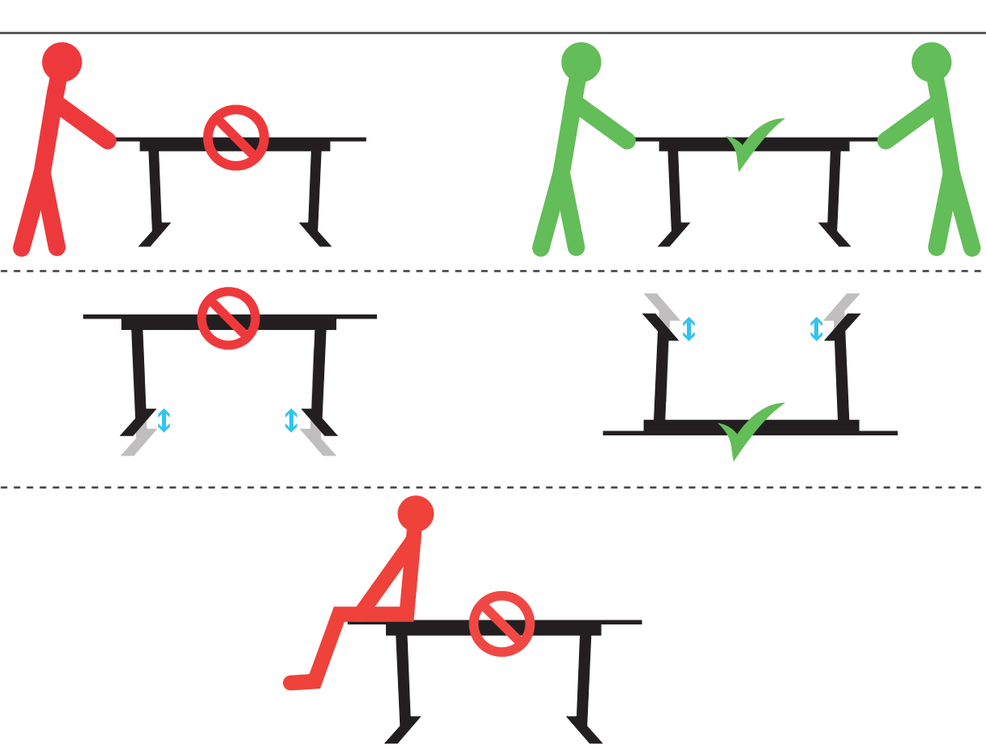

FAQ: www.trust.com/23542/faq

©2020 Trust International B.V. - All rights reserved | Laan van Barcelona 600, 3317DD, Dordrecht, NL

Trust

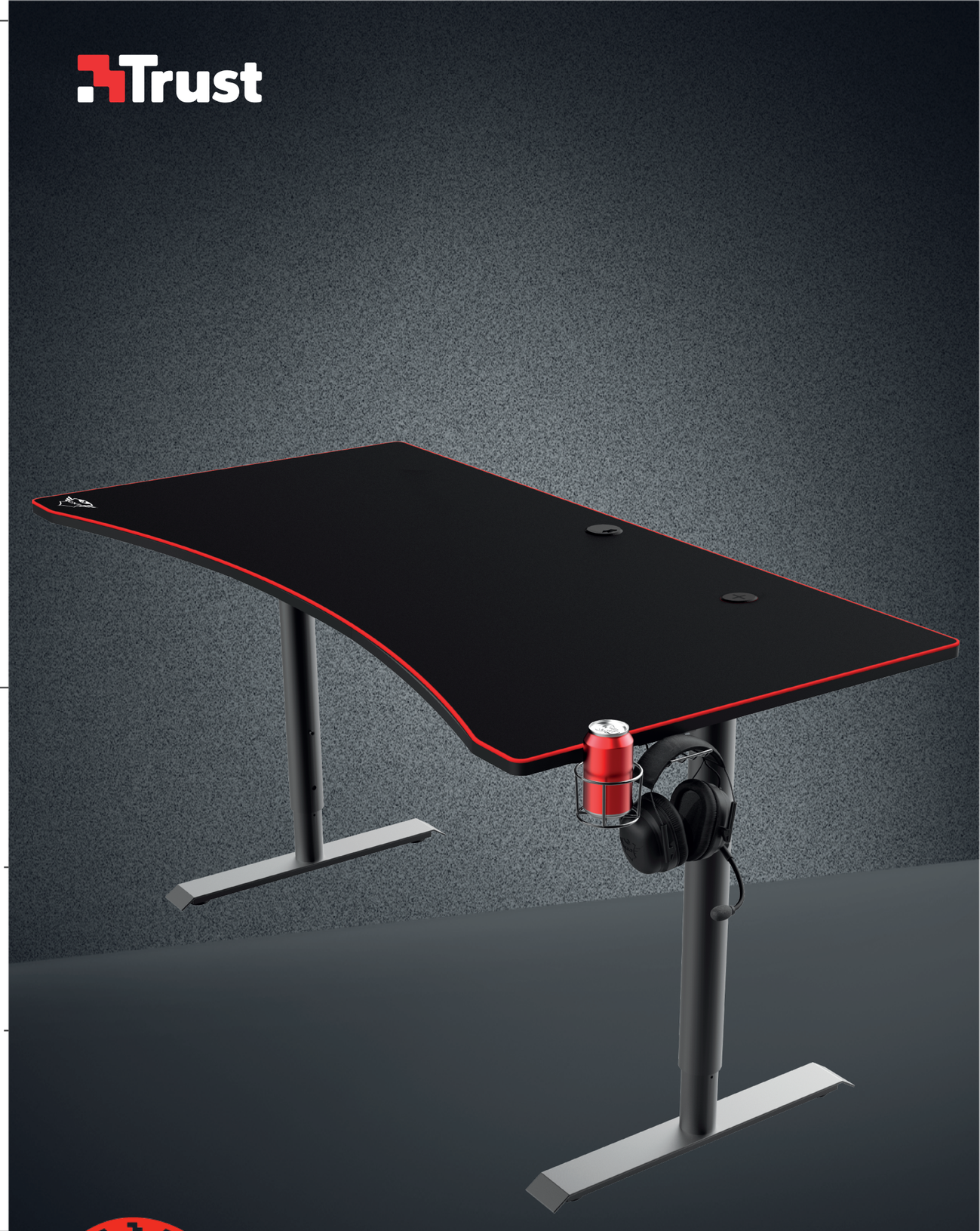

GXT

MAGNICUS | Gaming Desk

5

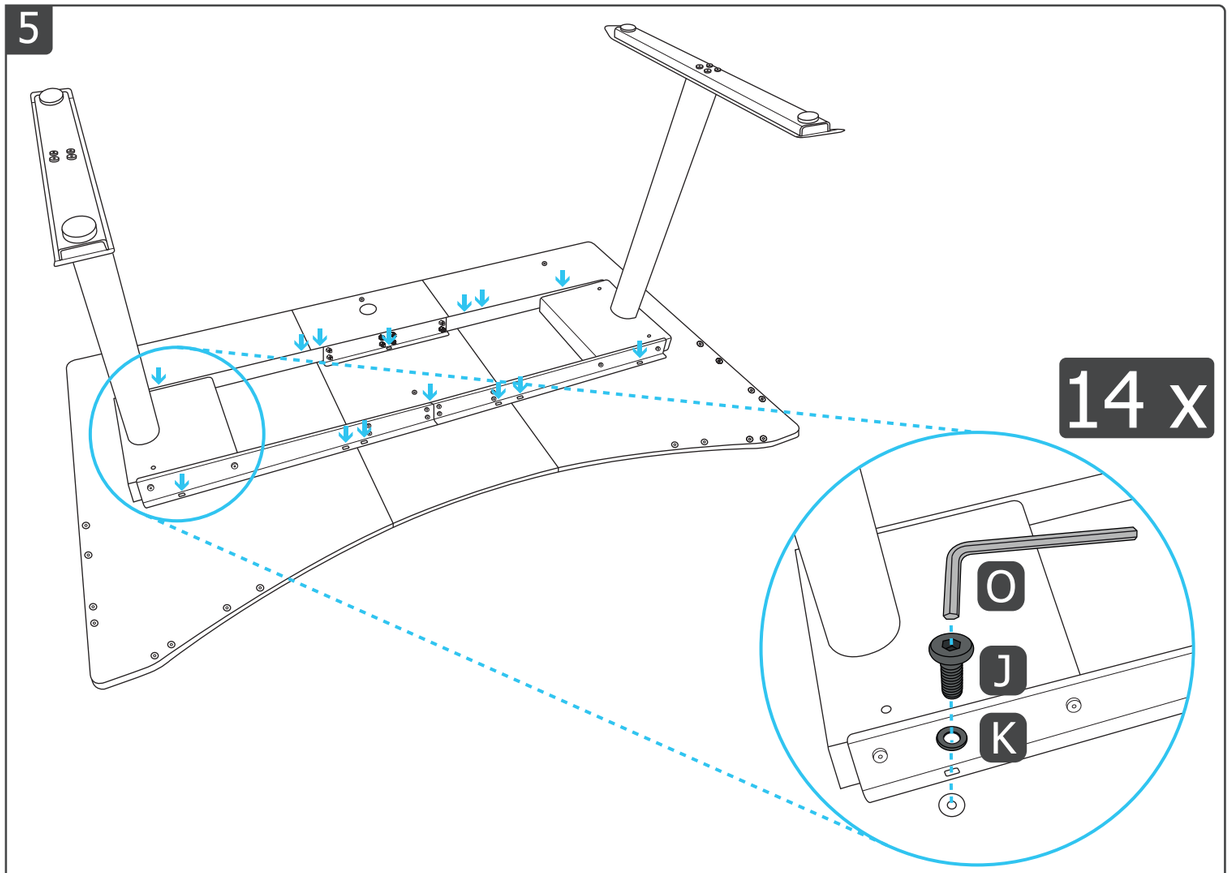

6

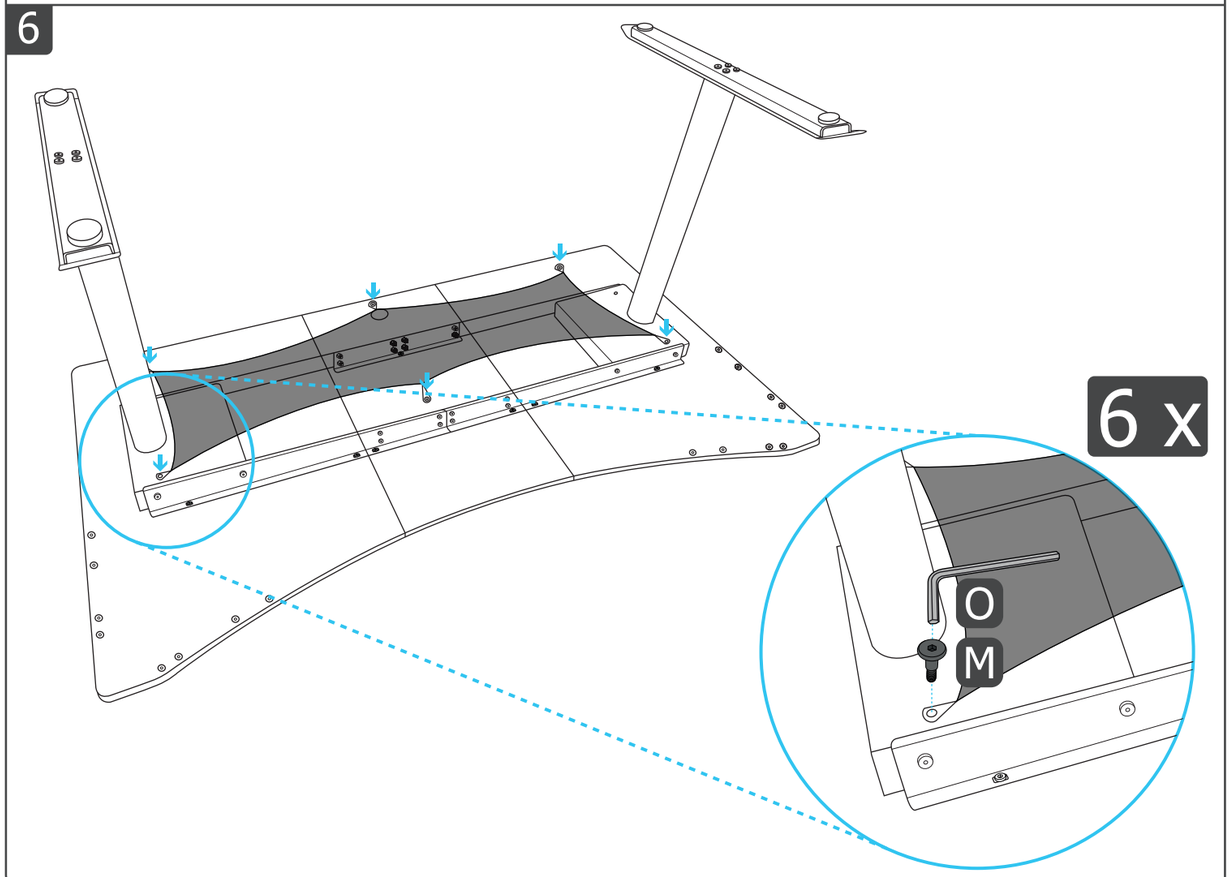

7

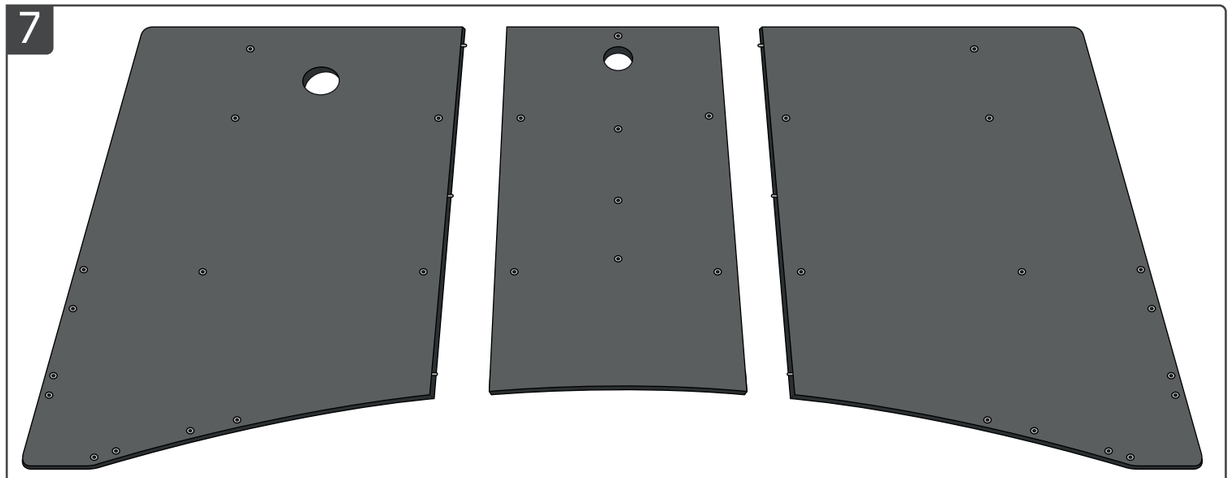

G

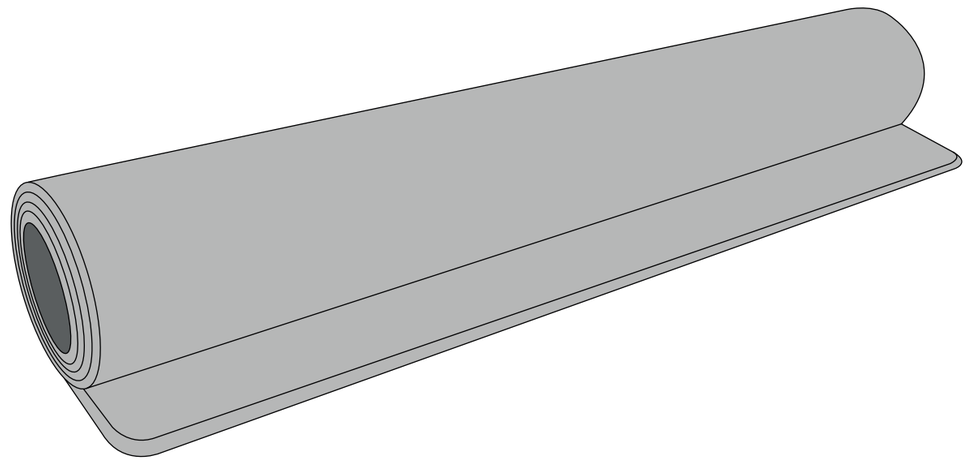

H

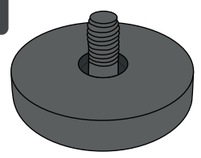

L



P

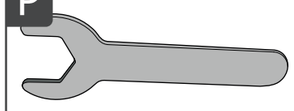

S

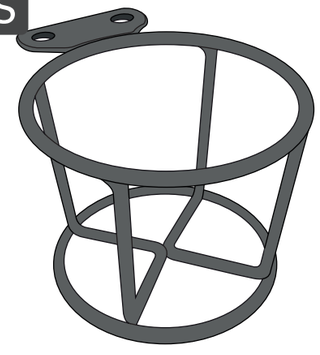

I

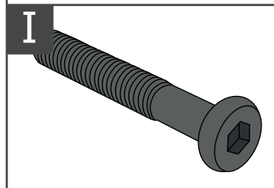

M

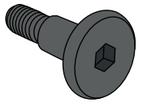

Q

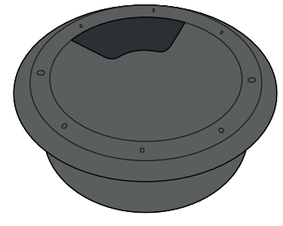

J

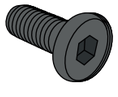

N

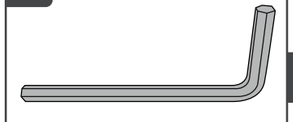

T



K



O



R

Wireless charger manual



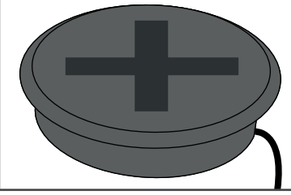

1

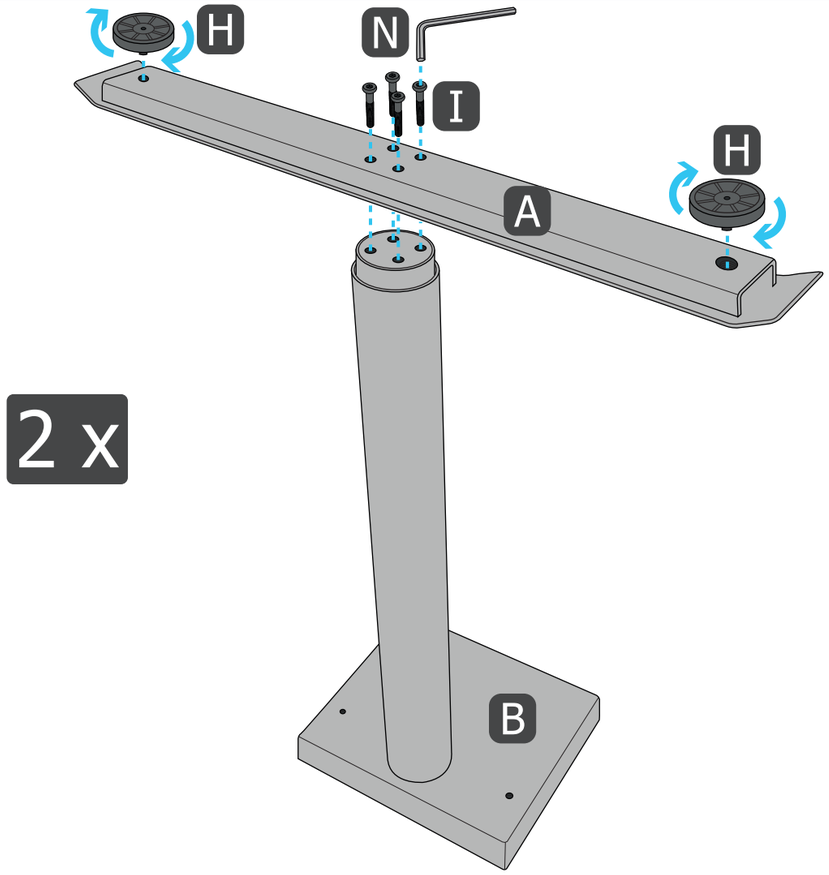

2

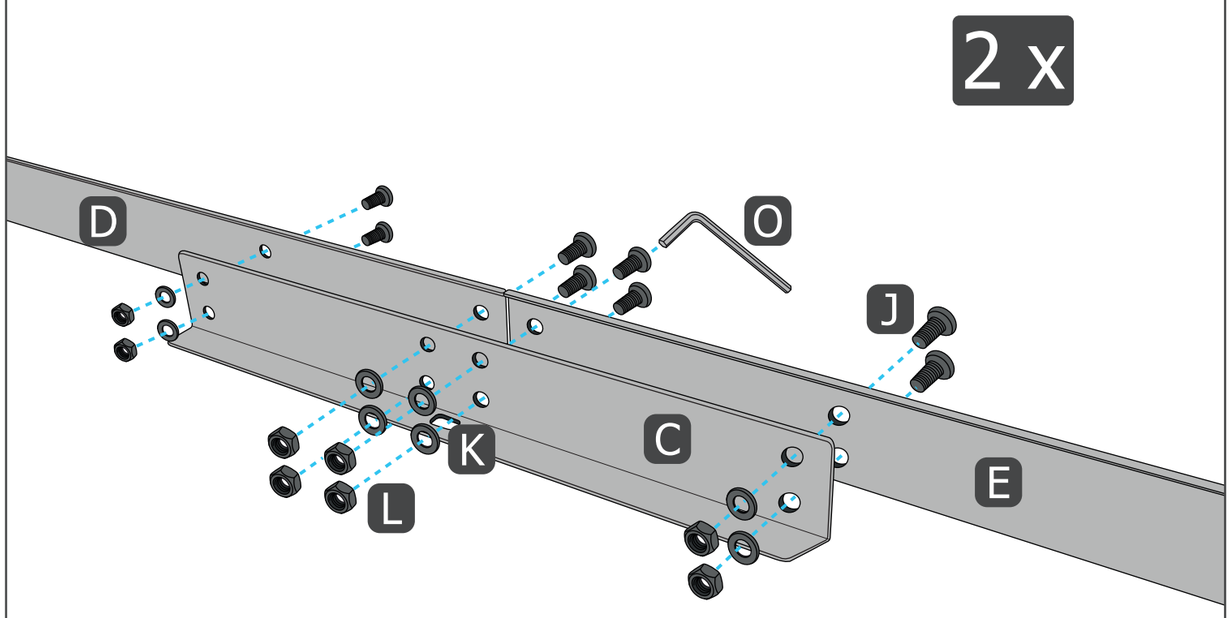

3

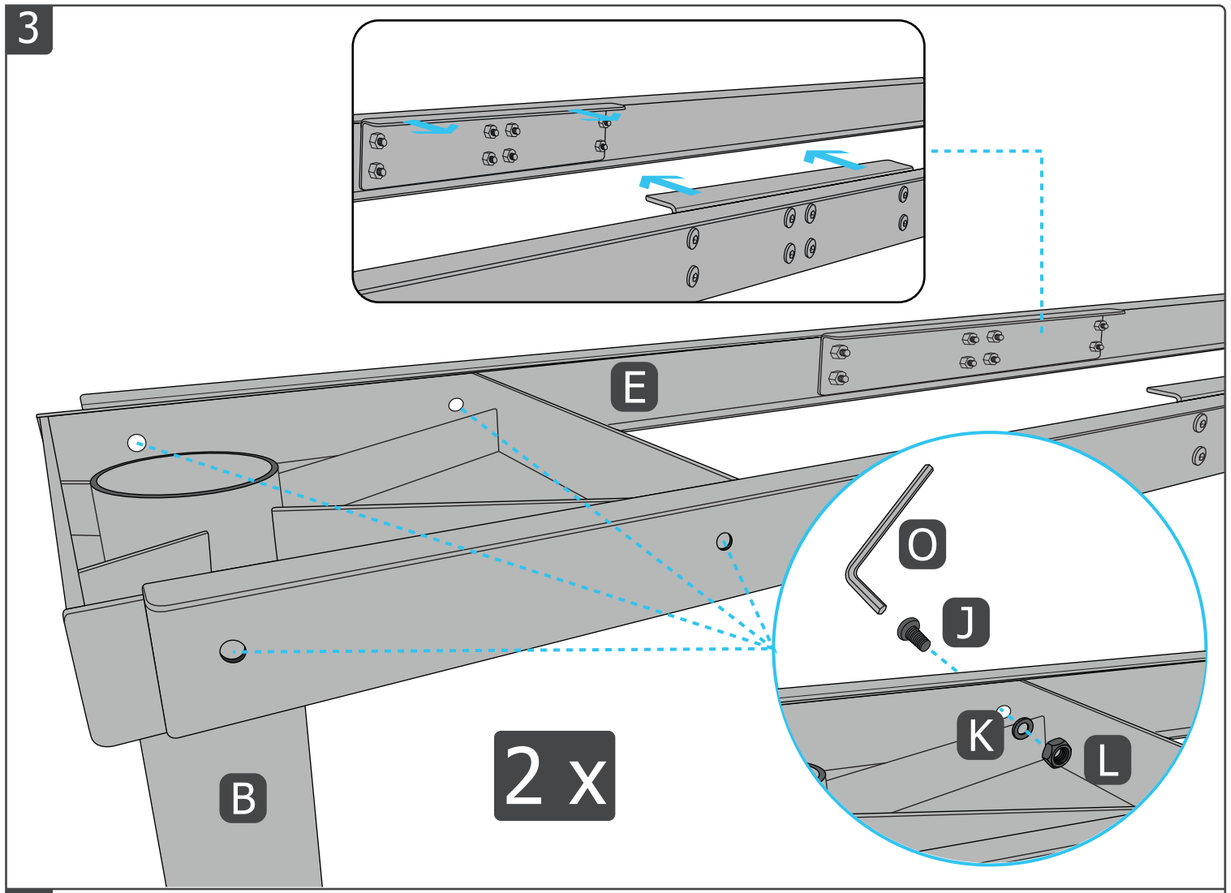

4

