ThinkCentre M75n
Hardware Maintenance Manual



Second Edition (December 2020)

© Copyright Lenovo 2020.

LIMITED AND RESTRICTED RIGHTS NOTICE: If data or software is delivered pursuant to a General Services Administration “GSA” contract, use, reproduction, or disclosure is subject to restrictions set forth in Contract No. GS-35F-05925.

Contents

About this manual iii

Chapter 1. Important safety information 1

General safety 1
Electrical safety 2
Safety inspection guide 3
Handling electrostatic discharge-sensitive devices 4
Grounding requirements 4
Safety notices (multi-lingual translations) 4

Chapter 2. Important service information 27

Strategy for replacing FRUs 27
Strategy for replacing a hard disk drive or a solid-state drive 27
Important notice for replacing a system board 27
How to use error codes 28
Strategy for replacing FRUs for CTO, special-bid, and standard models. 28
Product definition 28
FRU identification 28

Chapter 3. Product overview 29

Top 29
Front 30
Rear 31
Bottom 32

Chapter 4. Service checkout and symptom-to-FRU index 33

Service checkout 33
Problem determination tips 33
Symptom-to-FRU index 34
Hard disk drive boot error 34
Power supply problems 35
Beep symptoms 35
POST error codes 36
Miscellaneous error conditions 37
Undetermined problems 39

Chapter 5. Troubleshooting, diagnostics, and recovery 41

Basic procedure for resolving computer problems 41
Troubleshooting 41
Startup problems 42
Audio problems 43
Network problems 43
Performance problems 46
Storage drive problems 47
CD or DVD problems 47
Serial connector problems 48
USB device problems 48
Software problems 49
Diagnostics 49
Lenovo diagnostic tools 49
UEFI diagnostic program 49
Recovery 50
Restore system files and settings to an earlier point 50
Restore your files from a backup 50
Reset your computer 50
Use advanced options 50
Windows automatic recovery 51
Create and use a recovery USB device 51
Update the device driver 51

Chapter 6. Hardware removal and installation 53

Handling static-sensitive devices 53
Service tool kit 53
Major FRUs and CRUs (fan models) 54
Major FRUs and CRUs (fanless models) 55
System board 58
Removing and installing hardware (fan models) . . 59
External options 59
Power adapter and power cord 60
DIN rail bracket kit 61
Power adapter bracket kit 63
VESA mount bracket kit 67
Rear Wi-Fi antenna. 68
Bottom cover 69
Wi-Fi card 71
M.2 solid-state drive 72
Computer cover and rear I/O bracket 73
Coin-cell battery 75
System fan 76
Internal speaker 77
Heat sink 78
System board 79
Front Wi-Fi antenna and cable 81
Rear Wi-Fi antenna cable 82

© Copyright Lenovo 2020

Removing and installing hardware (fanless models) 83
External options 84
Power adapter and power cord 84
Heat sink cover 86
DIN rail bracket kit 87
Power adapter bracket kit 89
VESA mount bracket kit 92
I/O box 94
Rear Wi-Fi antenna 96
Bottom cover 97
Wi-Fi card 98
M.2 solid-state drives 100
System board and coin-cell battery 101
Left cover and front antenna cable 103
Right cover 105
Internal speaker 106
Rear antenna cable 107
Heat sink 108

Notices and trademarks 1

About this manual

This manual provides service and reference information for ThinkCentre® computers listed on the front cover.

Illustrations in this manual might look different from your product.

Use this manual along with the advanced diagnostic tests to troubleshoot problems.

Important: This manual is intended only for trained service technicians who are familiar with ThinkCentre computers. Use this manual along with the advanced diagnostic tests to troubleshoot problems effectively. Before servicing a ThinkCentre computer, be sure to read and understand Chapter 1 “Important safety information” on page 1.

© Copyright Lenovo 2020

Chapter 1. Important safety information

General safety

Follow these rules to ensure general safety:

- Observe good housekeeping in the area of the machines during and after maintenance.
- When lifting any heavy object:
  1. Ensure you can stand safely without slipping.
  2. Distribute the weight of the object equally between your feet.
  3. Use a slow lifting force. Never move suddenly or twist when you attempt to lift.
  4. Lift by standing or by pushing up with your leg muscles; this action removes the strain from the muscles in your back.

     Attention: Do not attempt to lift any objects that weigh more than 16 kg (35 lb) or objects that you think are too heavy for you.
- Do not perform any action that causes hazards to the customer, or that makes the equipment unsafe.
- Before you start the machine, ensure that other service representatives and the customer's personnel are not in a hazardous position.
- Place removed covers and other parts in a safe place, away from all personnel, while you are servicing the machine.
- Keep your tool case away from walk areas so that other people will not trip over it.
- Do not wear loose clothing that can be trapped in the moving parts of a machine. Ensure that your sleeves are fastened or rolled up above your elbows. If your hair is long, fasten it.
- Insert the ends of your necktie or scarf inside clothing or fasten it with a nonconductive clip, approximately 8 centimeters (3 inches) from the end.
- Do not wear jewelry, chains, metal-frame eyeglasses, or metal fasteners for your clothing.

  Remember: Metal objects are good electrical conductors.
- Wear safety glasses when you are: hammering, drilling, soldering, cutting wire, attaching springs, using solvents, or working in any other conditions that might be hazardous to your eyes.
- After service, reinstall all safety shields, guards, labels, and ground wires. Replace any safety device that is worn or defective.
- Reinstall all covers correctly before returning the machine to the customer.

CAUTION:



Keep fingers and other parts of your body away from hazardous, moving parts. If you suffer an injury, seek medical care immediately.

CAUTION:



Avoid contact with hot components inside the computer. During operation, some components become hot enough to burn the skin. Before you open the computer cover, turn off the computer, disconnect power, and wait approximately 10 minutes for the components to cool.

© Copyright Lenovo 2020

Electrical safety



CAUTION:
Electrical current from power, telephone, and communication cables can be hazardous. To avoid personal injury or equipment damage, disconnect the attached power cords, telecommunication systems, networks, and modems before you open the computer covers, unless instructed otherwise in the installation and configuration procedures.

Observe the following rules when working on electrical equipment.

Important: Use only approved tools and test equipment. Some hand tools have handles covered with a soft material that does not insulate you when working with live electrical currents. Many customers have, near their equipment, rubber floor mats that contain small conductive fibers to decrease electrostatic discharges. Do not use this type of mat to protect yourself from electrical shock.

- Find the room emergency power-off (EPO) switch, disconnecting switch, or electrical outlet. If an electrical accident occurs, you can then operate the switch or unplug the power cord quickly.
- Do not work alone under hazardous conditions or near equipment that has hazardous voltages.
- Disconnect all power before:
  - Performing a mechanical inspection
  - Working near power supplies
  - Removing or installing Field Replaceable Units (FRUs)
- Before you start to work on the machine, unplug the power cord. If you cannot unplug it, ask the customer to power-off the wall box that supplies power to the machine and to lock the wall box in the off position.
- If you need to work on a machine that has exposed electrical circuits, observe the following precautions:
  - Ensure that another person, familiar with the power-off controls, is near you.
    Remember: Another person must be there to switch off the power, if necessary.
  - Use only one hand when working with powered-on electrical equipment; keep the other hand in your pocket or behind your back.
    Remember: There must be a complete circuit to cause electrical shock. By observing the above rule, you may prevent a current from passing through your body.
  - When using a tester, set the controls correctly and use the approved probe leads and accessories for that tester.
  - Stand on suitable rubber mats (obtained locally, if necessary) to insulate you from grounds such as metal floor strips and machine frames.

  Observe the special safety precautions when you work with very high voltages; these instructions are in the safety sections of maintenance information. Use extreme care when measuring high voltages.
- Regularly inspect and maintain your electrical hand tools for safe operational condition.
- Do not use worn or broken tools and testers.
- *Never assume* that power has been disconnected from a circuit. First, *check* that it has been powered-off.
- Always look carefully for possible hazards in your work area. Examples of these hazards are moist floors, nongrounded power extension cables, power surges, and missing safety grounds.
- Do not touch live electrical circuits with the reflective surface of a plastic dental mirror. The surface is conductive; such touching can cause personal injury and machine damage.

- Do not service the following parts with the power on when they are removed from their normal operating places in a machine:
  - Power supply units
  - Pumps
  - Blowers and fans
  - Motor generators

  and similar units. (This practice ensures correct grounding of the units.)
- If an electrical accident occurs:
  - Use caution; do not become a victim yourself.
  - Switch off power.
  - Send another person to get medical aid.

Safety inspection guide

The intent of this inspection guide is to assist you in identifying potentially unsafe conditions on these products. Each machine, as it was designed and built, had required safety items installed to protect users and service personnel from injury. This guide addresses only those items. However, good judgment should be used to identify potential safety hazards due to attachment of features or options not covered by this inspection guide.

If any unsafe conditions are present, you must determine how serious the apparent hazard could be and whether you can continue without first correcting the problem.

Consider these conditions and the safety hazards they present:

- Electrical hazards, especially primary power (primary voltage on the frame can cause serious or fatal electrical shock).
- Explosive hazards, such as a damaged CRT face or bulging capacitor
- Mechanical hazards, such as loose or missing hardware

The guide consists of a series of steps presented in a checklist. Begin the checks with the power off, and the power cord disconnected.

Checklist:

1. Check exterior covers for damage (loose, broken, or sharp edges).
2. Power-off the computer. Disconnect the power cord.
3. Check the power cord for:
   a. A third-wire ground connector in good condition. Use a meter to measure third-wire ground continuity for 0.1 ohm or less between the external ground pin and frame ground.
   b. The power cord should be the appropriate type as specified in the parts listings.
   c. Insulation must not be frayed or worn.
4. Remove the cover.
5. Check for any obvious alterations. Use good judgment as to the safety of any alterations.
6. Check inside the unit for any obvious unsafe conditions, such as metal filings, contamination, water or other liquids, or signs of fire or smoke damage.
7. Check for worn, frayed, or pinched cables.

8. Check that the power-supply cover fasteners (screws or rivets) have not been removed or tampered with.

Handling electrostatic discharge-sensitive devices

Any computer part containing transistors or integrated circuits (ICs) should be considered sensitive to electrostatic discharge (ESD). ESD damage can occur when there is a difference in charge between objects. Protect against ESD damage by equalizing the charge so that the machine, the part, the work mat, and the person handling the part are all at the same charge.

Notes:

1. Use product-specific ESD procedures when they exceed the requirements noted here.
2. Make sure that the ESD protective devices you use have been certified (ISO 9000) as fully effective.

When handling ESD-sensitive parts:

- Keep the parts in protective packages until they are inserted into the product.
- Avoid contact with other people while handling the part.
- Wear a grounded wrist strap against your skin to eliminate static on your body.
- Prevent the part from touching your clothing. Most clothing is insulative and retains a charge even when you are wearing a wrist strap.
- Use the black side of a grounded work mat to provide a static-free work surface. The mat is especially useful when handling ESD-sensitive devices.
- Select a grounding system, such as those listed below, to provide protection that meets the specific service requirement.

  Note: The use of a grounding system is desirable but not required to protect against ESD damage.

  – Attach the ESD ground clip to any frame ground, ground braid, or green-wire ground.
  – Use an ESD common ground or reference point when working on a double-insulated or battery-operated system. You can use coax or connector-outside shells on these systems.
  – Use the round ground-prong of the ac plug on ac-operated computers.

Grounding requirements

Electrical grounding of the computer is required for operator safety and correct system function. Proper grounding of the electrical outlet can be verified by a certified electrician.

Safety notices (multi-lingual translations)

The caution and danger safety notices in this section are provided in the following languages:

- English
- Arabic
- Brazilian/Portuguese
- Chinese (simplified)
- Chinese (traditional)
- French
- German
- Hebrew

- Italian
- Korean
- Spanish



DANGER

Electrical current from power, telephone and communication cables is hazardous.

To avoid a shock hazard:

- **Do not connect or disconnect any cables or perform installation, maintenance, or reconfiguration of this product during an electrical storm.**
- **Connect all power cords to a properly wired and grounded electrical outlet.**
- **Connect to properly wired outlets any equipment that will be attached to this product.**
- **When possible, use one hand only to connect or disconnect signal cables.**
- **Never turn on any equipment when there is evidence of fire, water, or structural damage.**
- **Disconnect the attached power cords, telecommunications systems, networks, and modems before you open the device covers, unless instructed otherwise in the installation and configuration procedures.**
- **Connect and disconnect cables as described in the following tables when installing, moving, or opening covers on this product or attached devices.**

To Connect	To Disconnect
1. Turn everything OFF. 2. First, attach all cables to devices. 3. Attach signal cables to connectors. 4. Attach power cords to outlet. 5. Turn device ON.	1. Turn everything OFF. 2. First, remove power cords from outlet. 3. Remove signal cables from connectors. 4. Remove all cables from devices.



CAUTION:
When replacing the lithium battery, use only Part Number 45C1566 or an equivalent type battery recommended by the manufacturer. If your system has a module containing a lithium battery, replace it only with the same module type made by the same manufacturer. The battery contains lithium and can explode if not properly used, handled, or disposed of. *Do not:*

- **Throw or immerse into water**
- **Heat to more than 100°C (212°F)**
- **Repair or disassemble**

Dispose of the battery as required by local ordinances or regulations.

CAUTION:
When laser products (such as CD-ROMs, DVD-ROM drives, fiber optic devices, or transmitters) are installed, note the following:

- **Do not remove the covers. Removing the covers of the laser product could result in exposure to hazardous laser radiation. There are no serviceable parts inside the device.**
- **Use of controls or adjustments or performance of procedures other than those specified herein might result in hazardous radiation exposure.**

DANGER

Some laser products contain an embedded Class 3A or Class 3B laser diode. Note the following: Laser radiation when open. Do not stare into the beam, do not view directly with optical instruments, and avoid direct exposure to the beam.



≥18 kg (37 lb)



≥32 kg (70.5 lb)



≥55 kg (121.2 lb)

CAUTION:
Use safe practices when lifting.

CAUTION:
The power control button on the device and the power switch on the power supply do not turn off the electrical current supplied to the device. The device also might have more than one power cord. To remove all electrical current from the device, ensure that all power cords are disconnected from the power source.

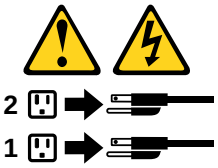



خـــطر

التيـار الكـهربـي المـوجـود بمصـدر الطـاقـة أو أجـهزة التليفـون أو أسـلاك الإتـصالات يشـكل خـطورة.

لـتفادي مخـاطـر الصـدمـات الكـهربـائـية:

لا تحاول توصيل أو فصل أي أسـلاك أو القـيام بعـمليات تـركيب أو صـيانـة أوإعـادة توصـيف لـهذا المنتج أثـناء وجـود عاصـفة كـهربـائـية.

يجـب تـوصـيل كـل أسـلاك الكـهربـاء فـي مخـارج كـهربـاء ذات تـوصـيلات أسـلاك وتـوصـيلات أرضـية صحيـحة
يجـب تـوصـيل أي جـهاز سـيتم الحـاقه بـهذا المـنتج فـي مخارج كـهربـاء ذات تـوصـيلات أسـلاك صحيحة.

وإن أمـكن يـجب اسـتخدام يـد واحـدة فـقط فـي تـوصـيل أو فصـل أسلاك الإشـارة.

لا تحـاول تشغـيل أي جـهاز إذا كـان هنـاك أثـر لحـرق أو مـياه أو تـلف بالمكـونـات
يجـب فصـل أسـلاك الكـهربـاء وأنـظمة الاتصـالات وشـبكات الاتصـال وأجـهزة المـودم الملحـقة قـبل فـتح أغطية الجهاز، مـالـم يـتم طـلب خـلاف ذلك فـي التـعليـمات الخـاصة بالتـركيب والتـوصـيف.
قم بتوصيل وفصل الأسلاك كما هو موضح في الجدول التالي وذلك عند القيام بعمليات التركيب أو النقل أو فتح أغطية هذا المنتج أو الأجهزة الملحقة.

للتوصيل:	للفصل:
قم بإيقاف كل شيء.	قم بإيقاف كل شيء.
أولا، قم بتوصيل كل الأسلاك بالأجهزة.	أولا، قم بفصل كل أسلاك الكهرباء من المخرج.
قم بتوصيل أسلاك الإشارة في لموصلات.	قم بفصل أسلاك الإشارة من الموصلات.
قم بتوصيل أسلاك الكهرباء في المخارج.	قم بفصل كل الأسلاك من الأجهزة.
قم بتشغيل الجهاز.	



تنبيـــه :
عند استبدال البطارية الليثيوم، استخدم فقط رقم الجزء الخاص Part Number 45C1566
أو نوع أخر يكون على نفس مستوى الكفاءة يحدده لك المصنع.
اذا كان النظام الخاص يستخدم معه بطارية ليثيوم قم باستبدالها بنفس النوع الذي تم صناعته من خلال نفس المصنع. تحتوي البطارية على مادة الليثيوم ويمكن أن تنفجرفي حالة عدم استخدامها أو التعامل معها بطريقة صحيحة أو عند التخلص منها بطريقة خطأ.

لا تقم بـــ:
- القاء البطارية أو غمرها في الماء
- تسخينها أعلى من ١٠٠ درجة مئوية°و(٢١٢ ° فهرنـهيت)
- بتصليحها أو فكها

تخلص من البطارية طبقا للقانون أو النظام المحلي .



تنبيـــه :
أثناء تركيب منتجات ليزر (مثل CD-ROMsأو وحدة تشغيل DVDأو أجهزة Fiber Optic أو وحدات الارسال) يجب مراعاة الآتي:

لا تنزع الأغطية. قد ينتج عن نزع أغطية منتج الليزر انفجار أشعة الليزر شديدة الخطورة.
لا يوجد أجزاء يمكن تغييرها داخل الجهاز. قد ينتج عن استخدام تحكمات أو تعديلات أو عمل أي تصرفات أخرى تخالف ما هو محددا هنا الى انفجار أشعة شديدة الخطورة.



خطـــر

تحتوى بعض منتجات الليزر على الفئة دايود ليزر مدمج من الفئة Class 3Aأو Class 3B. يجب مراعاة الآتي .

أشعة الليزر عند الفتح. لا تحدق الى الاشعاع و لا تنظر اليه مباشرة بواسطة أي أجهزة مرئية وتجنب التعرض المباشر للاشعاع .



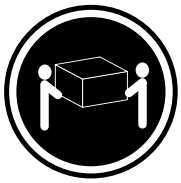

≥18 kg (37 lb)



≥32 kg (70.5 lb)



≥55 kg (121.2 lb)

تنبيه :
يجب استخدام ممارسات آمنة عند الرفع



تنبيـــه :
لا يقم زر التحكم في التشغيل الموجود على الجهاز والمفتاح الكهربائي الموجود على لوحة التحكم بايقاف التيار الكهربائي المار بالجهاز. قد يكون للجهاز أكثر من سلك كهربائي واحد.
لايقاف التيار الكهربائي المار بالجهاز، تأكد من فصل جميع أسلاك الكهرباء من مصدر الكهرباء .

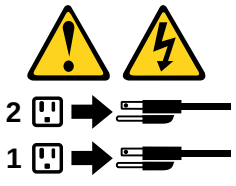



PERIGO

A corrente elétrica proveniente de cabos de alimentação, de telefone e de comunicações é perigosa.

Para evitar risco de choque elétrico:

- Não conecte nem desconecte nenhum cabo ou execute instalação, manutenção ou reconfiguração deste produto durante uma tempestade com raios.
- Conecte todos os cabos de alimentação a tomadas elétricas corretamente instaladas e aterradas.
- Todo equipamento que for conectado a este produto deve ser conectado a tomadas corretamente instaladas.
- Quando possível, utilize apenas uma das mãos para conectar ou desconectar cabos de sinal.
- Nunca ligue nenhum equipamento quando houver evidência de fogo, água ou danos estruturais.
- Antes de abrir tampas de dispositivos, desconecte cabos de alimentação, sistemas de telecomunicação, redes e modems conectados, a menos que especificado de maneira diferente nos procedimentos de instalação e configuração.
- Conecte e desconecte os cabos conforme descrito na tabela apresentada a seguir ao instalar, mover ou abrir tampas deste produto ou de dispositivos conectados.

Para Conectar:	**Para Desconectar:**
1. DESLIGUE Tudo. 2. Primeiramente, conecte todos os cabos aos dispositivos. 3. Conecte os cabos de sinal aos conectores. 4. Conecte os cabos de alimentação às tomadas. 5. LIGUE os dispositivos.	1. DESLIGUE Tudo. 2. Primeiramente, remova os cabos de alimentação das tomadas. 3. Remova os cabos de sinal dos conectores. 4. Remova todos os cabos dos dispositivos.



CUIDADO:

Ao substituir a bateria de lítio, utilize apenas uma bateria com Número de Peça 45C1566 ou um tipo de bateria equivalente recomendado pelo Se o seu sistema possui um módulo com uma bateria de lítio, substitua-o apenas por um módulo do mesmo tipo e do mesmo fabricante. A bateria contém lítio e pode explodir se não for utilizada, manuseada ou descartada de maneira correta.

Não:

- Jogue ou coloque na água
- Aqueça a mais de 100°C (212°F)
- Conserte nem desmonte

Descarte a bateria conforme requerido pelas leis ou regulamentos locais.



PRECAUCIÓN:

Quando produtos a laser (como unidades de CD-ROMs, unidades de DVD-ROM, dispositivos de fibra ótica ou transmissores) estiverem instalados, observe o seguinte:

- Não remova as tampas. A remoção das tampas de um produto a laser pode resultar em exposição prejudicial à radiação de laser. Não existem peças que podem ser consertadas no interior do dispositivo.
- A utilização de controles ou ajustes ou a execução de procedimentos diferentes dos especificados aqui pode resultar em exposição prejudicial à radiação.

PERIGO

Alguns produtos a laser contêm diodo de laser integrado da Classe 3A ou da Classe 3B. Observe o seguinte:

Radiação a laser quando aberto. Não olhe diretamente para o feixe a olho nu ou com instrumentos ópticos e evite exposição direta ao feixe.





≥18 kg (37 lb)



≥32 kg (70.5 lb)



≥55 kg (121.2 lb)

CUIDADO:

Utilize procedimentos de segurança para levantar equipamentos.



CUIDADO:

O botão de controle de alimentação do dispositivo e o botão para ligar/desligar da fonte de alimentação não desligam a corrente elétrica fornecida ao dispositivo. O dispositivo também pode ter mais de um cabo de alimentação. Para remover toda a corrente elétrica do dispositivo, assegure que todos os cabos de alimentação estejam desconectados da fonte de alimentação.

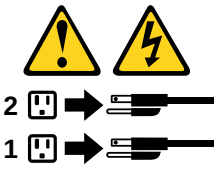



危险

电源、电话和通信电缆中的电流是危险的。

为避免电击危险：

- 请勿在雷电期间连接或断开任何电缆的连接，或者对本产品进行安装、维护或重新配置。
- 将所有电源线连接到正确连线和妥善接地的电源插座。
- 将所有要连接到该产品的设备连接到正确连线的插座。
- 如果可能，请仅使用一只手来连接或断开信号电缆的连接。
- 切勿在有火、水、结构损坏迹象的情况下开启任何设备。
- 在打开设备外盖之前请断开已连接的电源线、远程通信系统、网络和调制解调器，除非在安装和配置过程中另有说明。
- 当安装、移动或打开该产品或连接设备的外盖时，请按照下表所述来连接或断开电缆的连接。

要连接	要断开连接
1. 切断所有电源。 2. 首先将所有电缆连接到设备。 3. 将信号电缆连接到接口。 4. 将电源线连接到插座。 5. 开启设备。	1. 切断所有电源。 2. 首先从插座上拔出电源线。 3. 从接口上拔出信号电缆。 4. 从设备上拔出所有电缆。



警告：
更换锂电池时，请仅使用部件号为 45C1566 的电池或制造商推荐的同类电池。如果您的系统有包含锂电池的模块，请仅使用同一制造商生产的相同模块类型来替换该模块。该电池中含有锂，如果使用、操作或处理不当，可能会发生爆炸。

切勿：

- 投入或浸入水中
- 加热到 100℃（212℉）以上
- 维修或拆卸

请按照当地法令或条例的要求处理电池。



警告：
安装激光产品（例如 CD-ROM、DVD-ROM 驱动器、光纤设备或发射设备）时，请注意以下声明：

- 请勿卸下外盖。卸下激光产品的外盖可能导致遭受激光辐射的危险。该设备内没有可维修的部件。
- 如果不按照此处指定的过程进行控制、调整或操作，则有可能导致遭受辐射的危险。



危险

某些激光产品包含嵌入式 3A 类或 3B 类激光二极管。请注意以下声明：

打开后有激光辐射。请勿注视光束，请勿直接用光学仪器查看，并请避免直接暴露在光束中。





≥18 千克（37 磅） ≥32 千克（70.5 磅） ≥55 千克（121.2 磅）

警告：
抬起时请采取安全措施。



警告：
设备上的电源控制按钮和电源上的电源开关不会切断供给该设备的电流。该设备还可能有多条电源线。要切断该设备的所有电流，请确保所有电源线都与电源断开连接。

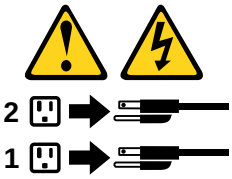



危險

電源、電話及通訊纜線上的電流都具有危險性。
若要避免觸電危險：
- 請勿在雷雨期間，連接或拔除纜線、執行安裝、維護或重新配置本產品。
- 將所有電源線連接到正確配線及接地的電源插座。
- 任何與本產品連接的設備都必須連接到配線妥當的電源插座。
- 請盡可能用單手連接或拔除信號線。
- 發生火災、水災或結構損害時，絕對不要開啟任何設備。
- 除非在安裝及配置程序中另有指示，否則在開啟裝置機蓋之前，請拔掉連接的電源線、電信系統、網路及數據機。
- 安裝、移動或開啟本產品或附屬裝置的機蓋時，請遵循下列說明連接及拔掉纜線。

連線	切斷連線
1. 關閉所有開關。 2. 首先，連接所有接線到裝置。 3. 連接信號線到接頭。 4. 連接電源線到插座。 5. 開啟裝置。	1. 關閉所有開關。 2. 首先，拔掉插座上的電源線。 3. 拔掉接頭上的信號線。 4. 拔掉裝置上所有接線。



警告：
更換鋰電池時，請僅使用產品編號 **45C1566** 或製造商所建議的同類型電池。
如果您的系統中含有鋰電池模組，請僅使用同一家製造商所生產的相同模組進行更換。
如果未以正確方式使用、處理或棄置含鋰的電池，會有爆炸的危險。
請勿：

- 沾溼或浸入水中
- 置於 **100°C (212°F)** 以上的高溫環境
- 修理或拆開

請按照各地區有關廢棄電池的法令和規定處理舊電池。



警告：
- 請勿移除機蓋。移除雷射產品的機蓋，可能會導致暴露在危險的雷射輻射中。裝置內部並無可自行維修的零件。
- 利用或執行非本文中所指定的控制、調整及執行程序，可能會導致危險的輻射外洩。



危險

部分雷射產品含有內嵌式 **Class 3A** 或 **Class 3B** 雷射二極體。請注意下列事項：
在開啟光碟機時，會發生雷射輻射。請勿直視光束或用光學儀器直接檢視，並避免直接暴露在光束中。





≥ 18 公斤（37 磅） ≥ 32 公斤（70.5 磅） ≥ 55 公斤（121.2 磅）

警告：
搬運時請注意安全。



警告：
裝置上的電源控制按鈕及電源供應器上的電源開關，無法關閉裝置所產生的電流。
該裝置可能有多條電源線。若要除去裝置流出的所有電流，請確認已切斷所有電源線的電源。

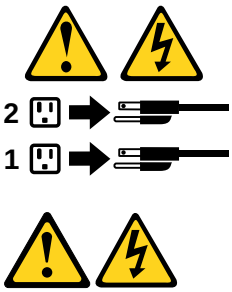

DANGER

Le courant électrique provenant de l'alimentation, du téléphone et des câbles de transmission peut présenter un danger.

Pour éviter tout risque de choc électrique :

- Ne manipulez aucun câble et n'effectuez aucune opération d'installation, d'entretien ou de reconfiguration de ce produit au cours d'un orage.
- Branchez tous les cordons d'alimentation sur un socle de prise de courant correctement câblé et mis à la terre.
- Branchez sur des socles de prise de courant correctement câblés tout équipement connecté à ce produit.
- Lorsque cela est possible, n'utilisez qu'une seule main pour connecter ou déconnecter les câbles d'interface.
- Ne mettez jamais un équipement sous tension en cas d'incendie ou d'inondation, ou en présence de dommages matériels.
- Avant de retirer les carters de l'unité, mettez celle-ci hors tension et déconnectez ses cordons d'alimentation, ainsi que les câbles qui la relient aux réseaux, aux systèmes de télécommunication et aux modems (sauf instruction contraire mentionnée dans les procédures d'installation et de configuration).
- Lorsque vous installez, que vous déplacez, ou que vous manipulez le présent produit ou des périphériques qui lui sont raccordés, reportez-vous aux instructions ci-dessous pour connecter et déconnecter les différents cordons.

Connexion	Déconnexion
1. Mettez les unités HORS TENSION. 2. Commencez par brancher tous les cordons sur les unités. 3. Branchez les câbles d'interface sur des connecteurs. 4. Branchez les cordons d'alimentation sur des prises. 5. Mettez les unités SOUS TENSION.	1. Mettez les unités HORS TENSION. 2. Débranchez les cordons d'alimentation des prises. 3. Débranchez les câbles d'interface des connecteurs. 4. Débranchez tous les câbles des unités.



ATTENTION:

Remplacer la pile au lithium usagée par une pile de référence identique exclusivement, (référence 45C1566), ou suivre les instructions du fabricant qui en définit les équivalences. Si votre système est doté d'un module contenant une pile au lithium, vous devez le remplacer uniquement par un module identique, produit par le même fabricant. La pile contient du lithium et peut exploser en cas de mauvaise utilisation, de mauvaise manipulation ou de mise au rebut inappropriée.

Ne pas :

- **la jeter à l'eau,**
- **l'exposer à des températures supérieures à 100°C,**
- **chercher à la réparer ou à la démonter.**

Ne pas mettre la pile à la poubelle. Pour la mise au rebut, se reporter à la réglementation en vigueur.



ATTENTION:

Si des produits à laser (tels que des unités de CD-ROM, de DVD-ROM, des unités à fibres optiques, ou des émetteurs) sont installés, prenez connaissance des informations suivantes :

- **Ne retirez pas le carter. En ouvrant l'unité de CD-ROM ou de DVD-ROM, vous vous exposez au rayonnement dangereux du laser. Aucune pièce de l'unité n'est réparable.**
- **Pour éviter tout risque d'exposition au rayon laser, respectez les consignes de réglage et d'utilisation des commandes, ainsi que les procédures décrites dans le présent manuel.**



DANGER

Certains produits à laser contiennent une diode à laser intégrée de classe 3A ou 3B. Prenez connaissance des informations suivantes:

Rayonnement laser lorsque le carter est ouvert. Evitez toute expositiondirecte au rayon laser. Evitez de regarder fixement le faisceau ou del'observer à l'aide d'instruments optiques.





≥18 kg (37 lb) ≥32 kg (70.5 lb) ≥55 kg (121.2 lb)

ATTENTION:

Soulevez la machine avec précaution.



ATTENTION:

L'interrupteur de contrôle d'alimentation de l'unité et l'interrupteur dubloc d'alimentation ne coupent pas le courant électrique alimentantl'unité. En outre, le système peut être équipé de plusieurs cordonsd'alimentation. Pour mettre l'unité hors tension, vous devez déconnectertous les cordons de la source d'alimentation.

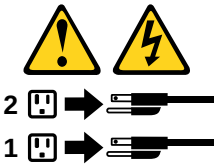



VORSICHT

An Netz-, Telefon- und Datenleitungen können gefährliche Spannungen anliegen.

Aus Sicherheitsgründen:

- **Bei Gewitter an diesem Gerät keine Kabel anschließen oder lösen. Ferner keine Installations-, Wartungs- oder Rekonfigurationsarbeiten durchführen.**
- **Gerät nur an eine Schutzkontaktsteckdose mit ordnungsgemäß geerdetem Schutzkontakt anschließen.**
- **Alle angeschlossenen Geräte ebenfalls an Schutzkontaktsteckdosen mit ordnungsgemäß geerdetem Schutzkontakt anschließen.**
- **Die Signalkabel nach Möglichkeit einhändig anschließen oder lösen, um einen Stromschlag durch Berühren von Oberflächen mit unterschiedlichem elektrischem Potenzial zu vermeiden.**
- **Geräte niemals einschalten, wenn Hinweise auf Feuer, Wasser oder Gebäudeschäden vorliegen.**

- **Die Verbindung zu den angeschlossenen Netzkabeln, Telekommunikationssystemen, Netzwerken und Modems ist vor dem Öffnen des Gehäuses zu unterbrechen, sofern in den Installations- und Konfigurationsprozeduren keine anders lautenden Anweisungen enthalten sind.**
- **Zum Installieren, Transportieren und Öffnen der Abdeckungen des Computers oder der angeschlossenen Einheiten die Kabel gemäß der folgenden Tabelle anschließen und abziehen.**

Zum Anschließen der Kabel gehen Sie wie folgt vor	Zum Abziehen der Kabel gehen Sie wie folgt vor
1. Schalten Sie alle Einheiten AUS. 2. Schließen Sie erst alle Kabel an die Einheiten an. 3. Schließen Sie die Signalkabel an die Buchsen an. 4. Schließen Sie die Netzkabel an die Steckdose an. 5. Schalten Sie die Einheit EIN.	1. Schalten Sie alle Einheiten AUS. 2. Ziehen Sie zuerst alle Netzkabel aus den Netzsteckdosen. 3. Ziehen Sie die Signalkabel aus den Buchsen. 4. Ziehen Sie alle Kabel von den Einheiten ab.



CAUTION:

Eine verbrauchte Lithiumbatterie nur durch eine Batterie mit der Teilenummer 45C1566 oder eine gleichwertige, vom Hersteller empfohlene Batterie ersetzen. Enthält das System ein Modul mit einer Lithiumbatterie, dieses nur durch ein Modul desselben Typs und von demselben Hersteller ersetzen. Die Batterie enthält Lithium und kann bei unsachgemäßer Verwendung, Handhabung oder Entsorgung explodieren.

Die Batterie nicht:

- mit Wasser in Berührung bringen.
- über 100 C erhitzen.
- reparieren oder zerlegen.

Die örtlichen Bestimmungen für die Entsorgung von Sondermüll beachten.



ACHTUNG:

Bei der Installation von Lasergeräten (wie CD-ROM-Laufwerken, DVD- aufwerken, Einheiten mit Lichtwellenleitertechnik oder Sendern) Folgendes beachten:

- **Die Abdeckungen nicht entfernen. Durch Entfernen der Abdeckungen des Lasergeräts können gefährliche Laserstrahlungen freigesetzt werden. Das Gerät enthält keine zu wartenden Teile.**
- **Werden Steuerelemente, Einstellungen oder Durchführungen von Prozeduren anders als hier angegeben verwendet, kann gefährliche Laserstrahlung auftreten.**



VORSICHT

Einige Lasergeräte enthalten eine Laserdiode der Klasse 3A oder 3B. Beachten Sie Folgendes:

Laserstrahlung bei geöffneter Verkleidung. Nicht in den Strahl blicken. Keine Lupen oder Spiegel verwenden. Strahlungsbereich meiden.





≥18 kg ≥32 kg ≥55 kg

ACHTUNG:

Arbeitsschutzrichtlinien beim Anheben der Maschine beachten.



ACHTUNG:

Mit dem Netzschalter an der Einheit und am Netzteil wird die Stromversorgung für die Einheit nicht unterbrochen. Die Einheit kann auch mit mehreren Netzkabeln ausgestattet sein. Um die Stromversorgung für die Einheit vollständig zu unterbrechen, müssen alle zum Gerät führenden Netzkabel vom Netz getrennt werden.

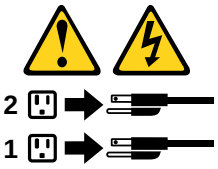



סכנה

זרם חשמלי המועבר בכבלי חשמל, טלפון ותקשורת הוא מסוכן.

כדי להימנע מסכנת התחשמלות:

- אל תחברו או תנתקו כבלים, ואל תבצעו פעולת התקנה, תחזוקה או שינוי תצורה במוצר זה במהלך סופת ברקים.
- חברו את כל כבלי החשמל לשקע חשמל מחווט ומוארק כהלכה.
- חברו כל ציוד שיחובר למוצר זה לשקעי חשמל מחווטים כהלכה.
- במידת האפשר, השתמשו ביד אחת בלבד לחיבור או לניתוק של כבלי אותות.
- לעולם אל תפעילו ציוד כלשהו כאשר יש עדות לנזק מבני או לנזק כתוצאה מאש או ממים.
- נתקו את כבלי החשמל, מערכות התקשורת, התקני הרשת והמודמים המחוברים לפני פתיחת כיסויי ההתקן, אלא אם הליכי ההתקנה וקביעת התצורה מורים אחרת.
- בעת התקנה, העברה או פתיחת כיסויים במוצר זה או בהתקנים המחוברים, חברו ונתקו את הכבלים כמתואר בטבלה שלהלן.

כדי לחבר	כדי לנתק
1. כבו הכל. 2. ראשית, חברו את כל הכבלים להתקנים. 3. חברו את כבלי האותות למחברים. 4. חברו את כבלי החשמל לשקעים. 5. הפעילו את ההתקן.	1. כבו הכל. 2. ראשית, נתקו את כבלי החשמל מהשקעים. 3. נתקו את כבלי האותות מהמחברים. 4. הסירו את כל הכבלים מההתקנים.



זהירות:
בעת החלפת סוללת הליתיום, השתמשו רק בסוללה בעלת מק"ט 45C1566 או בסוג תואם שהומלץ על ידי היצרן. אם המערכת כוללת מודול המכיל סוללת ליתיום, החליפו אותו רק במודול מאותו סוג ומתוצרת אותו יצרן. הסוללה מכילה ליתיום, ועלולה להתפוצץ אם לא משתמשים ומטפלים בה או משליכים אותה כיאות.

לעולם:

- אל תטבלו במים
- אל תחממו לטמפרטורה הגבוהה מ-100°C (212°F)
- אל תתקנו או תפרקו

השליכו את הסוללה כנדרש לפי התקנות והחוקים המקומיים.



זהירות:
בעת התקנת מוצרי לייזר (כגון כונני תקליטורים ו-DVD, התקני סיב אופטי או משדרים), שימו לב לאזהרות הבאות:

- אל תסירו את הכיסויים. הסרת הכיסויים של מוצר הלייזר עלולה לגרום לחשיפה לקרינת לייזר מסוכנת. אין חלקים ברי טיפול בתוך ההתקן.
- שינויים, שימוש בבקרות או ביצוע הליכים אחרים מאלה המתוארים כאן, עלולים לגרום לחשיפה לקרינה מסוכנת.



סכנה

מוצרי לייזר מסוימים מכילים דיודת לייזר מסוג Class 3A או Class 3B. שימו לב לאזהרה הבאה:

כאשר הוא פתוח, המוצר פולט קרינת לייזר. אל תביטו ישירות בקרן, אל תביטו ישירות בעזרת ציוד אופטי, והימנעו מחשיפה לקרן.





≥ 55 ק"ג (121.2 ליב')



≥ 32 ק"ג (70.5 ליב')

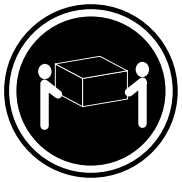

≥ 18 ק"ג (37 ליב')

זהירות:
השתמשו בהליכים
הנאותים בעת
הרמת הציוד.





זהירות:
לחצן ההפעלה של ההתקן ומתג ההפעלה של ספק החשמל אינם מפסיקים את זרם החשמל המסופק להתקן. בנוסף, ההתקן עשוי לכלול יותר מכבל חשמל אחד. כדי לסלק את כל הזרם החשמלי מההתקן, ודאו שכל כבלי החשמל מנותקים ממקור החשמל.

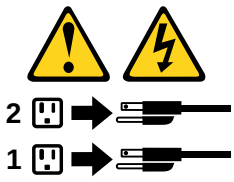



PERICOLO

La corrente elettrica proveniente dai cavi di alimentazione, del telefono e di comunicazione può essere pericolosa.

Per evitare il rischio di scosse elettriche:

- **Non collegare o scollegare qualsiasi cavo oppure effettuare l'installazione, la manutenzione o la riconfigurazione del prodotto durante un temporale.**
- **Collegare tutti i fili elettrici a una presa di alimentazione correttamente cablata e dotata di messa a terra.**
- **Collegare alle prese elettriche appropriate tutte le apparecchiature che verranno utilizzate per questo prodotto.**
- **Se possibile, utilizzare solo una mano per collegare o scollegare i cavi di segnale.**
- **Non accendere assolutamente apparecchiature in presenza di incendi, perdite d'acqua o danno strutturale.**
- **Scollegare i cavi di alimentazione, i sistemi di telecomunicazione, le reti e il modem prima di aprire i coperchi del dispositivo, salvo istruzioni contrarie relative alle procedure di installazione e configurazione.**
- **Collegare e scollegare i cavi come descritto nella seguente tabella quando vengono effettuate operazioni di installazione, spostamento o apertura dei coperchi di questo prodotto o delle unità collegate.**

Per collegarsi	Per scollegarsi
1. SPEGNERE le apparecchiature. 2. Innanzitutto, collegare tutti i cavi alle unità. 3. Collegare i cavi di segnale ai connettori. 4. Collegare i cavi di alimentazione alla presa. 5. Accendere l'unità.	1. SPEGNERE le apparecchiature. 2. Innanzitutto, rimuovere i cavi di alimentazione dalla presa. 3. Rimuovere i cavi di segnale dai connettori. 4. Rimuovere tutti i cavi dalle unità.



ATTENZIONE:

Quando si sostituisce la batteria al litio, utilizzare solo il Numero parte 45C1566 o un tipo di batteria equivalente consigliato dal produttore. Se sul sistema è presente un modulo che contiene una batteria al litio, sostituirlo solo con un tipo di modulo dello stesso tipo della stessa casa di produzione. La batteria contiene litio e può esplodere se usata, maneggiata o smaltita in modo non corretto.

Non:

- **Gettare o immergere la batteria nell'acqua**
- **Riscaldarla ad una temperatura superiore ai 100 gradi C (212 gradi F)**
- **Smontarla, ricaricarla o tentare di ripararla**

Le batterie usate vanno smaltite in accordo alla normativa in vigore (DPR 915/82 e successive disposizioni e disposizioni locali).



ATTENZIONE:

Quando vengono installati prodotti laser (quali CD-ROM, unità DVD-ROM, unità a fibre ottiche o trasmittenti), tener presente quanto segue:

- **Non rimuovere gli sportelli. L'apertura di un'unità laser può determinare l'esposizione a radiazioni laser pericolose. All'interno dell'unità non vi sono parti su cui effettuare l'assistenza tecnica.**
- **L'utilizzo di controlli, regolazioni o l'esecuzione di procedure non descritti nel presente manuale possono provocare l'esposizione a radiazioni pericolose.**



PERICOLO

Alcune unità laser contengono un diodo laser di Classe 3A o Classe 3B. Tener presente quanto segue:

Aprendo l'unità vengono emesse radiazioni laser. Non fissare il fascio, non guardarlo direttamente con strumenti ottici ed evitare l'esposizione al fascio.





≥18 kg ≥32 kg ≥55 kg

ATTENZIONE:

Prestare attenzione nel sollevare l'apparecchiatura.



ATTENZIONE:

Il pulsante di controllo dell'alimentazione presente sull'unità e l'interruttore dell'alimentatore non disattivano l'alimentazione corrente fornita all'unità. E' possibile che l'unità disponga di più cavi di alimentazione. Per disattivare l'alimentazione dall'unità, accertarsi che tutti i cavi di alimentazione siano scollegati dalla fonte di alimentazione.

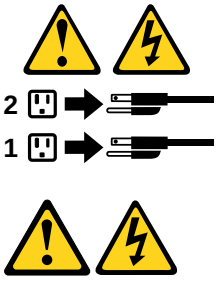

위험

전원, 전화, 통신 케이블의 전류는 위험합니다.

감전의 위험을 피하려면 다음과 같이 하십시오.

- 번개가 치는 날에는 케이블을 연결 또는 분리하거나 본 제품을 설치, 보수, 재구성하지 마십시오.

- 모든 전원 코드는 올바르게 접지된 전기 콘센트에 연결하십시오.

- 본 제품에 연결될 장치는 올바르게 배선된 콘센트에 연결하십시오.

- 신호 케이블을 연결 또는 분리할 때 가능하면 한 손만을 사용하십시오.

- 불 또는 물로 인한 손상이나 구조적인 손상이 있을 경우 장치의 전원을 절대 켜지 마십시오.

- 설치 및 구성 과정에 별도의 지시 사항이 없는 경우, 장치의 덮개를 열기 전에 연결된 전원 코드, 원격 통신 시스템, 네트워크, 모뎀을 분리하십시오.

- 본 제품이나 연결된 장치를 설치, 이동하거나 덮개를 열 때 다음 표와 같은 순서로 케이블을 연결하거나 분리하십시오.

연결할 때:	분리할 때:
1. 모든 장치의 전원을 끄십시오. 2. 먼저 모든 케이블을 장치에 연결하십시오. 3. 커넥터에 신호 케이블을 연결하십시오. 4. 콘센트에 전원 코드를 연결하십시오. 5. 장치의 전원을 켜십시오.	1. 모든 장치의 전원을 끄십시오. 2. 먼저 콘센트에서 전원 코드를 분리하십시오. 3. 커넥터에서 신호 케이블을 분리하십시오. 4. 장치에서 모든 케이블을 분리하십시오.



주의:
배터리를 교환할 때는 Part Number 45C1566 또는 제조업체에서 지정한 동일한 종류의 제품을 사용하십시오. 사용자의 시스템이 리튬 배터리를 포함하는 모듈일 경우, 동일한 제조업체에서 동일한 모듈 유형으로 생산된 제품으로 교체하십시오. 배터리에는 리튬이 함유되어 있어 잘못 사용, 취급 또는 폐기할 경우 폭발의 위험이 있습니다.

사고를 방지하려면 다음 사항을 준수하십시오.

- 배터리를 물 속에 던지거나 침수시키지 마십시오.

- 100℃(212°F) 이상 가열하지 마십시오.

- 수리하거나 분해하지 마십시오.

배터리를 폐기할 때는 법령 또는 회사의 안전 수칙에 따라 폐기하십시오.



주의:
CD-ROM, DVD-ROM 장치, 광섬유 장치 또는 송신 장치와 같은 레이저 제품을 설치할 때, 다음과 같은 취급 주의사항을 참고하십시오.

- 덮개를 열지 마십시오. 덮개를 열면 레이저 복사 에너지에 노출될 위험이 있습니다. 장치 내부에는 사용자가 조정하거나 수리할 수 있는 부품이 없습니다.

- 규정된 것 이외의 절차 수행, 제어 조정 등의 행위로 인해 해로운 레이저 복사에 노출될 수 있습니다.



위험

일부 장비에는 임베디드 클래스 3A 또는 클래스 3B 레이저 다이오드가 있습니다. 다음 주의사항에 유의하십시오.

드라이브가 열리면 레이저 복사 에너지가 방출됩니다. 광선이 눈에 직접 쏘이지 않도록 하십시오. 나안 또는 광학 기구를 착용한 상태에서 광선을 직접 바라보지 않도록 하십시오.





≥18 kg (37 lbs) ≥32 kg (70.5 lbs) ≥55 kg (121.2 lbs)

주의:
제품을 들어 올릴 때
안전 규제를 따르십시오.



주의:
장치의 전원 제어 버튼 및 전원 공급 장치의 전원 스위치를 사용하여 장치에 공급되는 전기를 차단하지 마십시오. 장치는 둘 이상의 코드를 가지고 있을 수 있습니다. 장치에서 모든 전원을 차단하려면 콘센트에서 코드가 모두 분리되어 있는지 확인하십시오.

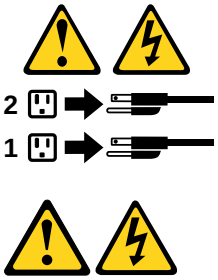

PELIGRO

La corriente eléctrica procedente de cables de alimentación, teléfonos y cables de comunicación puede ser peligrosa.

Para evitar el riesgo de descarga eléctrica:

- **No conecte ni desconecte los cables ni realice ninguna tarea de instalación, mantenimiento o reconfiguración de este producto durante una tormenta eléctrica.**
- **Conecte todos los cables de alimentación a tomas de corriente debidamente cableadas y conectadas a tierra.**
- **Cualquier equipo que se conecte a este producto también debe conectarse a tomas de corriente debidamente cableadas.**
- **Siempre que sea posible, utilice una sola mano para conectar o desconectar los cables de señal.**

- **No encienda nunca un equipo cuando hay señales de fuego, agua o daños estructurales.**
- **Desconecte los cables de alimentación, los sistemas de telecomunicaciones, las redes y los módems conectados antes de abrir las cubiertas de los dispositivos, a menos que se indique lo contrario en los procedimientos de instalación y configuración.**
- **Conecte y desconecte los cables, como se describe en la tabla siguiente, cuando instale, mueva o abra las cubiertas de este producto o de los dispositivos conectados.**

Para conectar	Para desconectar
1. APÁGUELO todo. 2. En primer lugar, conecte todos los cables a los dispositivos. 3. Conecte los cables de señal a los conectores. 4. Enchufe los cables de alimentación a las tomas de corriente. 5. Encienda el dispositivo.	1. APÁGUELO todo. 2. En primer lugar, desenchufe los cables de alimentación de las tomas de corriente. 3. Desconecte los cables de señal de los conectores. 4. Desconecte todos los cables de los dispositivos.



PRECAUCIÓN:

Cuando sustituya una batería de litio, utilice solamente una batería número de pieza 45C1566 u otra de tipo equivalente recomendada por el fabricante. Si su sistema dispone de un módulo que contiene una batería de litio, reemplácelo sólo con el mismo tipo de módulo, del mismo fabricante. La batería contiene litio y puede explotar si no se utiliza, manipula o desecha correctamente.

No debe:

- **Arrojarla al agua o sumergirla en ella**
- **Exponerla a temperaturas superiores a 100°C (212°F)**
- **Repararla o desmontarla**

Desháguese de la batería según especifiquen las leyes o normas locales.



PRECAUCIÓN:

Cuando haya productos láser (como unidades de CD-ROM, unidades de DVD, dispositivos de fibra óptica o transmisores) instalados, tenga en cuenta lo siguiente:

- **No quite las cubiertas. Si quita las cubiertas del producto láser, podría quedar expuesto a radiación láser peligrosa. Dentro del dispositivo no existe ninguna pieza que requiera servicio técnico.**
- **Si usa controles o ajustes o realiza procedimientos que no sean los especificados aquí, podría exponerse a radiaciones peligrosas.**



PELIGRO

Algunos productos láser tienen incorporado un diodo láser de clase 3A o clase 3B. Tenga en cuenta lo siguiente:

Cuando se abre, queda expuesto a radiación láser. No mire directamente al rayo láser, ni siquiera con instrumentos ópticos, y evite exponerse directamente al rayo láser.





≥18 kg ≥32 kg ≥55 kg

PRECAUCIÓN:

Adopte procedimientos seguros al levantar el equipo.



PRECAUCIÓN:

El botón de control de alimentación del dispositivo y el interruptor de alimentación de la fuente de alimentación no desconectan la corriente eléctrica suministrada al dispositivo. Además, el dispositivo podría tener más de un cable de alimentación. Para suprimir toda la corriente eléctrica del dispositivo, asegúrese de que todos los cables de alimentación estén desconectados de la toma de corriente.

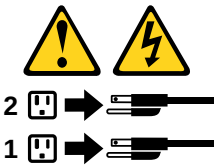

Chapter 2. Important service information

Strategy for replacing FRUs

Before replacing parts:

Ensure that all software fixes, drivers, and UEFI BIOS downloads are installed before you replace any FRUs listed in this manual.

After a system board is replaced, ensure that the latest UEFI BIOS is loaded to the system board before you complete the service action.

To download and install software fixes, drivers, and UEFI BIOS, go to https://pcsupport.lenovo.com and follow the instructions on the screen.

Use the following strategy to prevent unnecessary expense for replacing and servicing FRUs:

- If you are instructed to replace a FRU but the replacement does not correct the problem, reinstall the original FRU before you continue.
- Some computers have both a processor board and a system board. If you are instructed to replace either the processor board or the system board, and replacing one of them does not correct the problem, reinstall that board, and then replace the other one.
- If an adapter or a device consists of more than one FRU, any of the FRUs might be the cause of the error. Before replacing the adapter or device, remove the FRUs, one by one, to see if the symptoms change. Replace only the FRU that changed the symptoms.

Strategy for replacing a hard disk drive or a solid-state drive

Always try to run a low-level format operation before replacing a hard disk drive or a solid-state drive. This will cause all customer data on the drive to be lost. Ensure that the customer has a current backup of the data before you perform this task.

Attention: The drive startup sequence in the computer you are servicing might have been changed. Be extremely careful during write operations such as copying, saving, or formatting. If you select an incorrect drive, data or programs can be overwritten.

Important notice for replacing a system board

Some components mounted on a system board are very sensitive. Improper handling of a system board can cause damage to those components, and may cause a system malfunction.

After replacing the system board, use the Golden Key U1 tool to bind the model type, serial number, and Brand ID of the computer with the new system board. Refer to https://support.lenovo.com/us/en/solutions/ht507251 for instructions.

Attention: When handling a system board:

- Do not drop a system board or apply any excessive force to it.
- Avoid rough handling of any kind.
- Avoid bending a system board and hard pushing to prevent cracking at each Ball Grid Array (BGA) chipset.

© Copyright Lenovo 2020

How to use error codes

Use the error codes displayed on the screen to diagnose failures. If more than one error code is displayed, begin the diagnosis with the first error code. Whatever causes the first error code might also cause false error codes. If no error code is displayed, see whether the error symptom is listed in the “Symptom-to-FRU Index” section.

Strategy for replacing FRUs for CTO, special-bid, and standard models

This topic provides information about the model types and FRU identification.

Product definition

This topic introduces different model types and how to identify each type.

Dynamic Configure To Order (CTO) model

This model provides the ability for a customer to configure a Lenovo solution from a Web site, and have this configuration sent to fulfillment, where it is built and shipped directly to the customer. The machine label and eSupport will load these products as the 4-character MT, 4-character model, and 2-character country code. The model is “CTO1” and the default country code is “WW” (example: 20AACTO1WW).

Special-bid model

This model is a unique configuration that has been negotiated between Lenovo and the customer. A unique MTM consists of a 4-character MT, a 4-character model, and a numeric 2-character country code is provided to the customer to place orders (example: 20AA000955). The country code assigned is numeric and does not designate a specific country or region. The custom model factsheet for the MTM indicates which country the special-bid MTM is set up for. Special-bid offering is not generally announced.

Standard model

Standard models (fixed configuration) are announced and offered to all customers. The MTM portion of the machine label consists of a 4-character MT, a 4-character model, and an alphabetic 2-character country code. The country code assigned is alphabetic and represents a designated country or region (example: 20AA0009UK).

FRU identification

To identify FRUs for a product, do the following:

1. Go to: https://support.lenovo.com/partslookup
2. Type the Machine Type in the corresponding field to get a general FRU list, or type the Serial Number for more detailed FRU information.

Chapter 3. Product overview

Top

Fan models



Fanless models

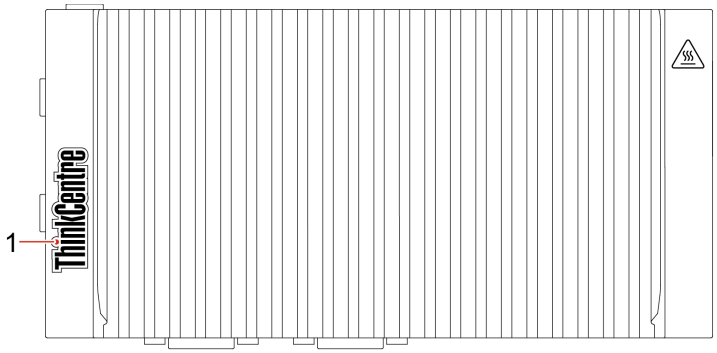

1. ThinkCentre® LED	This indicator is on when the computer is on.

© Copyright Lenovo 2020

Front

Fan models

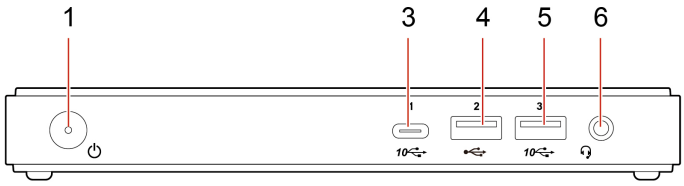

Fanless models

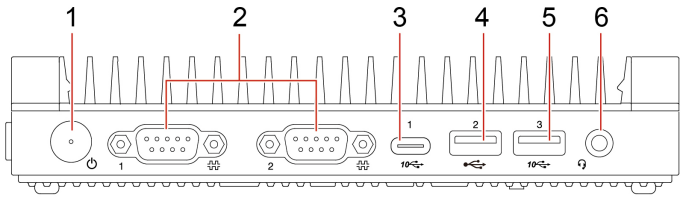

1. Power button	Press to turn on the computer. To turn off the computer, open the Start menu, click **Power**, and then select **Shut down**. The indicator in the power button shows the system status of your computer. • **On:** The computer is on. • **Off:** The computer is off or in hibernation mode. • **Blinking:** The computer is in sleep mode. • **Breathing:** The computer is in modern standby mode.
2. Serial connectors (2)	Used to connect an external modem, a serial printer, or other devices that use a serial connector.
3. USB-C™ (3.2 Gen 2) connector	• The output voltage and current are 5 V and 0.9 A. • Transfer data at USB 3.2 speed, up to 10 Gbps. • Connect to USB-C accessories to help expand your computer functionality. To purchase USB-C accessories, go to https://www.lenovo.com/accessories.
4. USB 2.0 connector	Connect USB-compatible devices, such as a USB keyboard, USB mouse, USB storage device, or USB printer.
5. USB 3.2 connector Gen 2	Connect USB-compatible devices, such as a USB keyboard, USB mouse, USB storage device, or USB printer.
6. Headset connector	Connect a headset or headphones to your computer.

Rear

Fan models

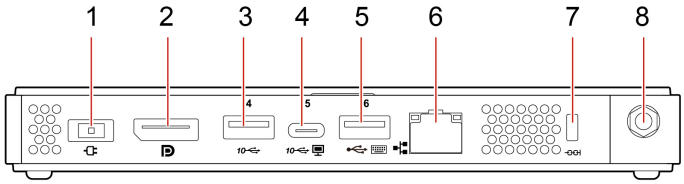

Fanless models

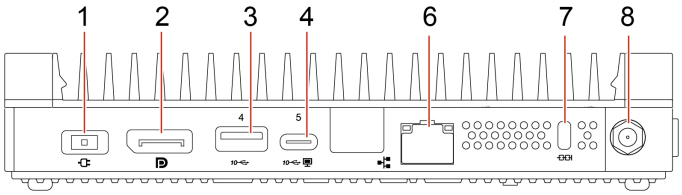

1. Power adapter connector	Connect the power adapter to your computer for power supply.
2. DisplayPort® out connector	Send audio and video signals from the computer to another audio or video device, such as a high-performance monitor.
3. USB 3.2 connector Gen 2	Connect USB-compatible devices, such as a USB keyboard, USB mouse, USB storage device, or USB printer.
4. USB-C™ (3.2 Gen 2) connector	• The output voltage and current are 5 V and 0.9 A. • Transfer data at USB 3.2 speed, up to 10 Gbps. • Connect to an external display: – USB-C to VGA: 1900 x 1200 pixels, 60 Hz – USB-C to DP: 3840 x 2160 pixels, 60 Hz • Connect to USB-C accessories to help expand your computer functionality. To purchase USB-C accessories, go to https://www.lenovo.com/accessories.
5. USB 2.0 connector	Connect USB-compatible devices, such as a USB keyboard, USB mouse, USB storage device, or USB printer. This connector supports the smart power-on feature.
6. Ethernet connector	Connect to a local area network (LAN). When the green indicator is on, the computer is connected to a LAN. When the yellow indicator blinks, data is being transmitted.
7. Security-lock slot	Lock your computer to a desk, table, or other fixtures through a Kensington-style cable lock.
8. Wi-Fi® antenna slot*	Used to install the rear Wi-Fi antenna cable connector that is available only on some models. The rear Wi-Fi antenna is installed on the rear Wi-Fi antenna cable connector.

* for selected models

Bottom

Fan models

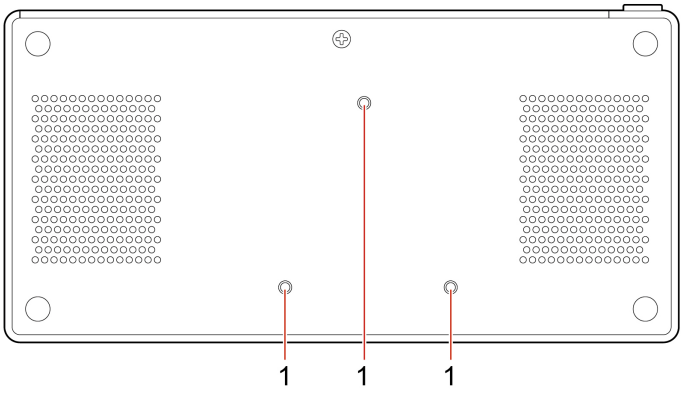

Fanless models

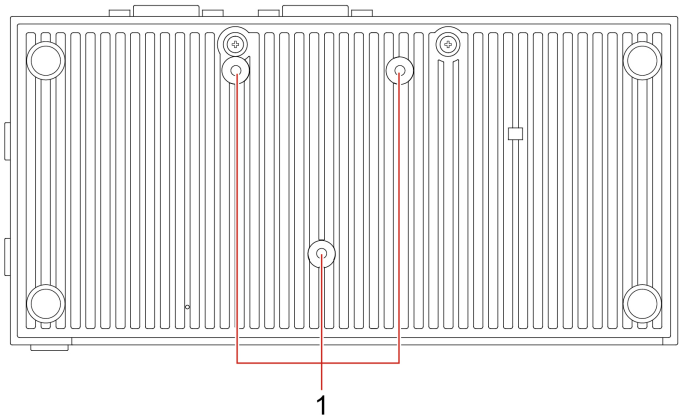

1. VESA® threaded holes	Connect the matched DIN rail bracket, power adapter bracket, or VESA mount bracket with the matched screws (M3 x 4 mm x 3 pcs) when you install the computer on a wall.

Chapter 4. Service checkout and symptom-to-FRU index

This chapter provides information about general service checkout and symptom-to-FRU index.

Service checkout

Attention: The drives in the computer you are servicing might have been rearranged or the drive startup sequence changed. Be extremely careful during write operations such as copying, saving, or formatting. Data or programs can be overwritten if you select an incorrect drive.

General error messages appear if a problem or conflict is found by a program, the operating system, or both. For an explanation of these messages, refer to the information supplied with that software package.

Use the following procedure to help determine the cause of the problem:

1. Turn off the computer and all external devices.
2. Check all cables and power cords.
3. Set all display controls to the middle position.
4. Turn on all external devices.
5. Turn on the computer.
   - Look for displayed error codes.
   - Listen for beep codes.
   - Look for readable instructions or a main menu on the display.

   If you *did not* receive the correct response, proceed to step 6 on page 33.

   If you *do* receive the correct response, proceed to step 7 on page 33.
6. Look at the following conditions and follow the instructions:
   - If you hear beep codes during POST, go to “Beep symptoms” on page 35.
   - If the computer displays a POST error, go to “POST error codes” on page 36.
   - If the computer hangs and no error is displayed, continue at step 7 on page 33.
7. Run the Diagnostic programs. See “Diagnostics” on page 49.
   - If you receive an error, replace the part that the diagnostic program calls out.
   - If the test stops and you cannot continue, replace the last device tested.

Problem determination tips

Due to the variety of hardware and software combinations that can be encountered, use the following information to assist you in problem determination. If possible, have this information available when requesting assistance from Service Support and Engineering functions.

- Machine type and model
- Processor or hard disk drive upgrades
- Failure symptom
  - Do diagnostics indicate a failure?
  - What, when, where, single, or multiple systems?
  - Is the failure repeatable?
  - Has this configuration ever worked?

© Copyright Lenovo 2020

  - If it has been working, what changes were made prior to its failing?
  - Is this the original reported failure?
- Diagnostics version
  - Type and version level
- Hardware configuration
  - Print (print screen) configuration currently in use
  - BIOS level
- Operating system software
  - Type and version level

Notes: To eliminate confusion, identical systems are considered identical only if they:

1. Are the exact machine type and models
2. Have the same BIOS level
3. Have the same adapters/attachments in the same locations
4. Have the same address jumpers/terminators/cabling
5. Have the same software versions and levels
6. Have the same Diagnostic Diskettes (version)
7. Have the same configuration options set in the system
8. Have the same setup for the operating system control files

Comparing the configuration and software set-up between “working and non-working” systems will often lead to problem resolution.

Symptom-to-FRU index

The Symptom-to-FRU index lists error symptoms and possible causes. The most likely cause is listed first. Always begin with “Service checkout” on page 33. This index can also be used to help you decide which FRUs to have available when servicing a computer. If you are unable to correct the problem using this index, go to “Undetermined problems” on page 39.

Notes:

- The Symptom-to-FRU index is not specific to any machine type and are applicable to all ThinkCentre computers.
- If you have both an error message and an incorrect audio response, diagnose the error message first.
- If you cannot run the diagnostic tests or you get a diagnostic error code when running a test, but did receive a POST error message, diagnose the POST error message first.
- If you did not receive any error message, look for a description of your error symptoms in the first part of this index.

Hard disk drive boot error

A hard disk drive boot error can have the following causes.

Error	FRU/Action
The start-up drive is not in the boot sequence in configuration.	Check the configuration and ensure that the start-up drive is in the boot sequence.
No operating system installed on the boot drive.	Install an operating system on the boot drive.

Error	FRU/Action
The boot sector on the startup drive is corrupted.	The drive must be formatted. Do the following: 1. Attempt to back up the data on the failing hard disk drive. 2. Using the operating system programs, format the hard disk drive.
The drive is defective.	Replace the hard disk drive.

Power supply problems

If you suspect a power problem, use the following procedures.

Check/Verify	FRU/Action
Check the following for proper installation. • Power cord • On/Off switch connector • On/Off switch power supply connector • System board power supply connectors • Microprocessor connection	Reseat connectors
Check the power cord for continuity.	Power cord
Check the power-on switch for continuity.	Power-on switch

Beep symptoms

Beep symptoms are tones or a series of tones separated by pauses (intervals without sound) during POST.

The following table describes the beep symptoms.

Beep symptom	FRU/Action
2 short beeps: common POST error	Common POST error code. See the detailed failure information in “POST error codes” on page 36.
3 short and 1 long beeps: DRAM memory error	Perform the following actions in order: 1. Make sure that the memory modules are properly seated in the memory slots. 2. Replace the memory modules. 3. Replace the system board (for trained service personnel only).
4 long beeps: insufficient shadow RAM resources for option ROM (error code: 8998) or PCIe/PCI MMIO (memory mapped input/output) resources (error code: 8999)	See the detailed failure information in “POST error codes” on page 36.
2 long and 3 short beeps: graphics card error	Perform the following actions in order: 1. Make sure that the graphics cards are properly seated in the slots. 2. Replace the graphics cards. 3. Replace the system board (for trained service personnel only).

POST error codes

Each time you turn on the system, it performs a series of tests that check the operation of the system and some options. This series of tests are called the *Power-On Self-Test*, or *POST*. POST checks the following operations:

- Some basic system-board operations
- Memory operation
- Video operation
- Whether the boot drive is working

If the POST detects a problem, an error message appears on the screen. A single problem might cause several error messages to appear. When you correct the cause of the first error message, the other error messages probably will not appear on the screen the next time.

Error code	POST error message	Description/Action
0135	CPU fan failure System fan failure Power fan failure Front fan failure Rear fan failure Auxiliary fan failure ODD fan failure	This error message is displayed when a fan fails and the system might be overheating. Press F10 to exit.
0162	Setup data integrity check failure	This error indicates the checksum of BIOS Setup data in NVRAM is bad. In BIOS Setup, the “Save Changes and Exit” operation is needed in order to clear this error.
0164	Memory configuration change has occurred	This error message is displayed when the memory size is changed. Press F10 to exit.
1762	Storage device configuration change has occurred	This error message is displayed when a hard disk drive change or an optical drive change has been made. Press F10 to exit.

8998	Not enough shadow RAM resources for OPTION ROM, not all devices initialized. Suggest to remove some add-on cards, or change to UEFI mode in BIOS setup.	This error message is displayed when the shadow RAM resources for option ROM are insufficient. If the legacy option ROM is insufficient, remove some add-in cards. For the system that supports UEFI, set UEFI as the first priority.
8999	Not enough PCIe/PCI MMIO resources. Currently only one video card is enabled. Remove some PCIe cards.	This error message is displayed when the PCIe/PCI MMIO (memory mapped input/output) resources are insufficient. Remove some add-in cards.

Miscellaneous error conditions

Message/Symptom	**FRU/Action**
Changing display colors	**Display/Monitor**
Computer will *not* power-off. See “Hard disk drive boot error” on page 34.	1. Power Switch 2. System Board 3. Riser card, if installed.
Computer will *not* RPL from server	1. Ensure that the network is in startup sequence as the first device or the first device after diskette. 2. Ensure that the network adapter is enabled for RPL. 3. Network adapter (Advise network administrator of new MAC address)
Computer will *not* perform a Wake On LAN® (if applicable)	1. Check the power supply and signal cable connections to the network adapter. 2. Ensure that the operating system settings are set to enable Wake on LAN. 3. Ensure that the Wake On LAN feature is enabled in Setup/Configuration. 4. Ensure that the network administrator is using the correct MAC address. 5. Ensure no interrupt or I/O address conflicts. 6. Network adapter (advise network administrator of new MAC address)
Dead computer. See “Hard disk drive boot error” on page 34.	1. Power Supply 2. System Board
Diskette drive in-use light remains on or does not light when drive is active.	1. Diskette Drive 2. System Board 3. Diskette Drive Cable
Blank screen except for flashing cursor.	1. System Board 2. Primary Hard Disk Drive 3. Hard Disk Drive Cable

Message/Symptom	FRU/Action
Incorrect memory size during POST	1. Run the Memory tests. 2. Memory Module 3. System Board
"Insert a Diskette" icon appears with a known-good diagnostics diskette in the first 3.5-inch diskette drive.	1. System Board 2. Diskette Drive Cable 3. Network Adapter
Intensity or color varies from left to right of characters and color bars	1. Display 2. Video adapter (if present) 3. System Board
No power or fan not running	1. See “Hard disk drive boot error” on page 34.
Non-system disk or disk error-type message with a known-good diagnostic diskette.	1. Diskette Drive 2. System Board 3. Diskette Drive Cable
Other display symptoms not listed above (including blank or illegible display)	1. Display 2. System Board
Power-on indicator or hard disk drive in-use light not on, but computer works correctly	1. Power switch/LED assembly 2. System Board
Printer problems	1. Printer 2. System Board
Program loads from the hard disk with a known-good diagnostics diskette in the first 3.5-inch diskette drive	1. Run the Setup Utility program and check the Startup sequence. 2. Diskette Drive 3. Diskette Drive Cable 4. System Board 5. Power Supply
RPL computer cannot access programs from its own hard disk.	1. If the network administrator is using LCCM Hybrid RPL, check the startup sequence: a. **First device - network** b. **Second device - hard disk** 2. Hard disk drive
RPL computer does not RPL from server	1. Check the startup sequence. 2. Check the network adapter LED status.
Serial or parallel connector device failure (system board connector)	1. External Device Self-Test OK? 2. External Device 3. Cable 4. System Board

Message/Symptom	FRU/Action
Serial or parallel connector device failure (adapter connector)	1. External Device Self-Test OK? 2. External Device 3. Cable 4. Alternate Adapter 5. System Board
Some or all keys on the keyboard do not work	1. Keyboard 2. Keyboard Cable 3. System Board

Undetermined problems

This section provides instructions on how to find out the failing devices or adapters.

1. Turn off the computer.
2. Remove or disconnect the following components (if installed) one at a time.
   a. External devices (modem, printer, or mouse)
   b. Any adapters
   c. Memory modules
   d. Extended video memory
   e. External Cache
   f. External Cache RAM
   g. Hard disk drive
   h. Diskette drive
3. Turn on the computer to retest the system.
4. Repeat steps 1 through 3 until you find the failing device or adapter.

If all devices and adapters have been removed, and the problem continues, do one of the following to replace the system board.

- For fan models, see “System board” on page 79.
- For fanless models, see “System board and coin-cell battery” on page 101

Chapter 5. Troubleshooting, diagnostics, and recovery

This chapter provides solutions to resolve computer problems. Use the basic procedure as a starting point for resolving computer problems.

Basic procedure for resolving computer problems

Prerequisite

Before you start, read Chapter 1 “Important safety information” on page 1 and print the following instructions.

1. Check that:
   a. The cables for all connected devices are connected correctly and securely.
   b. All components have been reassembled correctly.
   c. All connected devices that require ac power are connected to properly grounded and working electrical outlets.
   d. All connected devices are enabled in UEFI BIOS.
2. Use an antivirus program to see if the computer has been infected by a virus. If the program detects a virus, remove the virus.
3. Go to “Troubleshooting” on page 41 and follow the instructions for the type of problem you are experiencing.
4. Run the diagnostic program. See “Diagnostics” on page 49.
5. Recover your operating system. See “Recovery” on page 50.
6. If the problem persists, contact Lenovo.

Troubleshooting

Use the troubleshooting information to find solutions to problems that have definite symptoms.

© Copyright Lenovo 2020

Startup problems

Problem	Solution
The computer does not start up when you press the power button.	• Ensure that the power cord is correctly connected to the rear of the computer and to a working electrical outlet. • If the computer has a secondary power switch on the rear of the computer, ensure that it is switched on. • The power indicator on the front of the computer is on. • The computer voltage matches the voltage available at the electrical outlet for your country or region.
The operating system does not start up from the correct storage drive or fails to start up	• Ensure that all storage drive signal cables and power cables are connected correctly. • Ensure that the storage drive the computer starts up from is listed as the first startup device in UEFI BIOS. • In rare cases, the storage drive with the operating system might get corrupted or damaged. In such cases, you might need to replace the storage drive. • If the computer is installed with an Optane memory: – Ensure that the Optane memory is not removed. – Ensure that the Optane memory is not damaged. Check the Optane memory using diagnostic tools.
The computer beeps multiple times before the operating system starts up.	Ensure that no keys are stuck.

Audio problems

Problem	Solution
The audio cannot be heard on the Windows® operating system.	• If you are using powered external speakers that have an On/Off control, ensure that: – The On/Off control is set to the **On** position. – The speaker power cable is connected to a properly grounded, functional ac electrical outlet. • If your external speakers have a volume control, ensure that the volume is not set too low. • Click the volume icon in the Windows notification area on the taskbar. Check the speaker and volume settings. Do not mute the speaker or set the volume at a very low level. • If your computer has a front audio panel, ensure that the volume is not set too low. • Ensure that your external speakers (and headphones, if used) are connected to the correct audio connector on the computer. Most speaker cables are color-coded to match the audio connector. **Note:** When external-speaker or headphone cables are connected to the audio connector, the internal speaker, if present, is disabled. In most cases, if an audio adapter is installed in one of the expansion slots, the audio function built into the system board is disabled. Therefore, you must use the audio connectors on the audio adapter. • Ensure that the program you are running is designed for use in the Microsoft Windows operating system. If the program is designed to run in DOS, the program does not use the Windows sound feature. The program must be configured to use SoundBlaster Pro or SoundBlaster emulation. • Ensure that the audio device drivers are correctly installed.
The sound does not come from the headset or headphones.	Select the headset or headphones as the default audio output device in advanced sound settings.
The sound comes from one of the external speakers.	• Ensure that the speaker cable is inserted completely into the connector on the computer. • Ensure that the cable that connects the left speaker to the right speaker is securely connected. • Ensure that the balance settings are set correctly. 1. Right-click the volume icon in the Windows notification area on the taskbar. Then, click **Open Volume Mixer** and select the desired speaker. 2. Click the speaker icon on top of the volume control, and then click the **Levels** tab.

Network problems

Note: The Wi-Fi® and Bluetooth features are optional.

Problem	Solution
The computer cannot connect to an Ethernet LAN.	• Connect the cable from the Ethernet connector to the RJ45 connector of the hub. • Enable the Ethernet LAN feature in UEFI BIOS. • Enable the Ethernet LAN adapter. 1. Go to **Control Panel** and view by large icons or small icons. 2. Click **Network and Sharing Center** → **Change adapter settings**. 3. Right-click the Ethernet LAN adapter icon and click **Enable**. • Update or reinstall the Ethernet LAN driver. • Install all networking software that is necessary for your network environment. Check with your LAN administrator for the necessary networking software. • Set the same duplex for the switch port and the adapter. If you configured the adapter for full duplex, ensure that the switch port is also configured for full duplex. Setting a wrong duplex mode might degrade performance, cause data loss, or result in lost connections.
When a Gigabit Ethernet model computer is used at a speed of 1000 Mbps, the Ethernet LAN connection fails or errors occur.	Connect the network cable to the Ethernet connector using Category 5 wiring and a 100 BASE-T hub/switch (not 100 BASE-X).
The Wake On LAN (WOL) feature does not work.	Enable the Wake On LAN feature in UEFI BIOS.
The Wi-Fi feature does not work.	• Enable the Wi-Fi feature in UEFI BIOS. • Enable all Wi-Fi devices. 1. Right-click the **Start** button to open the **Start** context menu. 2. Click **Device Manager**. Type the administrator password or provide confirmation, if prompted. 3. Expand **Network adapters** to display all network devices. 4. Right-click each Wi-Fi device, and then click **Enable device**. • Enable the Wi-Fi feature in Windows Settings. 1. Open the **Start** menu. 2. Click **Settings** → **Network & Internet** → **Wi-Fi**. 3. Enable the Wi-Fi feature. • Update or reinstall the Wi-Fi driver.

Problem	Solution
The Bluetooth feature does not work.	• Enable the Bluetooth feature in UEFI BIOS. • Enable all Bluetooth devices. 1. Right-click the **Start** button to open the **Start** context menu. 2. Click **Device Manager**. Type the administrator password or provide confirmation if prompted. 3. Expand **Bluetooth** to display all Bluetooth devices. Right-click each Bluetooth device, and then click **Enable device**. 4. Expand **Network adapters** to display all network devices. Right-click each Bluetooth device, and then click **Enable device**. • Turn on the Bluetooth radio. 1. Open the **Start** menu. 2. Click **Settings → Devices → Bluetooth & other devices**. 3. Turn on the **Bluetooth** switch to enable the Bluetooth feature. • Update or reinstall the Bluetooth driver.
Sound does not come from the Bluetooth headset or headphones.	Select the Bluetooth headset or headphones as the default audio output device in advanced sound settings.

Performance problems

Problem	Solution
Excessive fragmented files exist on the storage drives.	**Note:** Depending on the volume of the storage drives and amount of data stored on the storage drives, the disk-defragmentation process might take up to several hours. 1. Close any open programs and windows. 2. Open the **Start** menu. 3. Click **Windows System** → **File Explorer** → **This PC**. 4. Right-click your C drive and then click **Properties**. 5. Click the **Tools** tab. 6. Click **Optimize**. Select the drive as desired, and then click **Optimize**. 7. Follow the on-screen instructions.
The free storage drive space is insufficient.	• Clean out your Inbox, Sent Items, and Deleted Items folders from your e-mail application. • Clean up your C drive. 1. Open the **Start** menu. 2. Click **Windows System** → **File Explorer** → **This PC**. 3. Right-click your C drive and then click **Properties**. 4. Check the amount of free space, and then click **Disk Cleanup**. 5. A list of unnecessary file categories is displayed. Select the category you want to delete, and then click **OK**. • Disable some Windows features or remove some unnecessary programs. 1. Go to **Control Panel** and view by large icons or small icons. 2. Click **Programs and Features**. 3. Do one of the following: – To disable some Windows features, click **Turn Windows features on or off**. Follow the on-screen instructions. – To remove some unnecessary programs, select the program you want to remove, and then click **Uninstall/ Change** or **Uninstall**.
The free memory space is insufficient.	• Right-click a blank area on the taskbar and open Task Manager. Then, end some tasks you are not performing. • Install additional memory modules.

Storage drive problems

Problem	Solution
Some or all storage drives are missing from the BIOS menu.	• Ensure that the signal cables and power cables for all the storage drives are connected correctly. • Ensure that the computer is configured correctly to support the storage drives. – If the computer is installed with SATA storage drives, ensure that the SATA storage drive enablement module (one to five storage drives) is installed. – If the computer is installed with SAS storage drives, ensure that the SAS storage drive enablement module (one to five storage drives) or the LSI MegaRAID SAS adapter is installed.

CD or DVD problems

Problem	Solution
A CD or DVD does not work.	• Ensure that the optical drive supports the CD or DVD. • Ensure that the disc is inserted correctly, with its label up. • Ensure that the disc you are using is clean. To remove dust or fingerprints, wipe the disc clean with a soft cloth from the center to the outside. Wiping a disc in a circular motion might cause loss of data. • Ensure that the power cable and signal cable are securely connected to the drive. • Ensure that the disc you are using is not scratched or damaged. Try inserting another disc that you know works. • If you have multiple CD or DVD drives installed (or a combination of CD and DVD drives), try inserting the disc into the other drive. In some cases, only one of the drives is connected to the audio subsystem.
A bootable recovery medium, such as the Product Recovery CD, cannot be used to start your computer.	Ensure that the CD or DVD drive is set as the top priority of the boot priority order in UEFI BIOS. **Note:** On some computer models, the startup sequence is permanently set and cannot be changed.
A black screen is displayed instead of the DVD video.	• Restart the DVD player program. • Try a lower screen resolution or color depth. • Close any open files, and then restart the computer.
A DVD movie does not play.	• Ensure that the disc surface is clean and not scratched. • Check the disc or packaging for regional coding. You might need to purchase a disc with coding for the region where you are using the computer.
No audio or only an intermittent audio comes out while a DVD movie is playing.	• Check the volume control settings on the computer and on your speakers. • Ensure that the disc surface is clean and not scratched. • Check all cable connections to and from the speakers. • Use the DVD menu for the video to select a different audio track.

Problem	Solution
The playback is slow or choppy.	• Disable any background programs, such as AntiVirus or Desktop Themes. • Ensure that video resolution is less than 1152 x 864 pixels.
A message indicating invalid disc or no disc found is displayed.	• Ensure that the disc is in the drive with the shiny side of the disc facing down. • Ensure that video resolution is less than 1152 x 864 pixels. • Ensure that the DVD or CD is inserted into an appropriate optical drive. For example, do not insert a DVD into a CD-only drive.

Serial connector problems

Problem	Solution
The serial connector cannot be accessed.	• Connect the serial cable from the serial connector on the computer to the serial device. If the serial device has its own power cord, connect the power cord to a grounded electrical outlet. • Turn on the serial device and keep the device online. • Install any programs supplied with the serial device. Refer to the documentation that comes with the serial device for more information. • If you added one serial-connector adapter, ensure that the adapter is installed correctly.

USB device problems

Problem	Solution
A USB device cannot be accessed.	• Connect the USB cable from the USB connector to the USB device. If the USB device has its own power cord, connect the power cord to a grounded electrical outlet. • Turn on the USB device and keep the device online. • Install any device drivers or programs supplied with the USB device. Refer to the documentation that comes with the USB device for more information. • Disconnect and reconnect the USB connector to reset the USB device. • Ensure that the Smart USB Protection function is disabled in UEFI BIOS.

Software problems

Problem	Solution
Some programs do not work as expected.	1. Check whether the problem is caused by a program. a. Ensure that the software is compatible with the computer. Refer to the information supplied with the software for more information. b. Verify that other software works correctly on the computer. c. Verify that the software you are using works on another computer. 2. If the problem is caused by a program: • Refer to the printed documentation that comes with the program or the help system of the program. • Update the program. • Uninstall the program and then reinstall it. To download a program that is preinstalled on your computer, go to https://pcsupport.lenovo.com and follow the on-screen instructions.

Diagnostics

Use diagnostic solutions to test hardware components and report operating-system-controlled settings that interfere with the correct operation of your computer.

Lenovo diagnostic tools

For information about Lenovo diagnostic tools, go to:
https://pcsupport.lenovo.com/lenovodiagnosticsolutions

UEFI diagnostic program

A UEFI diagnostic program is preinstalled on the computer. It enables you to test memory modules and internal storage devices, view system information, and check and recover bad sectors on internal storage devices.

To run the UEFI diagnostic program, do the following:

1. Turn on the computer. If the computer cannot be turned on, go to “Basic procedure for resolving computer problems” on page 41. If an error code is displayed, go to “Symptom-to-FRU index” on page 34 for error code descriptions and troubleshooting hints.
2. Repeatedly press and release the F10 key when turning on the computer. The main screen of the UEFI diagnostic program is displayed.
3. Follow the instructions on the screen to use the diagnostic program.

The options on the main screen are as follows:

Table 1. Options on the main screen of the UEFI diagnostic program

DIAGNOSTICS	TOOLS
• **CPU [U]** • **DISPLAY [D]** • **KEYBOARD [K]** • **MEMORY [E]** • **MOTHERBOARD [H]** • **MOUSE [W]** • **PCI EXPRESS [P]** • **STORAGE [S]** • **RUN ALL [R]**	• **SYSTEM INFORMATION [F1]** • **BAD BLOCK RECOVERY [F3]** • **SMART INFORMATION [F5]**

Note: The options on the main screen might vary, depending on the hardware configuration and the UEFI diagnostic program version preinstalled on the computer.

Recovery

This section introduces the recovery information of the Windows 10 operating system. Ensure that you read and follow the on-screen recovery instructions. The data on your computer might be deleted during the recovery process. To avoid data loss, make a backup copy of all the data that you want to keep.

Restore system files and settings to an earlier point

1. Go to **Control Panel** and view by large icons or small icons.
2. Click **Recovery → Open System Restore**. Then, follow the on-screen instructions.

Restore your files from a backup

Note: If you use the File History tool to restore your files from a backup, ensure that you backed up your data earlier with the tool.

1. Go to **Control Panel** and view by large icons or small icons.
2. Click **File History → Restore personal files**. Then, follow the on-screen instructions.

Reset your computer

In the resetting process, you can choose to keep your files or remove them when you reinstall the operating system.

Note: The items in the graphical user interface (GUI) might change without notice.

1. Open the **Start** menu, and then click **Settings → Update & Security → Recovery**.
2. In the **Reset this PC** section, click **Get started**.
3. Follow the on-screen instructions to reset your computer.

Use advanced options

1. Open the **Start** menu, and then click **Settings → Update & security → Recovery**.
2. In the **Advanced startup** section, click **Restart now → Troubleshoot → Advanced options**.
3. Select a preferred option, and then follow the on-screen instructions.

Windows automatic recovery

Note: Ensure that your computer is connected to ac power during the recovery process.

The Windows recovery environment on your computer operates independently from the Windows 10 operating system. It enables you to recover or repair the operating system even if the Windows 10 operating system fails to start.

After two consecutive failed boot attempts, the Windows recovery environment starts automatically. Then, you can choose repair and recovery options by following the on-screen instructions.

Create and use a recovery USB device

It is recommended that you create a recovery USB drive as early as possible as a backup for the Windows recovery programs. With the recovery USB drive, you can troubleshoot and fix the problems even if the preinstalled Windows recovery programs are damaged. If you did not create a recovery USB drive as a precautionary measure, you can contact Lenovo Customer Support Center and purchase one from Lenovo. For a list of the Lenovo Support phone numbers for your country or region, go to: https://pcsupport.lenovo.com/supportphonelist

Create a recovery USB drive

Attention: The creation process deletes anything stored on the USB drive. To avoid data loss, make a backup copy of all the data that you want to keep.

1. Ensure that your computer is connected to ac power.
2. Prepare a USB drive with capacity of at least 16 GB. The actual USB capacity required depends on the size of the recovery image.
3. Connect the prepared USB drive to the computer.
4. Type `recovery` in the search box. Then, click **Create a recovery drive**.
5. Click **Yes** in the User Account Control window to allow the Recovery Media Creator program to start.
6. In the Recovery Drive window, follow the on-screen instructions to create a recovery USB drive.

Use the recovery USB drive

If your computer cannot be started, go to https://pcsupport.lenovo.com/supportphonelist first to try to solve the problem by yourself. If the problem persists, use the recovery USB drive to recover your computer.

1. Ensure that your computer is connected to ac power.
2. Connect the recovery USB drive to the computer.
3. Turn on or restart the computer. When the logo screen is displayed, press F12. The Boot Menu window opens.
4. Select the recovery USB drive as the boot device. Then, follow the on-screen instructions to complete the process.

Update the device driver

Attention: Reinstalling device drivers will change the current configuration of the computer.

You should download the latest driver for a component when you notice poor performance from that component or when you added a component. This action might eliminate the driver as the potential cause of a problem. Download and install the latest driver by one of the following methods:

- From the Vantage app:

Open the Vantage app to check the available update packages. If the latest UEFI BIOS update package is available, follow the on-screen instructions to download and install the package.

- From the Lenovo Support Web site:

  Go to https://pcsupport.lenovo.com and select the entry for your computer. Then, follow the on-screen instructions to download and install necessary drivers and software.

- From Windows Update:

  Note: The device drivers provided by Windows Update might not be tested by Lenovo. It is recommended that you get device drivers from Lenovo.

  1. Open the **Start** menu.
  2. Click **Settings → Update & Security → Windows Update**.
  3. Follow the on-screen instructions.

Chapter 6. Hardware removal and installation

This chapter provides instructions on how to remove and install hardware for your computer.

Handling static-sensitive devices

Do not open the static-protective package containing the new part until the defective part has been removed and you are ready to install the new part. Static electricity, although harmless to you, can seriously damage computer components and options.

When you handle options and other computer components, take these precautions to avoid static-electricity damage:

- Limit your movement. Movement can cause static electricity to build up around you.
- Always handle options and other computer components carefully. Handle PCI/PCIe cards, memory modules, system boards, and microprocessors by the edges. Never touch any exposed circuitry.
- Prevent others from touching the options and other computer components.
- Touch the static-protective package containing the part to a metal expansion-slot cover or other unpainted metal surface on the computer for at least two seconds. This reduces static electricity from the package and your body before you install or replace a new part.
- When possible, remove the new part from the static-protective package, and install it directly in the computer without setting the part down. When this is not possible, place the static-protective package on a smooth, level surface and place the part on the package.
- Do not place the part on the computer cover or other metal surface.

Service tool kit

Ensure that the following common service tool kit is prepared before you service the computer.

No.	Tool name	Tool type
1	Phillips-head screwdriver	Common tool
2	Torx-head screwdriver (for new Intel Xeon CPUs)	Common tool
3	Pry tools	Common tool
4	Conductive tweezers	Common tool
5	Isolated tweezers	Common tool
6	Hexagonal socket	Common tool
7	Silicone grease	Consumable tool
8	Polyamide tape	Consumable tool
9	Mylar tape	Consumable tool
10	Eraser	Consumable tool
11	Electrical tape	Consumable tool
12	Double-sided tape	Consumable tool
13	Conductive tape	Consumable tool

© Copyright Lenovo 2020

Note: The silicone grease can be applied to the surfaces of the microprocessor and heat sink to eliminate air gaps. The hexagonal socket is used to pick up the antenna connectors.

Major FRUs and CRUs (fan models)

Your computer contains the following types of CRUs and FRUs:

- **Self-service CRUs:** Refer to parts that can be installed or replaced easily by customer themselves or by trained service technicians at an additional cost.
- **Optional-service CRUs:** Refer to parts that can be installed or replaced by customers with a greater skill level. Trained service technicians can also provide service to install or replace the parts under the type of warranty designated for the customer's machine.
- **FRUs:** Refer to parts that must be installed or replaced only by trained service technicians. If customers choose to replace the FRUs by themselves, the product warranty might be affected.

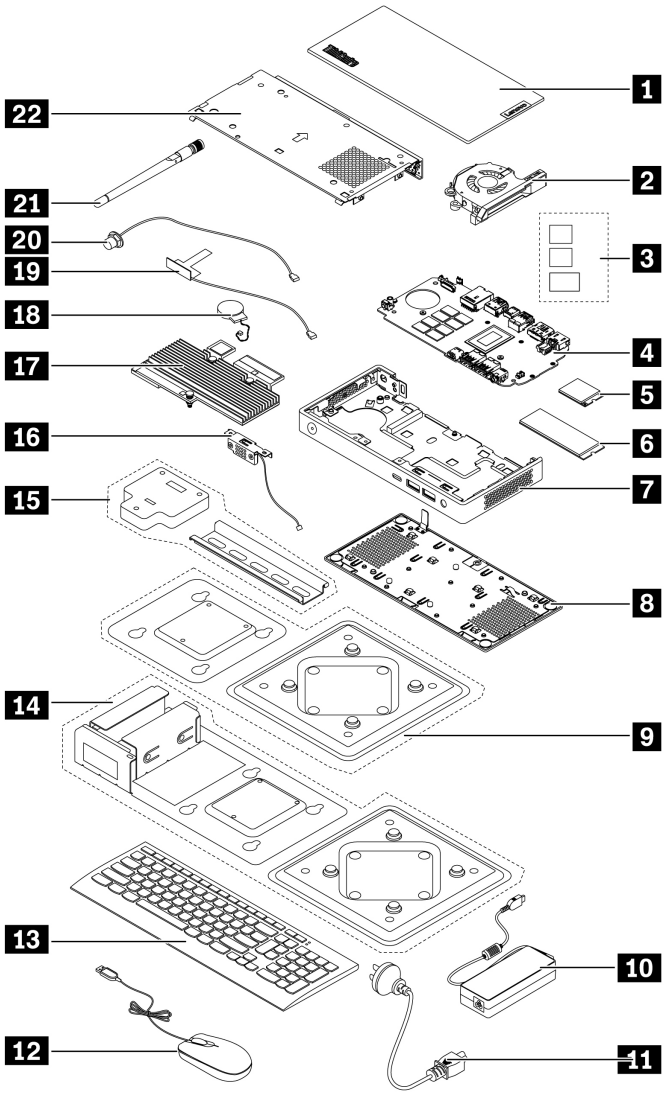

Number	Description	Self-service CRU	Optional-service CRU
1	Computer cover	No	No
2	System fan	No	No
3	Thermal pads (3)	No	No
4	System board	No	No
5	Wi-Fi card*	No	Yes
6	M.2 solid-state drive	Yes	No
7	Chassis	No	No
8	Bottom cover	Yes	No
9	VESA® mount bracket kit*	Yes	No
10	Power adapter*	Yes	No
11	Power cord*	Yes	No
12	Mouse*	Yes	No
13	Keyboard*	Yes	No
14	Power adapter bracket kit*	Yes	No
15	DIN rail bracket kit*	Yes	No
16	Internal speaker	No	No
17	Heat sink	No	No
18	Coin-cell battery	No	No
19	Front Wi-Fi antenna and cable*	No	No
20	Rear Wi-Fi antenna cable*	No	No
21	Rear Wi-Fi antenna*	Yes	No
22	Rear I/O bracket	No	No

For detailed FRU and CRU information, such as the FRU part numbers and supported computer models, go to:
http://www.lenovo.com/serviceparts-lookup

Major FRUs and CRUs (fanless models)

Your computer contains the following types of CRUs and FRUs:

- **Self-service CRUs:** Refer to parts that can be installed or replaced easily by customer themselves or by trained service technicians at an additional cost.
- **Optional-service CRUs:** Refer to parts that can be installed or replaced by customers with a greater skill level. Trained service technicians can also provide service to install or replace the parts under the type of warranty designated for the customer's machine.
- **FRUs:** Refer to parts that must be installed or replaced only by trained service technicians. If customers choose to replace the FRUs by themselves, the product warranty might be affected.

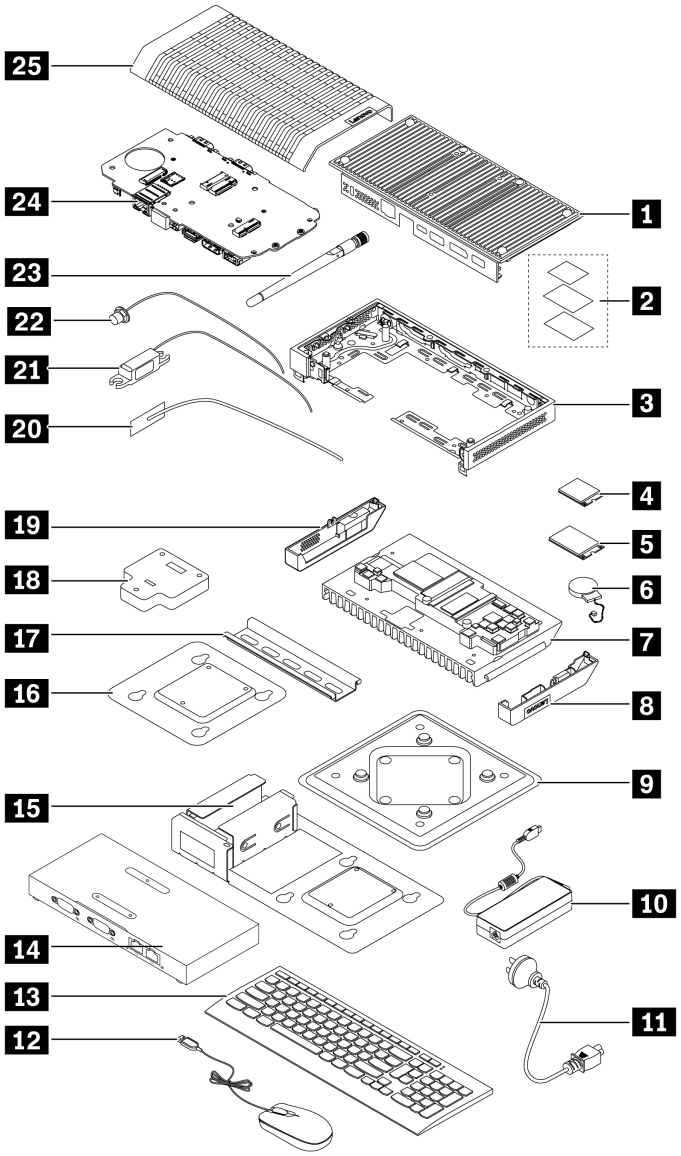

Number	Description	Self-service CRU	Optional-service CRU
1	Bottom cover	Yes	No
2	Thermal pad	No	No
3	Chassis	No	No
4	Wi-Fi card*	No	Yes
5	M.2 solid-state drive	Yes	No
6	Coin-cell battery	No	No
7	Heat sink	No	No
8	Right cover	No	No
9	Wall mount*	Yes	No
10	Power adapter*	Yes	No
11	Power cord*	Yes	No

Number	Description	Self-service CRU	Optional-service CRU
12	Mouse*	Yes	No
13	Keyboard*	Yes	No
14	I/O box*	Yes	No
15	Power adapter bracket*	Yes	No
16	VESA® mount bracket*	Yes	No
17	DIN rail*	Yes	No
18	DIN rail bracket*	Yes	No
19	Left cover	No	No
20	Front Wi-Fi antenna cable*	No	No
21	Internal speaker	No	No
22	Rear Wi-Fi antenna cable*	No	No
23	Rear Wi-Fi antenna*	Yes	No
24	System board	No	No
25	Heat sink cover*	Yes	No

* for selected models

For detailed FRU and CRU information, such as the FRU part numbers and supported computer models, go to:
http://www.lenovo.com/serviceparts-lookup

System board

Fan models

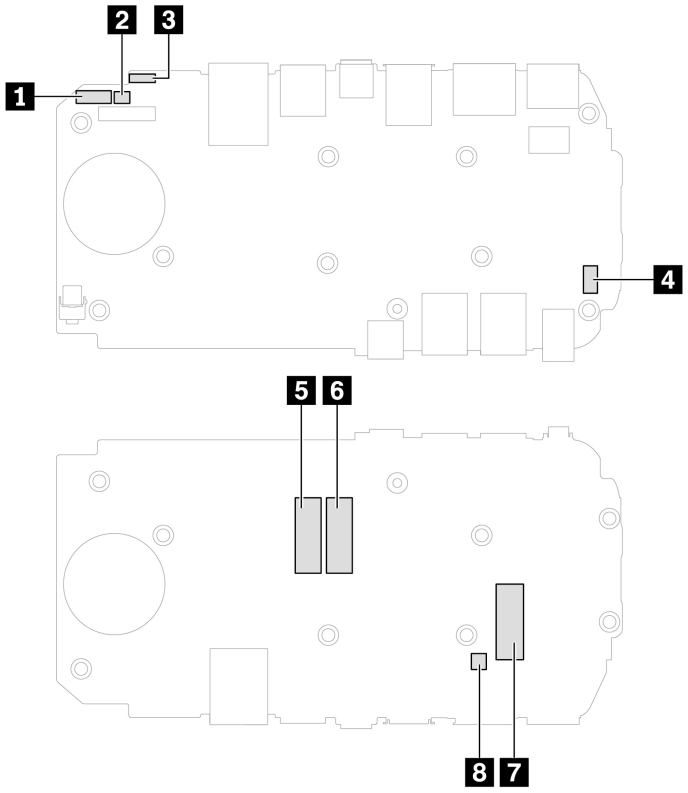

1 Microprocessor fan connector	2 Coin-cell battery connector
3 Clear CMOS (Complementary Metal Oxide Semiconductor) / Recovery jumper	4 Internal speaker connector
5 M.2 solid-state drive slot 1	6 M.2 solid-state drive slot 2 (M.2 SATA solid-state drive compatible)
7 Wi-Fi card slot	8 Cover presence switch connector (intrusion switch connector)

Fanless models

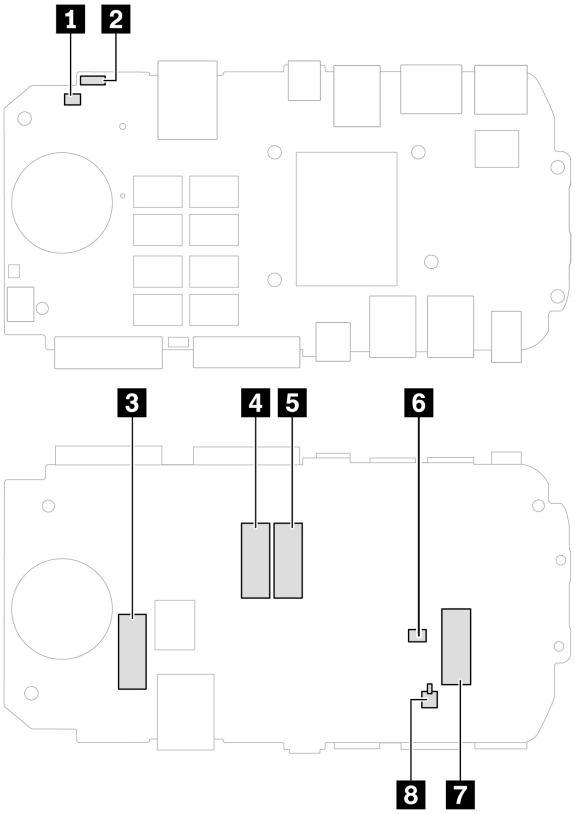

1 Coin-cell battery connector	2 Clear CMOS (Complementary Metal Oxide Semiconductor) / Recovery jumper
3 4G/5G LTE slot	4 M.2 solid-state drive slot 1
5 M.2 solid-state drive slot 2 (for M.2 SATA solid-state drive only)	6 Internal speaker connector
7 Wi-Fi card slot	8 Cover presence switch connector (intrusion switch connector)

Removing and installing hardware (fan models)

This section provides instructions on how to remove and install hardware for your computer. You can expand the capabilities of your computer and maintain your computer by removing or installing hardware.

Attention: Do not open your computer or attempt any repair before reading and understanding the Chapter 1 “Important safety information” on page 1.

External options

You can connect external options to your computer, such as external speakers, a printer, or a scanner. For some external options, you must install additional software in addition to making the physical connection. When installing an external option, see Chapter 3 “Product overview” on page 29 to identify the required connector. Then, use the instructions that come with the option to help you make the connection and install any required software or device drivers.

Power adapter and power cord

Prerequisite

Before you start, read Chapter 1 “Important safety information” on page 1 and print the following instructions.

Replacement procedure

1. Remove any media from the drives and turn off all connected devices and the computer.
2. Disconnect the power cord from the electrical outlet and disconnect all cables from the computer.
3. Remove the power adapter.

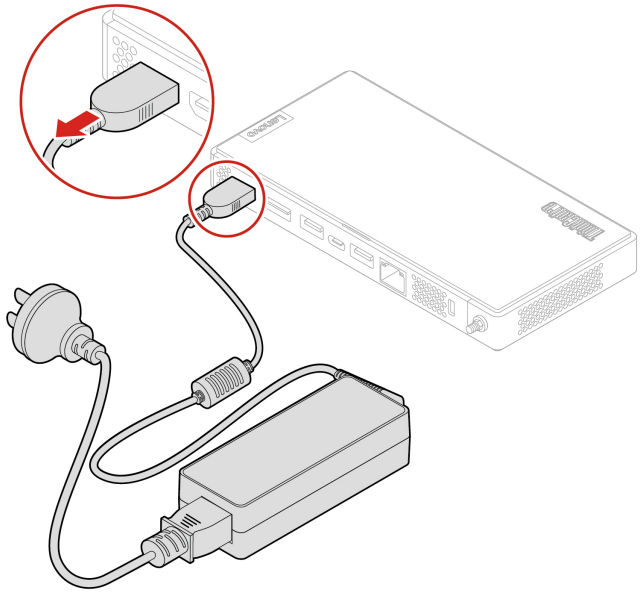

4. Remove the power cord.

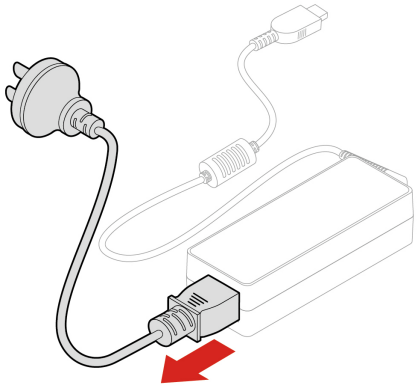

5. Install the power cord.

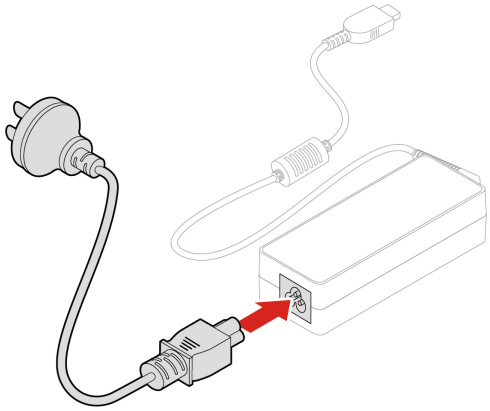

6. Install the power adapter.

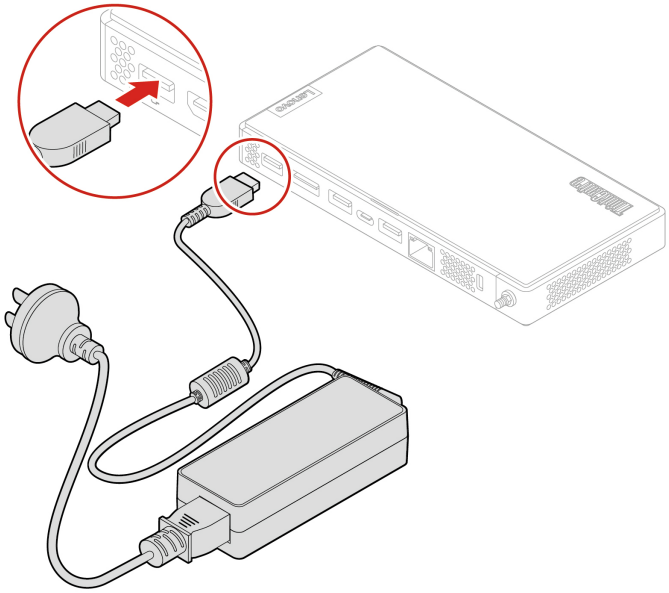

7. Reconnect the external cables to the corresponding connectors on the computer, and then reconnect the power cord to the electrical outlet.

DIN rail bracket kit

Note: The DIN rail bracket kit is available only on some models.

Prerequisite

Before you start, read Chapter 1 “Important safety information” on page 1 and print the following instructions.

Replacement procedure

1. Remove any media from the drives and turn off all connected devices and the computer.
2. Disconnect the power cord from the electrical outlet and disconnect all cables from the computer.

3. Remove the computer with the DIN rail bracket from the rail.

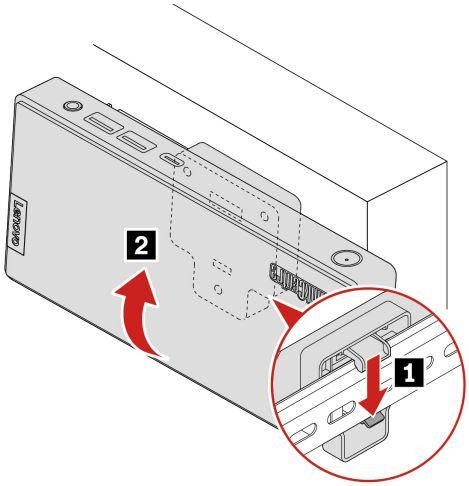

4. Turn over the computer so that the bottom cover is facing up. Then, remove the DIN rail bracket.

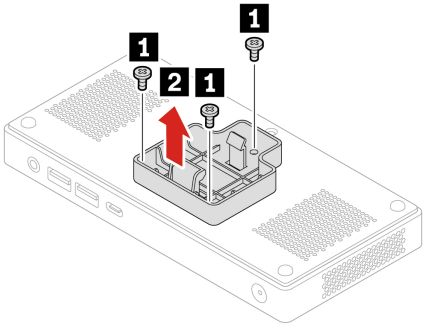

5. Install the DIN rail bracket.

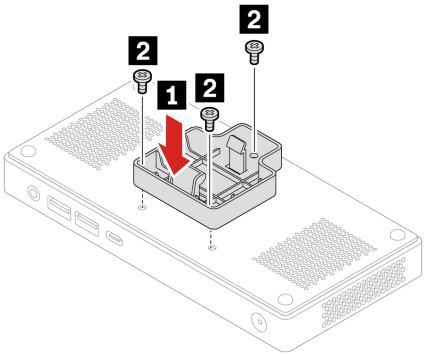

6. If you have not installed the rail, install it to a place where you want to mount the computer.

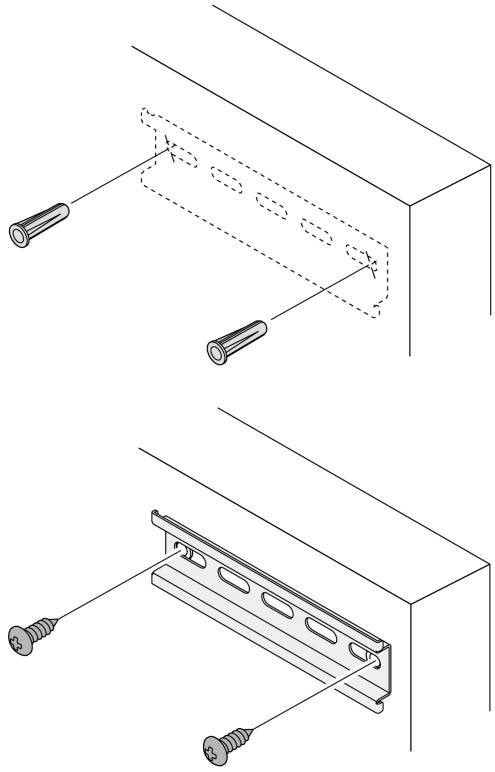

7. Install the computer with the DIN rail bracket to the rail.

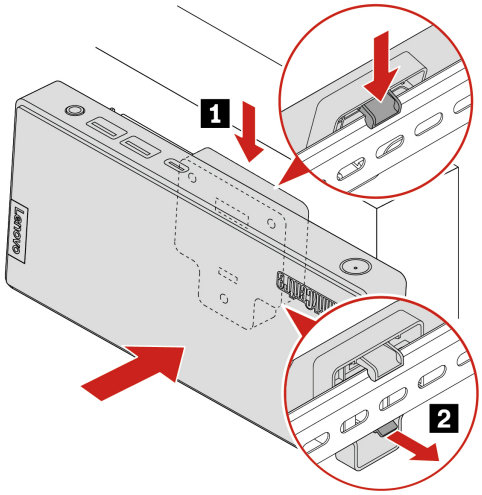

8. Reconnect the external cables to the corresponding connectors on the computer, and then reconnect the power cord to the electrical outlet.

Power adapter bracket kit

Note: The power adapter bracket kit is available only on some models.

Prerequisite

Before you start, read Chapter 1 “Important safety information” on page 1 and print the following instructions.

Replacement procedure

1. Remove any media from the drives and turn off all connected devices and the computer.
2. Disconnect the power cord from the electrical outlet and disconnect all cables from the computer.
3. Remove the screw that secures the power adapter bracket to the wall mount bracket.

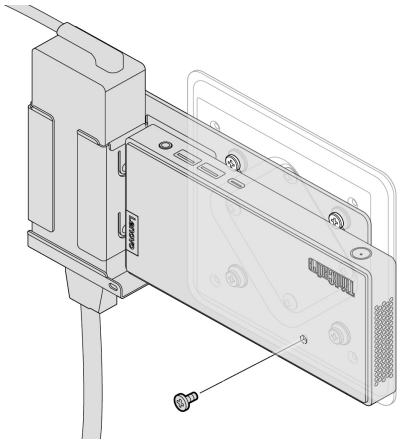

4. Remove the power adapter bracket from the wall mount bracket.

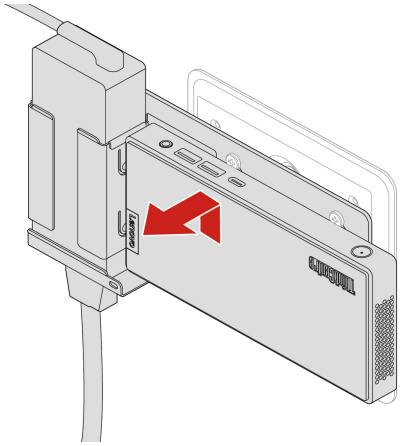

5. Remove the power cord from the power adapter. See “Power adapter and power cord” on page 60.

6. Remove the power adapter from the power adapter bracket.

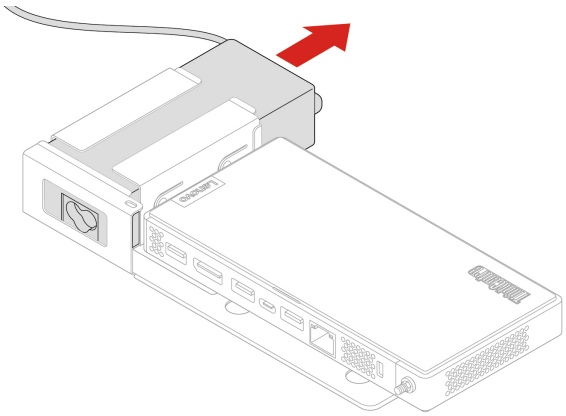

7. Turn over the computer so that the bottom cover is facing up.
8. Remove the power adapter bracket from the computer.

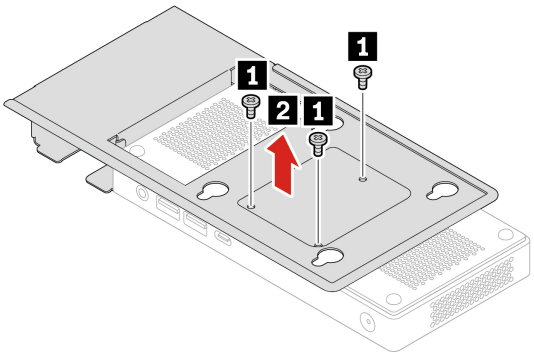

9. Install the power adapter bracket to the computer.

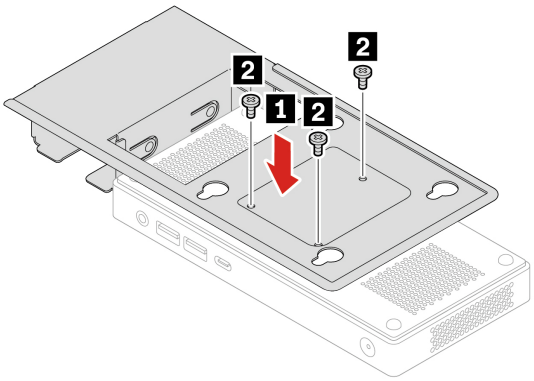

10. Turn over the computer so that the bottom cover is facing down.

11. Install the power adapter into the power adapter bracket.

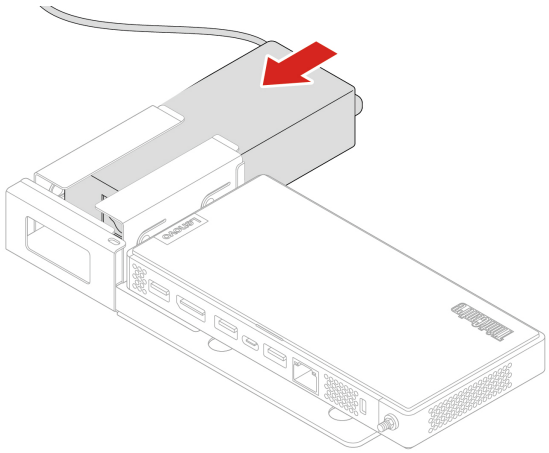

12. Install the power cord to the power adapter. See “Power adapter and power cord” on page 60.
13. Install the power adapter bracket to the wall mount bracket.

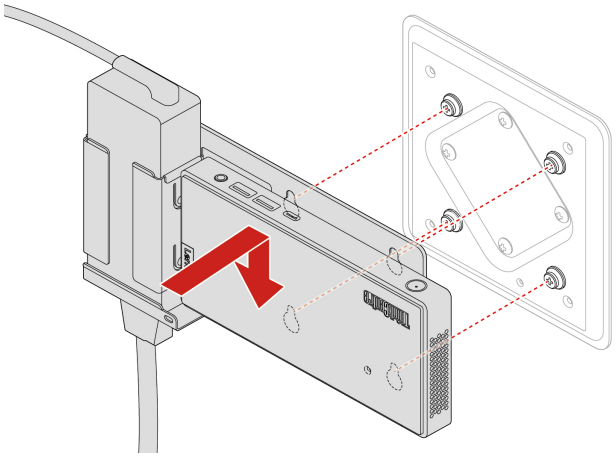

14. Install the screw to secure the power adapter bracket to the wall mount bracket.

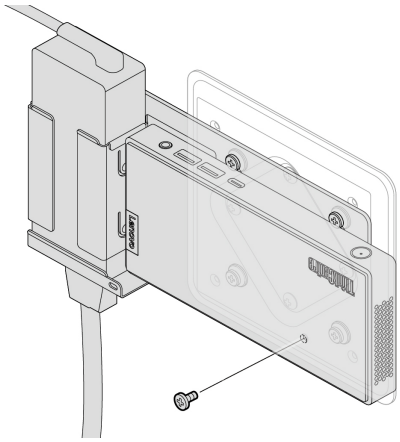

15. Reconnect the external cables and power adapter to the corresponding connectors on the computer, and then reconnect the power cord to the electrical outlet.

VESA mount bracket kit

Note: The VESA mount bracket kit is available only on some models.

Prerequisite

Before you start, read Chapter 1 “Important safety information” on page 1 and print the following instructions.

Replacement procedure

1. Remove any media from the drives and turn off all connected devices and the computer.
2. Disconnect the power cord from the electrical outlet and disconnect all cables from the computer.
3. Remove the screw that secures the VESA mount bracket.

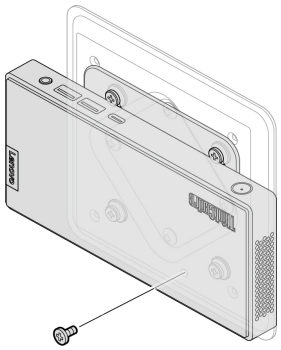

4. Remove the VESA mount bracket from the wall mount bracket.

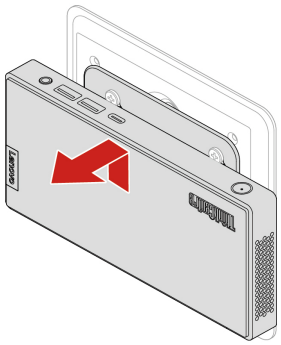

5. Turn over the computer so that the bottom cover is facing up.
6. Remove the VESA mount bracket from the computer.

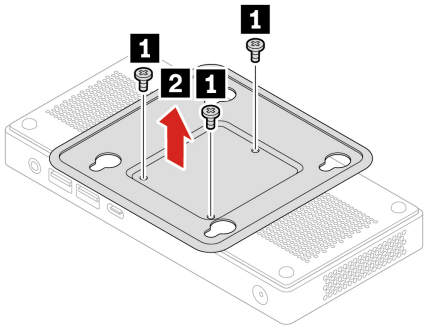

7. Install the VESA mount bracket to the computer.

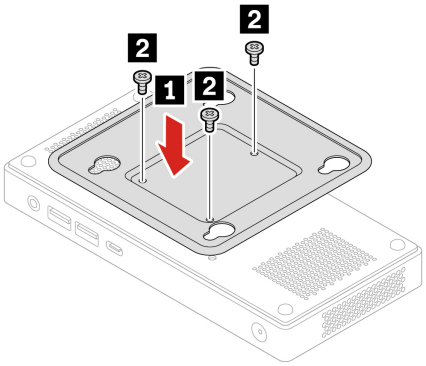

8. Install the VESA mount bracket to the wall mount bracket.

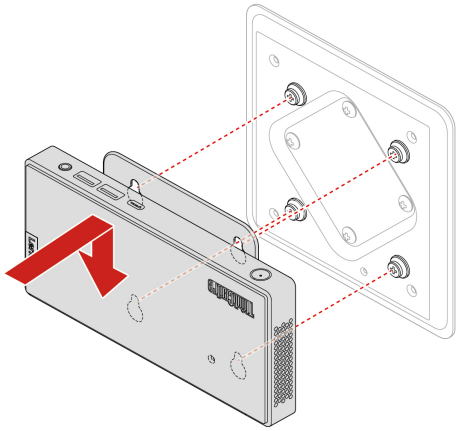

9. Install the screw to secure the VESA mount bracket to the wall mount bracket.

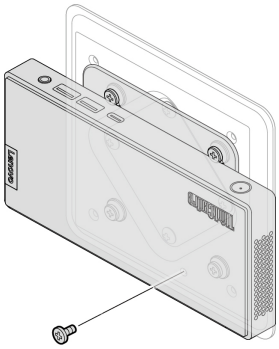

10. Reconnect the external cables and power adapter to the corresponding connectors on the computer, and then reconnect the power cord to the electrical outlet.

Rear Wi-Fi antenna

Note: The rear Wi-Fi antenna is available only on some models.

Prerequisite

Before you start, read Chapter 1 “Important safety information” on page 1 and print the following instructions.

Replacement procedure

1. Remove any media from the drives and turn off all connected devices and the computer.
2. Disconnect the power cord from the electrical outlet and disconnect all cables from the computer.
3. Remove the rear Wi-Fi antenna.

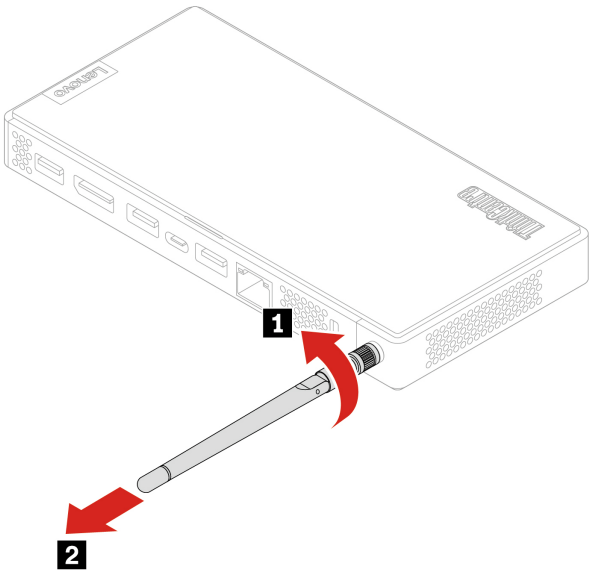

4. Install the rear Wi-Fi antenna.

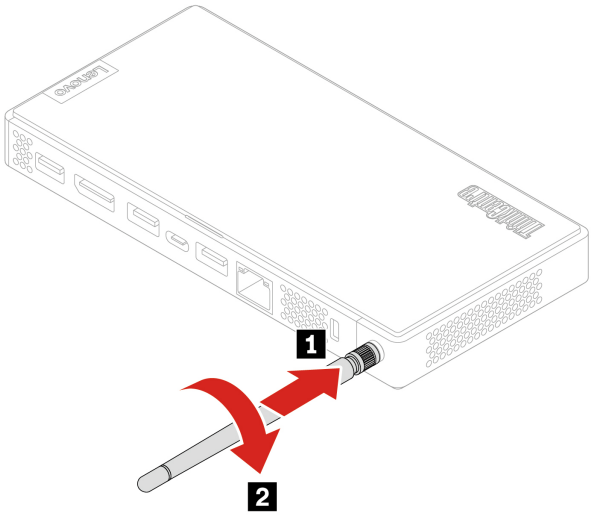

5. Reconnect the external cables and power adapter to the corresponding connectors on the computer, and then reconnect the power cord to the electrical outlet.

Bottom cover

Prerequisite

Before you start, read Chapter 1 “Important safety information” on page 1 and print the following instructions.



Before you open the bottom cover, turn off the computer and wait several minutes until the computer is cool.

Replacement procedure

1. Remove any media from the drives and turn off all connected devices and the computer.
2. Disconnect the power cord from the electrical outlet and disconnect all cables from the computer.
3. Unlock any locking device that secures the computer cover.
4. Remove the bracket, if any. See “DIN rail bracket kit” on page 61, “Power adapter bracket kit” on page 63, or “VESA mount bracket kit” on page 67.
5. Turn over the computer so that the bottom cover is facing up.
6. Remove the bottom cover.

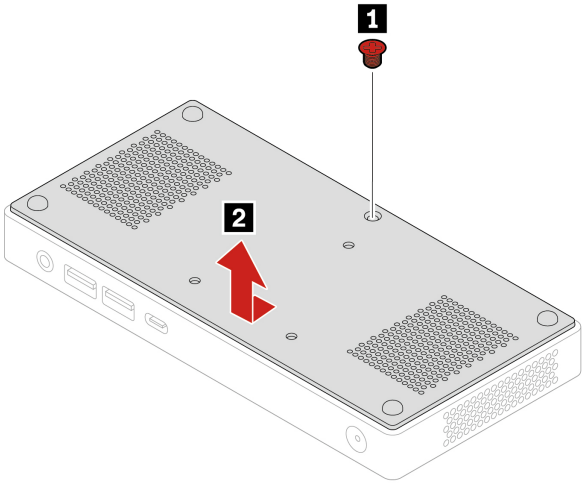

7. Install the bottom cover.

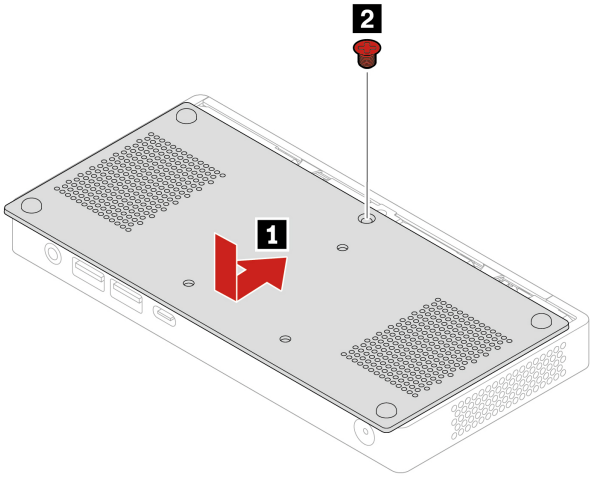

8. Turn over the computer so that the bottom cover is facing down.
9. Reinstall the bracket you have removed.
10. If a locking device is available, use it to lock the computer.

11. Reconnect the external cables and power adapter to the corresponding connectors on the computer, and then reconnect the power cord to the electrical outlet.

Wi-Fi card

Note: The Wi-Fi card and Wi-Fi antenna cables are available only on some models.

Prerequisite

Before you start, read Chapter 1 “Important safety information” on page 1 and print the following instructions.

Replacement procedure

1. Turn over the computer so that the bottom cover is facing up.
2. Remove the bottom cover. See “Bottom cover” on page 69.
3. Remove the Wi-Fi card.

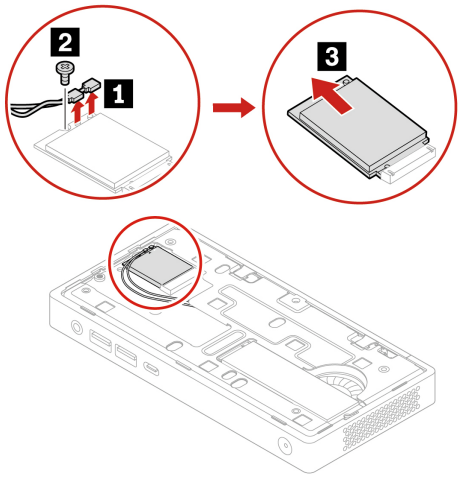

4. Install the Wi-Fi card.

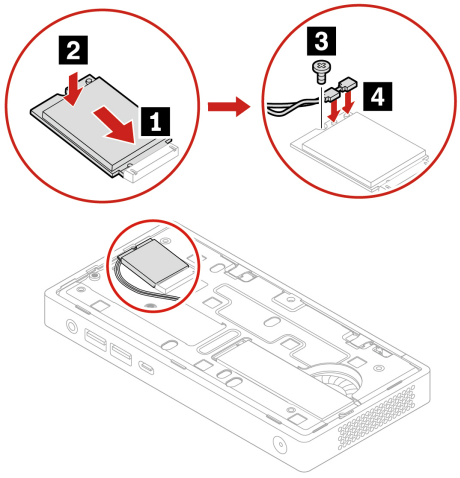

5. Reinstall the removed parts. Turn over the computer so that the bottom cover is facing down.
6. Reconnect the external cables and power adapter to the corresponding connectors on the computer, and then reconnect the power cord to the electrical outlet.

M.2 solid-state drive

Prerequisite

Before you start, read Chapter 1 “Important safety information” on page 1 and print the following instructions.

Replacement procedure

1. Turn over the computer so that the bottom cover is facing up.
2. Remove the bottom cover. See “Bottom cover” on page 69.
3. Remove an M.2 solid-state drive.

   Note: A thermal pad might cover the M.2 solid-state drive. To access the M.2 solid-state drive, peel off the thermal pad first.

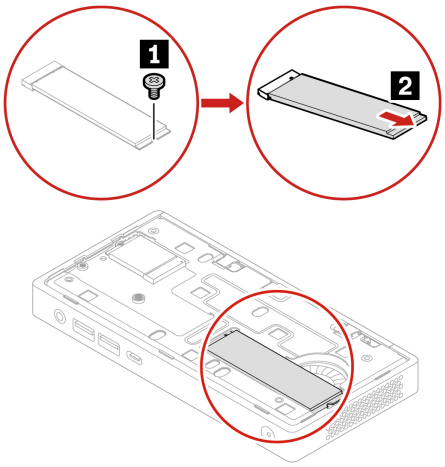

4. Install an M.2 solid-state drive. For more information about the corresponding slot for the M.2 solid-state drive, see “System board” on page 58. Cover the M.2 solid-state drive with a thermal pad if you have removed one.

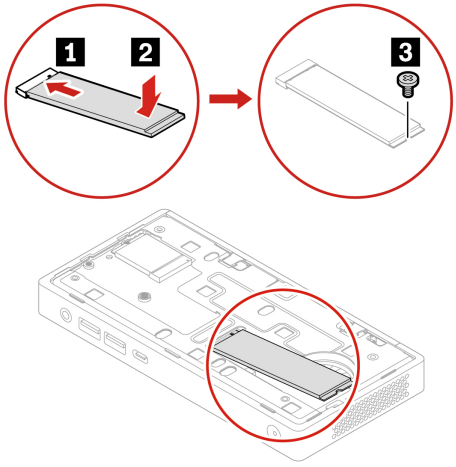

5. Reinstall the removed parts. Turn over the computer so that the bottom cover is facing down.
6. Reconnect the external cables and power adapter to the corresponding connectors on the computer, and then reconnect the power cord to the electrical outlet.

Computer cover and rear I/O bracket

Prerequisite

Before you start, read Chapter 1 “Important safety information” on page 1 and print the following instructions.

Replacement procedure

1. Turn over the computer so that the bottom cover is facing up.
2. Remove the bottom cover. See “Bottom cover” on page 69.
3. Release the retaining latch that secures the rear I/O bracket to the chassis.

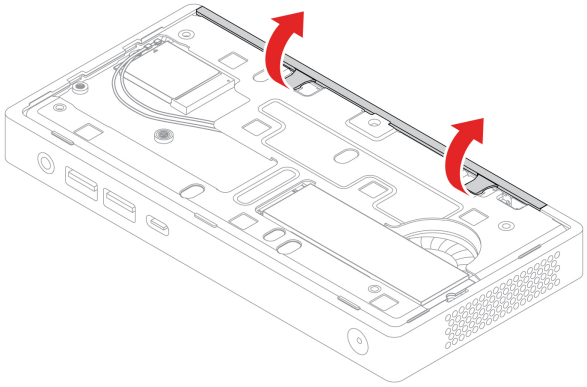

4. Turn over the computer so that the computer cover is facing up.
5. Remove the computer cover and the rear I/O bracket.

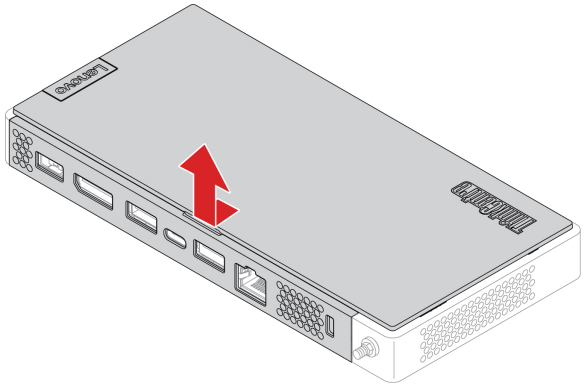

6. Turn over the computer cover and the rear I/O bracket so that the computer cover is facing down.

7. Remove the computer cover from the rear I/O bracket.

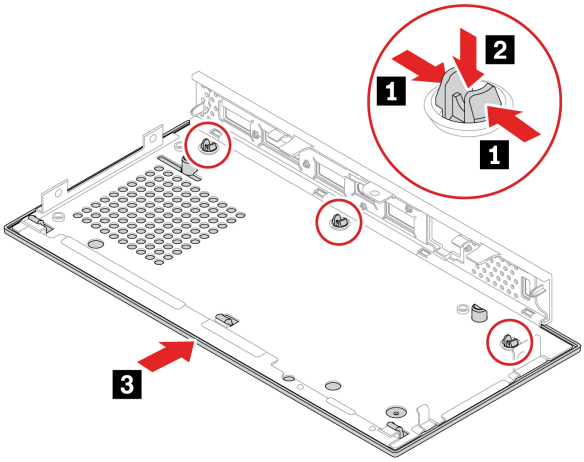

8. Insert the retaining latches on the computer cover into the corresponding holes in the rear I/O bracket.

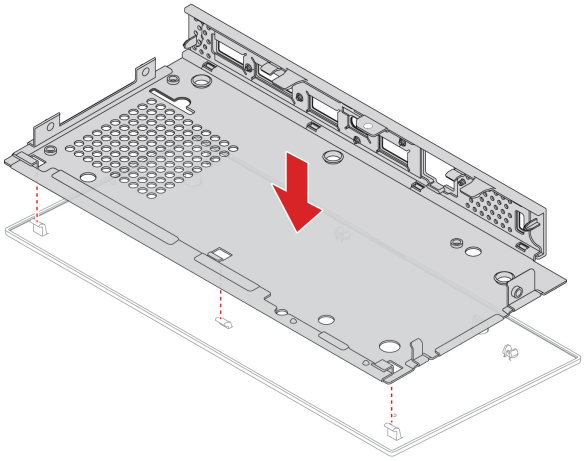

9. Install the computer cover to the rear I/O bracket.

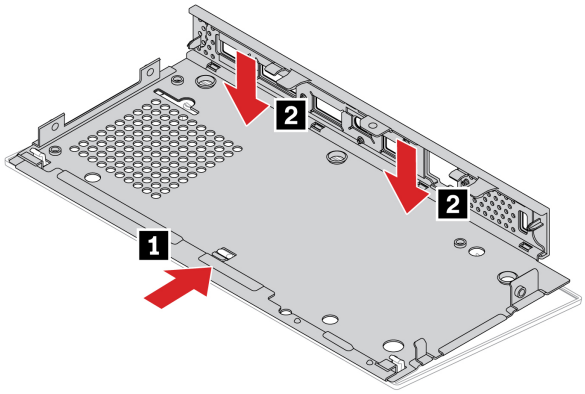

10. Turn over the computer cover and the rear I/O bracket so that the computer cover is facing up.

11. Install the computer cover and the rear I/O bracket to the chassis.

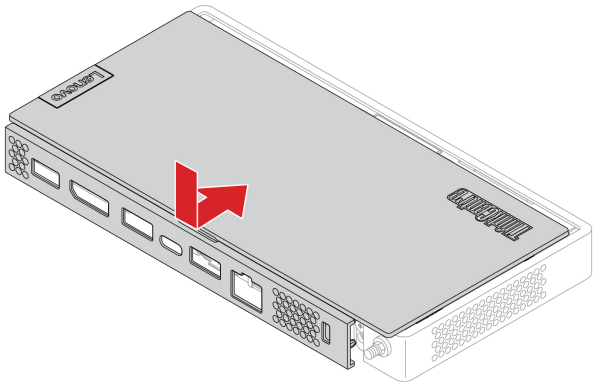

12. Reinstall the removed parts. Then, reconnect the power adapter and all disconnected cables to the computer.
13. Turn over the computer so that the bottom cover is facing down.

Coin-cell battery

Prerequisite

Before you start, read Chapter 1 “Important safety information” on page 1 and print the following instructions.

Replacement procedure

1. Turn over the computer so that the bottom cover is facing up.
2. Remove the bottom cover. See “Bottom cover” on page 69.
3. Turn over the computer so that the computer cover is facing up.
4. Remove the computer cover and the rear I/O bracket. See “Computer cover and rear I/O bracket” on page 73.
5. Disconnect the coin-cell battery cable from the coin-cell battery connector on the system board. See “System board” on page 58.
6. Remove the coin-cell battery.

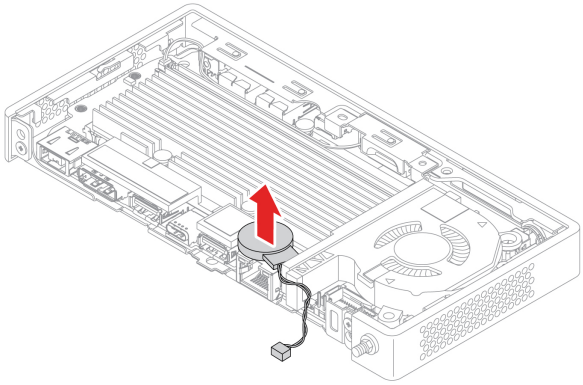

7. Install the coin-cell battery.

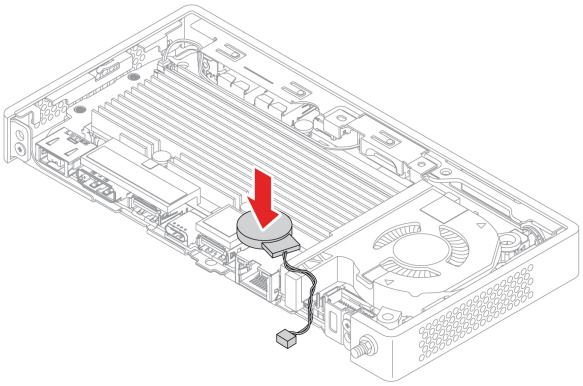

8. Route the coin-cell battery cable under the system fan and connect the cable to the coin-cell battery connector on the system board. See “System board” on page 58.
9. Reinstall the removed parts. Then, reconnect the power adapter and all disconnected cables to the computer.
10. Turn over the computer so that the bottom cover is facing down.

System fan

Prerequisite

Before you start, read Chapter 1 “Important safety information” on page 1 and print the following instructions.

Replacement procedure

1. Turn over the computer so that the bottom cover is facing up.
2. Remove the bottom cover. See “Bottom cover” on page 69.
3. Turn over the computer so that the computer cover is facing up.
4. Remove the computer cover and the rear I/O bracket. See “Computer cover and rear I/O bracket” on page 73.
5. Disconnect the system fan cable from the microprocessor fan connector on the system board. See “System board” on page 58.
6. Remove the system fan.

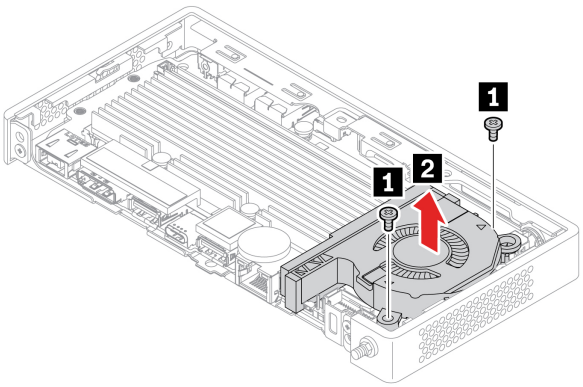

7. Install the system fan.

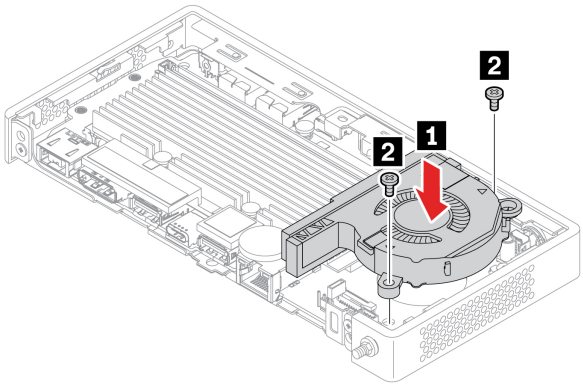

8. Connect the system fan cable to the microprocessor fan connector on the system board. See “System board” on page 58.
9. Reinstall the removed parts. Then, reconnect the power adapter and all disconnected cables to the computer.
10. Turn over the computer so that the bottom cover is facing down.

Internal speaker

Prerequisite

Before you start, read Chapter 1 “Important safety information” on page 1 and print the following instructions.

Replacement procedure

1. Turn over the computer so that the bottom cover is facing up.
2. Remove the bottom cover. See “Bottom cover” on page 69.
3. Turn over the computer so that the computer cover is facing up.
4. Remove the computer cover and the rear I/O bracket. See “Computer cover and rear I/O bracket” on page 73.
5. Disconnect the internal-speaker cable from the internal speaker connector on the system board. See “System board” on page 58.
6. Remove the internal speaker.

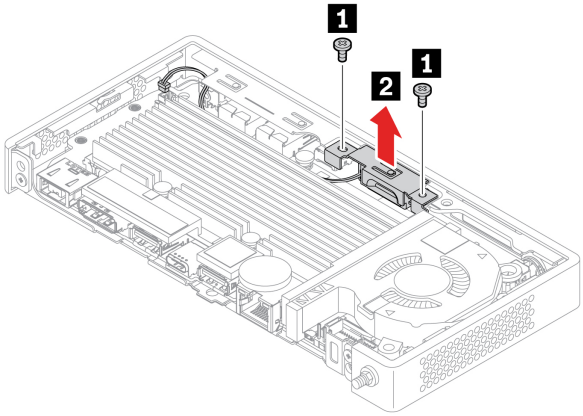

7. Install the internal speaker.

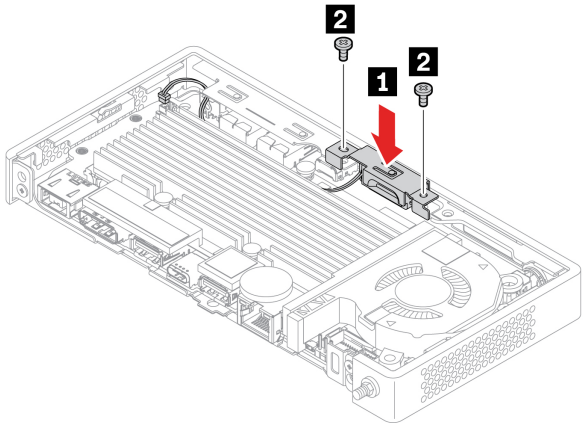

8. Connect the internal speaker cable to the internal speaker connector on the system board. See “System board” on page 58.
9. Reinstall the removed parts. Then, reconnect the power adapter and all disconnected cables to the computer.
10. Turn over the computer so that the bottom cover is facing down.

Heat sink

Prerequisite

Before you start, read Chapter 1 “Important safety information” on page 1 and print the following instructions.



The heat sink might be very hot. Before you open the computer cover, turn off the computer and wait several minutes until the computer is cool.

Replacement procedure

1. Turn over the computer so that the bottom cover is facing up.
2. Remove the bottom cover. See “Bottom cover” on page 69.
3. Turn over the computer so that the computer cover is facing up.
4. Remove the computer cover and the rear I/O bracket. See “Computer cover and rear I/O bracket” on page 73.
5. Remove the internal speaker. See “Internal speaker” on page 77.
6. Remove the system fan. See “System fan” on page 76.

7. Remove the heat sink.

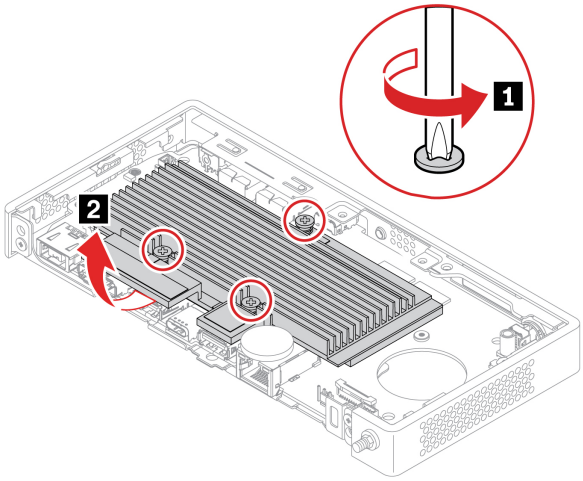

8. Install the heat sink.

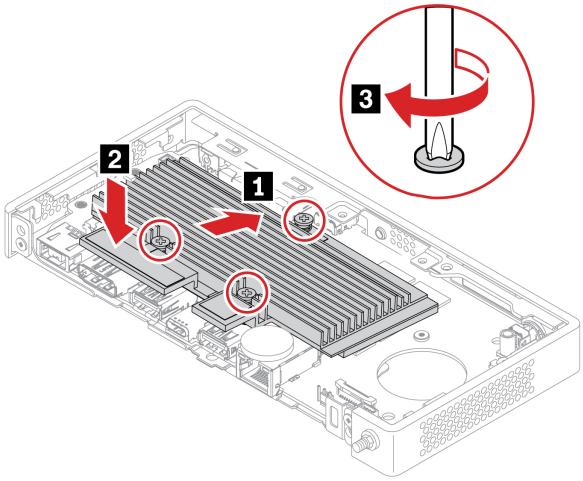

9. Reinstall the removed parts. Then, reconnect the power adapter and all disconnected cables to the computer.
10. Turn over the computer so that the bottom cover is facing down.

System board

Prerequisite

Before you start, read Chapter 1 “Important safety information” on page 1 and print the following instructions.



Avoid contact with hot components inside the computer. During operation, some components become hot enough to burn the skin. Before you open the computer cover, turn off the computer, disconnect power, and wait approximately 10 minutes for the components to cool.

Replacement procedure

1. Remove the bottom cover. See “Bottom cover” on page 69.

2. To get access to the system board, remove the following parts if any:
   a. “Wi-Fi card” on page 71.
   b. “M.2 solid-state drive” on page 72.
   c. “Computer cover and rear I/O bracket” on page 73.
   d. “Coin-cell battery” on page 75.
   e. “System fan” on page 76.
   f. “Internal speaker” on page 77.
   g. “Heat sink” on page 78.
3. Record the cable routing and cable connections, and then disconnect all cables from the system board. See “System board” on page 58.
4. Remove the two screws that secure the system board, and then carefully lift the system board out of the chassis.

   Note: Carefully handle the system board by its edges.

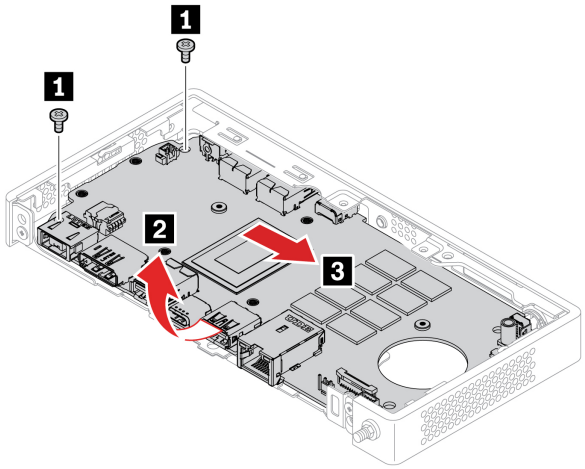

5. Install the new system board into the chassis by aligning the two screw holes in the new system board with the corresponding mounting studs on the chassis. Then, install the two screws to secure the new system board.

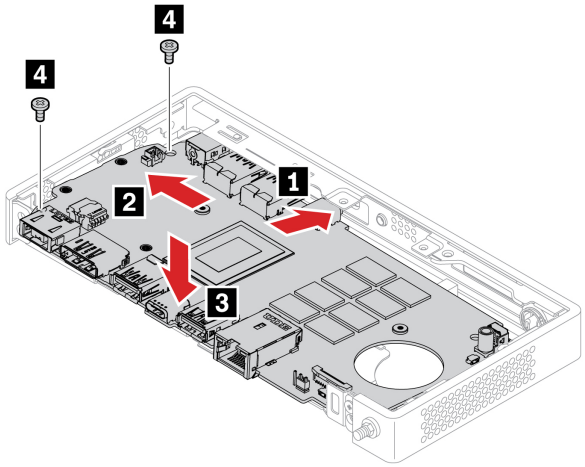

6. Reinstall all parts that you have removed one by one in the reversed sequence as you remove them. Refer to the information that you have noted down and the related topics in “Removing and installing hardware (fan models)” on page 59.
7. Connect all cables to the new system board. See “System board” on page 58.
8. Reconnect the power adapter and all disconnected cables to the computer.
9. Turn over the computer so that the bottom cover is facing down.

Front Wi-Fi antenna and cable

Prerequisite

Before you start, read Chapter 1 “Important safety information” on page 1 and print the following instructions.

Replacement procedure

1. Turn over the computer so that the bottom cover is facing up.
2. Remove the bottom cover. See “Bottom cover” on page 69.
3. To get access to the front Wi-Fi antenna and cable, remove the following parts if any:
   a. “Wi-Fi card” on page 71.
   b. “M.2 solid-state drive” on page 72.
   c. “Computer cover and rear I/O bracket” on page 73.
   d. “Coin-cell battery” on page 75.
   e. “System fan” on page 76.
   f. “Internal speaker” on page 77.
   g. “Heat sink” on page 78.
   h. “System board” on page 79.
4. Peel off the tapes that secure the front and rear Wi-Fi antenna cables. Remove the front Wi-Fi antenna and cable.

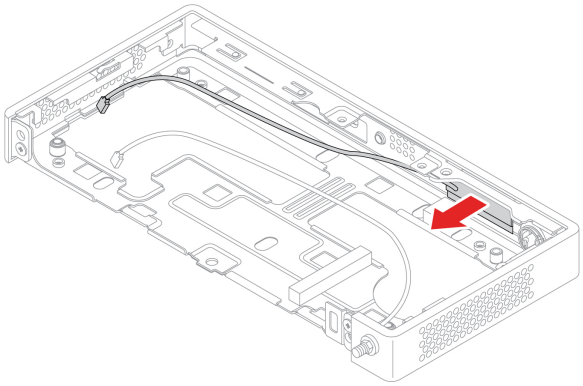

5. Install the front Wi-Fi antenna and cable. Secure the front and rear Wi-Fi antenna cables with tapes.

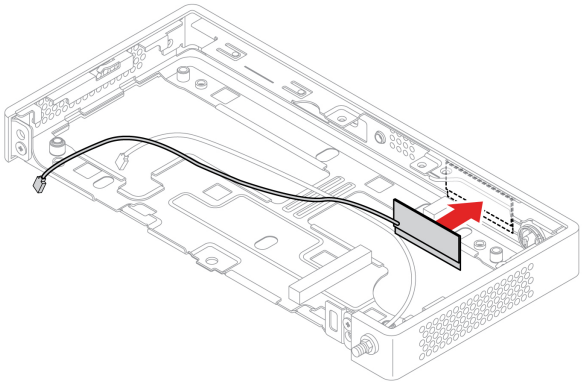

6. Reinstall all parts that you have removed one by one in the reversed sequence as you remove them. Then, reconnect the power adapter and all disconnected cables to the computer.
7. Turn over the computer so that the bottom cover is facing down.

Rear Wi-Fi antenna cable

Prerequisite

Before you start, read Chapter 1 “Important safety information” on page 1 and print the following instructions.

Replacement procedure

1. Remove the rear Wi-Fi antenna. See “Rear Wi-Fi antenna” on page 68.
2. Turn over the computer so that the bottom cover is facing up.
3. Remove the bottom cover. See “Bottom cover” on page 69.
4. To get access to the rear Wi-Fi antenna cable, remove the following parts if any:
   a. “Wi-Fi card” on page 71.
   b. “M.2 solid-state drive” on page 72.
   c. “Computer cover and rear I/O bracket” on page 73.
   d. “Coin-cell battery” on page 75.
   e. “System fan” on page 76.
   f. “Internal speaker” on page 77.
   g. “Heat sink” on page 78.
   h. “System board” on page 79.

5. Peel off the tapes that secure the front and rear Wi-Fi antenna cables. Remove the rear Wi-Fi antenna cable.

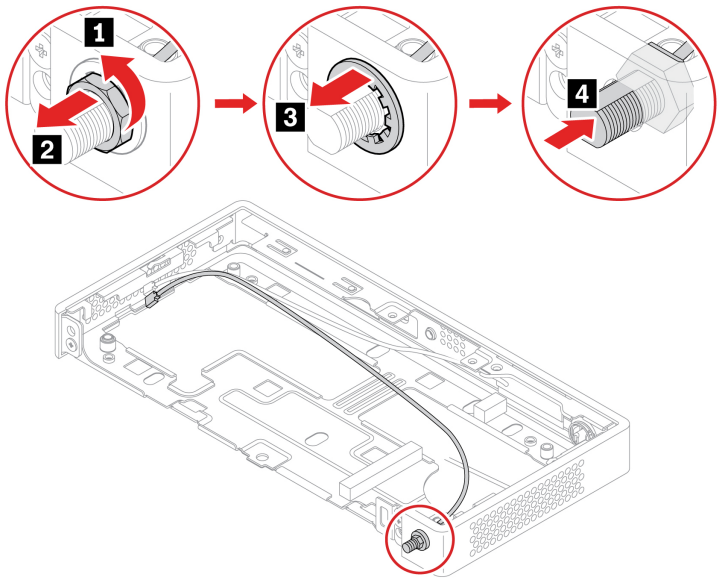

6. Install the rear Wi-Fi antenna cable. Secure the front and rear Wi-Fi antenna cables with tapes.

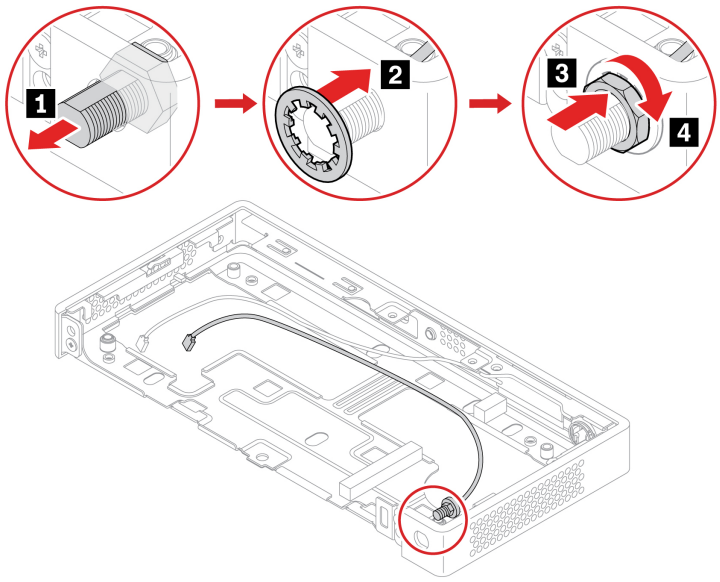

7. Reinstall all parts that you have removed one by one in the reversed sequence as you remove them. Then, reconnect the power adapter and all disconnected cables to the computer.
8. Turn over the computer so that the bottom cover is facing down.

Removing and installing hardware (fanless models)

This section provides instructions on how to remove and install hardware for your computer. You can expand the capabilities of your computer and maintain your computer by removing or installing hardware.

Attention: Do not open your computer or attempt any repair before reading and understanding the Chapter 1 “Important safety information” on page 1.

External options

You can connect external options to your computer, such as external speakers, a printer, or a scanner. For some external options, you must install additional software in addition to making the physical connection. When installing an external option, see Chapter 3 “Product overview” on page 29 to identify the required connector. Then, use the instructions that come with the option to help you make the connection and install any required software or device drivers.

Power adapter and power cord

Note: The power adapter and power cord are available only on some models.

Prerequisite

Before you start, read Chapter 1 “Important safety information” on page 1 and print the following instructions.



Avoid contact with the hot computer. During operation, the computer becomes hot enough to burn the skin. Before you touch the computer, turn off the computer, disconnect power, and wait approximately 30 minutes for the computer to cool.

Replacement procedure

1. Remove any media from the drives and turn off all connected devices and the computer.
2. Disconnect the power cord from the electrical outlet and disconnect all cables from the computer.
3. Remove the power adapter.

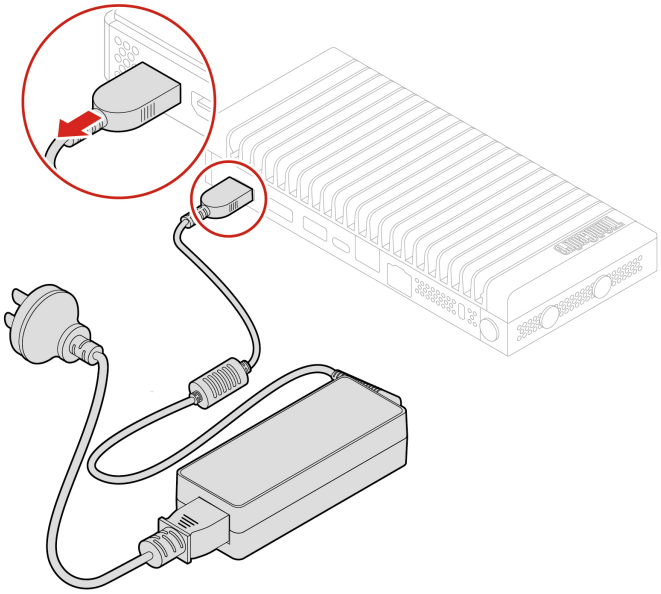

4. Remove the power cord.

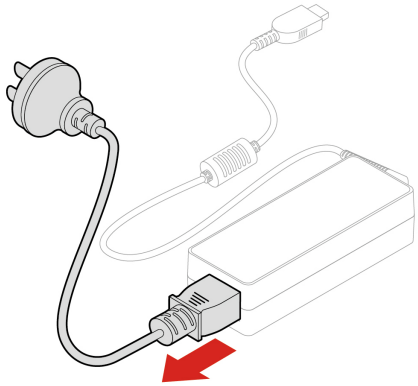

5. Install the power cord.

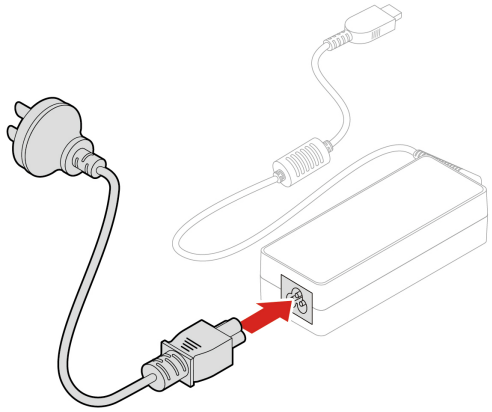

6. Install the power adapter.

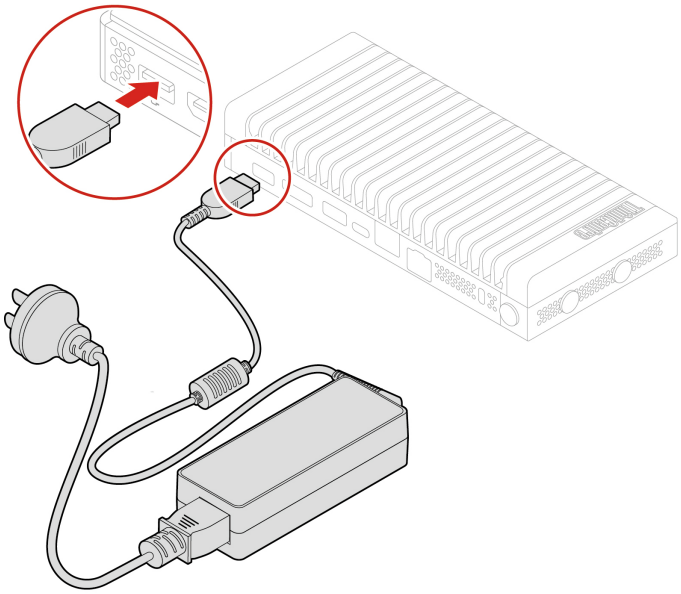

7. Reconnect the external cables to the corresponding connectors on the computer, and then reconnect the power cord to the electrical outlet.

Heat sink cover

Note: The heat sink cover is available only on some models.

Prerequisite

Before you start, read Chapter 1 “Important safety information” on page 1 and print the following instructions.



Avoid contact with the hot computer. During operation, the computer becomes hot enough to burn the skin. Before you touch the computer, turn off the computer, disconnect power, and wait approximately 30 minutes for the computer to cool.

Replacement procedure

1. Remove any media from the drives and turn off all connected devices and the computer.
2. Disconnect the power cord from the electrical outlet and disconnect all cables from the computer.
3. Remove the heat sink cover.

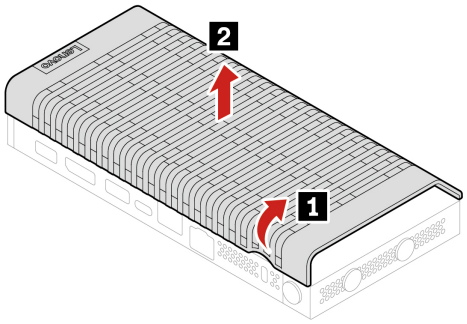

4. Install the heat sink cover.

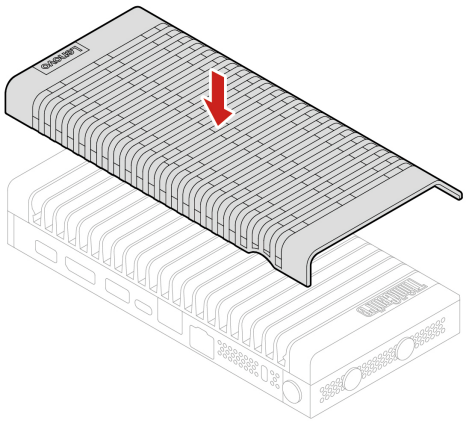

5. Reconnect the external cables and power adapter to the corresponding connectors on the computer, and then reconnect the power cord to the electrical outlet.

DIN rail bracket kit

Note: The DIN rail bracket kit is available only on some models.

Prerequisite

Before you start, read Chapter 1 “Important safety information” on page 1 and print the following instructions.



Avoid contact with the hot computer. During operation, the computer becomes hot enough to burn the skin. Before you touch the computer, turn off the computer, disconnect power, and wait approximately 30 minutes for the computer to cool.

Replacement procedure

1. Remove any media from the drives and turn off all connected devices and the computer.
2. Disconnect the power cord from the electrical outlet and disconnect all cables from the computer.
3. Remove the computer with the DIN rail bracket from the rail.

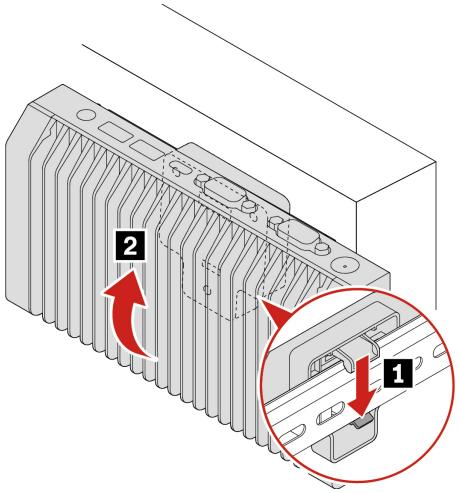

4. Remove the heat sink cover, if any. See “Heat sink cover” on page 86.
5. Turn over the computer so that the bottom cover is facing up. Then, remove the DIN rail bracket.

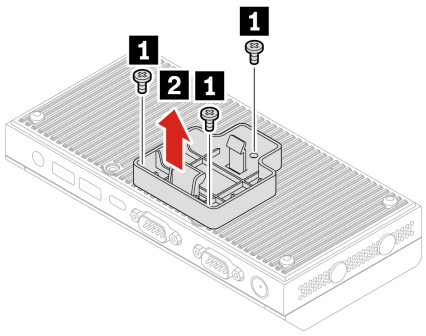

6. Install the DIN rail bracket.

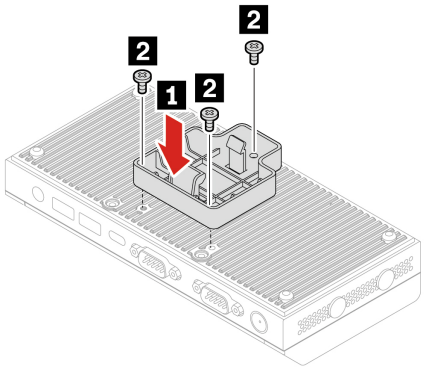

7. Reinstall all removed parts.
8. If you have not installed the rail, install it to a place where you want to mount the computer.

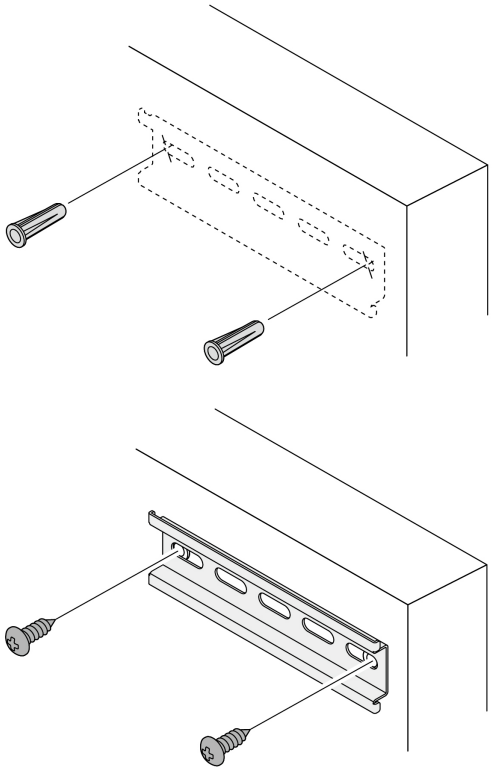

9. Install the computer with the DIN rail bracket to the rail.

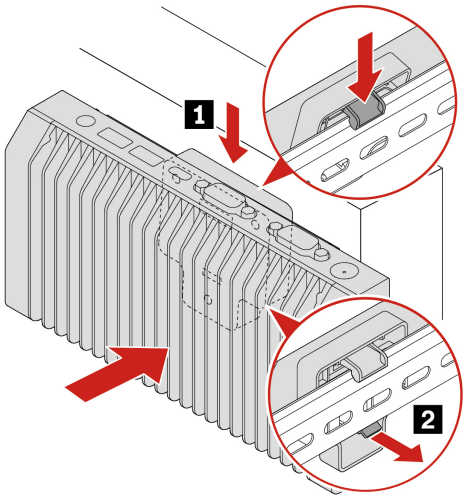

10. Reconnect the external cables to the corresponding connectors on the computer, and then reconnect the power cord to the electrical outlet.

Power adapter bracket kit

Note: The power adapter bracket kit is available only on some models.

Prerequisite

Before you start, read Chapter 1 “Important safety information” on page 1 and print the following instructions.



Avoid contact with the hot computer. During operation, the computer becomes hot enough to burn the skin. Before you touch the computer, turn off the computer, disconnect power, and wait approximately 30 minutes for the computer to cool.

Replacement procedure

1. Remove any media from the drives and turn off all connected devices and the computer.
2. Disconnect the power cord from the electrical outlet and disconnect all cables from the computer.
3. Remove the heat sink cover, if any. See “Heat sink cover” on page 86.

4. Remove the screw that secures the power adapter bracket to the wall mount bracket.

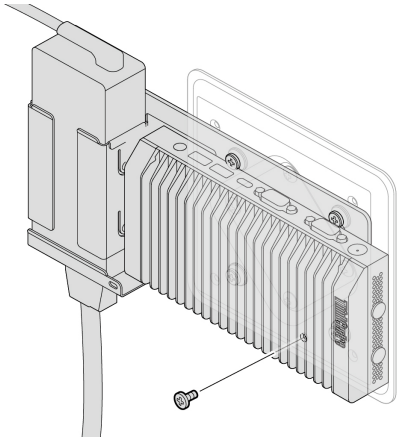

5. Remove the power adapter bracket from the wall mount bracket.

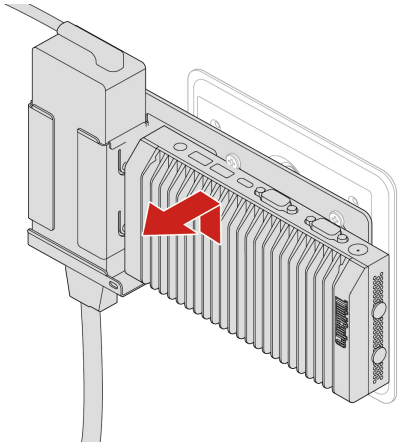

6. Remove the power cord from the power adapter. See “Power adapter and power cord” on page 84.
7. Remove the power adapter from the power adapter bracket.

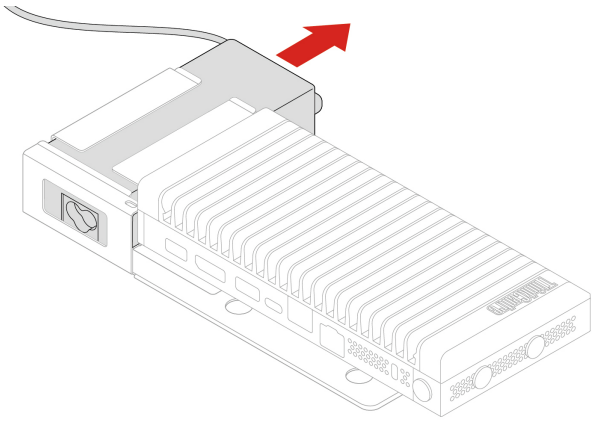

8. Turn over the computer so that the bottom cover is facing up.

9. Remove the power adapter bracket from the computer.

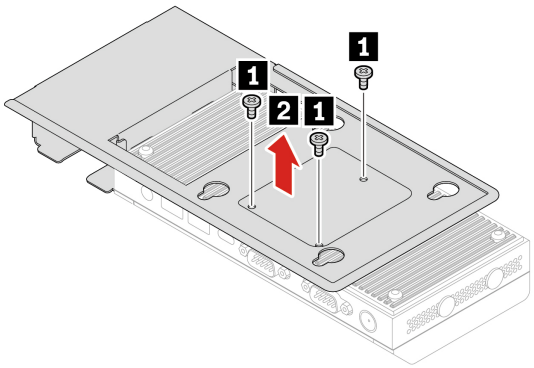

10. Install the power adapter bracket to the computer.

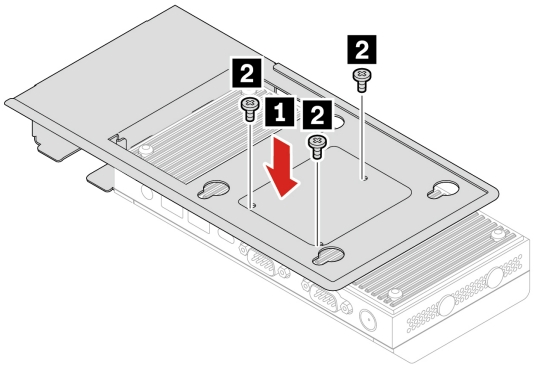

11. Turn over the computer so that the bottom cover is facing down.
12. Install the power adapter into the power adapter bracket.

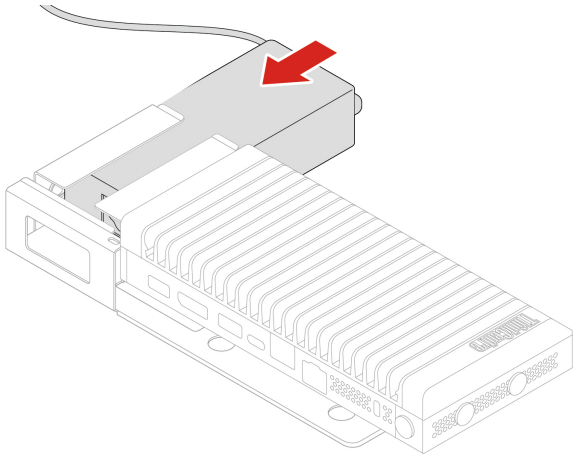

13. Install the power cord to the power adapter. See “Power adapter and power cord” on page 84.

14. Install the power adapter bracket to the wall mount bracket.

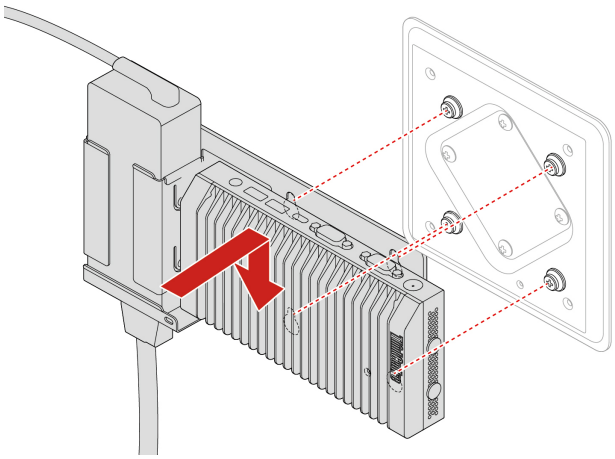

15. Install the screw to secure the power adapter bracket to the wall mount bracket.

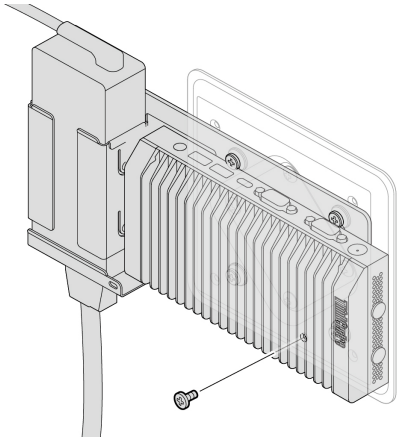

16. Reinstall all removed parts, if any.
17. Reconnect the external cables and power adapter to the corresponding connectors on the computer, and then reconnect the power cord to the electrical outlet.

VESA mount bracket kit

Note: The VESA mount bracket kit is available only on some models.

Prerequisite

Before you start, read Chapter 1 “Important safety information” on page 1 and print the following instructions.



Avoid contact with the hot computer. During operation, the computer becomes hot enough to burn the skin. Before you touch the computer, turn off the computer, disconnect power, and wait approximately 30 minutes for the computer to cool.

Replacement procedure

1. Remove any media from the drives and turn off all connected devices and the computer.

2. Disconnect the power cord from the electrical outlet and disconnect all cables from the computer.
3. Remove the heat sink cover, if any. See “Heat sink cover” on page 86.
4. Remove the screw that secures the VESA mount bracket.

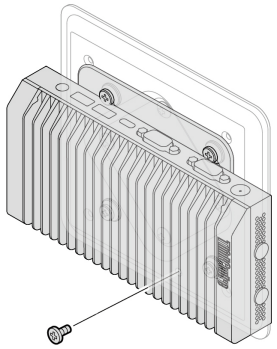

5. Remove the VESA mount bracket from the wall mount bracket.

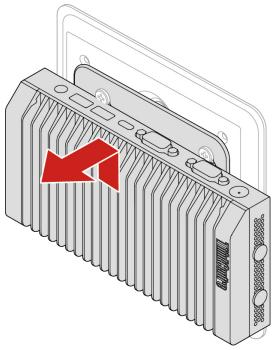

6. Turn over the computer so that the bottom cover is facing up.
7. Remove the VESA mount bracket from the computer.

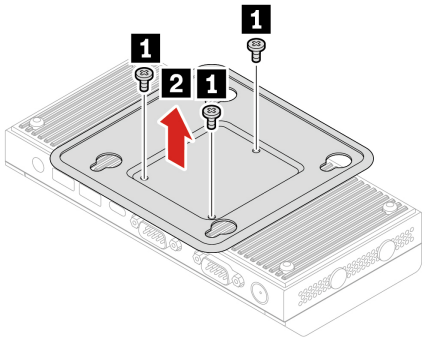

8. Install the VESA mount bracket to the computer.

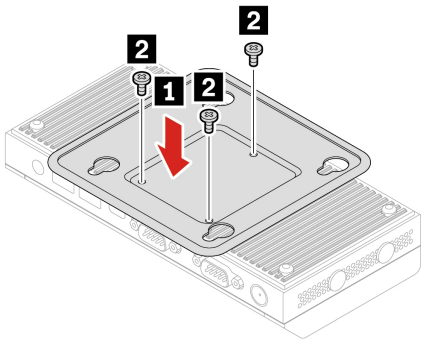

9. Install the VESA mount bracket to the wall mount bracket.

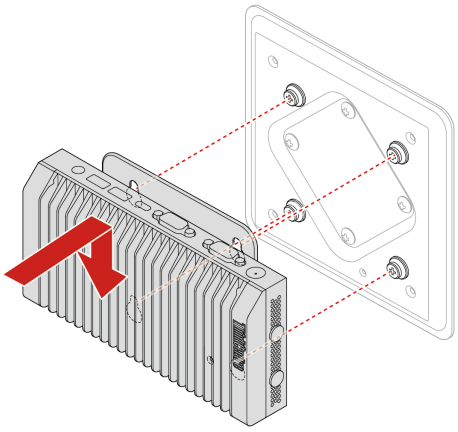

10. Install the screw to secure the VESA mount bracket to the wall mount bracket.

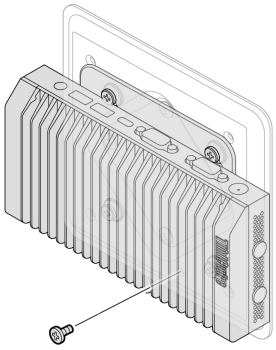

11. Reinstall all removed parts, if any.
12. Reconnect the external cables and power adapter to the corresponding connectors on the computer, and then reconnect the power cord to the electrical outlet.

I/O box

Notes:

- The I/O box is available only on some models.

- After you install the I/O box to the computer, you can still mount the I/O box and the computer together to the wall by using a matched DIN rail bracket kit or a VESA mount bracket kit. For details, see “DIN rail bracket kit” on page 87 or “VESA mount bracket kit” on page 92.

Prerequisite

Before you start, read Chapter 1 “Important safety information” on page 1 and print the following instructions.



Avoid contact with the hot computer. During operation, the computer becomes hot enough to burn the skin. Before you touch the computer, turn off the computer, disconnect power, and wait approximately 30 minutes for the computer to cool.

Replacement procedure

1. Remove any media from the drives and turn off all connected devices and the computer.
2. Disconnect the power cord from the electrical outlet and disconnect all cables from the computer and the I/O box.
3. Remove the heat sink cover, if any. See “Heat sink cover” on page 86.
4. Turn over the computer and the I/O box together so that the I/O box is on top.
5. Loosen the two screws that secure the USB-C adapter to the I/O box to remove the USB-C adapter. Remove the three screws that secure the I/O box to the computer. Then, remove the I/O box.

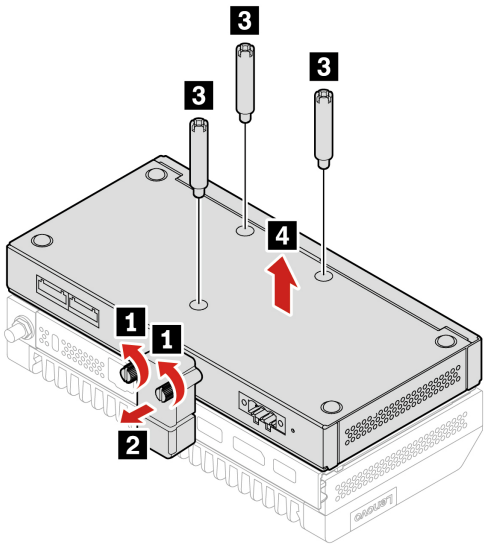

6. Install a new I/O box. Then, install the USB-C adapter.

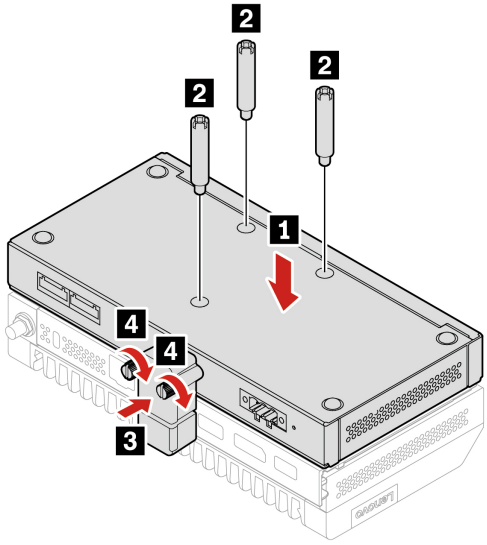

7. Turn over the computer and the I/O box together so that the computer is on top.
8. Reinstall all removed parts, if any. Then, reconnect the power cord and all disconnected cables to the computer and the I/O box.

Rear Wi-Fi antenna

Note: The rear Wi-Fi antenna is available only on some models.

Prerequisite

Before you start, read Chapter 1 “Important safety information” on page 1 and print the following instructions.



Avoid contact with the hot computer. During operation, the computer becomes hot enough to burn the skin. Before you touch the computer, turn off the computer, disconnect power, and wait approximately 30 minutes for the computer to cool.

Replacement procedure

1. Remove any media from the drives and turn off all connected devices and the computer.
2. Disconnect the power cord from the electrical outlet and disconnect all cables from the computer.

3. Remove the rear Wi-Fi antenna.

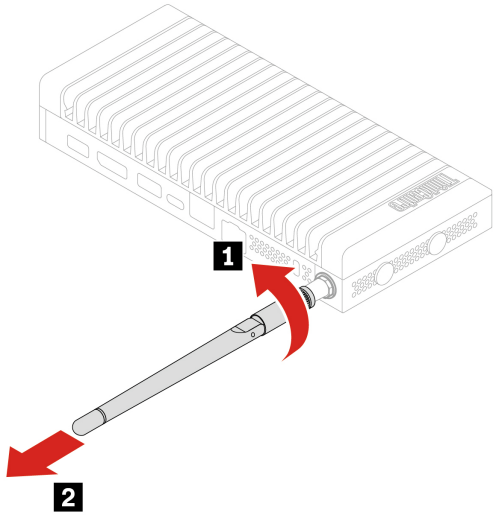

4. Install the rear Wi-Fi antenna.

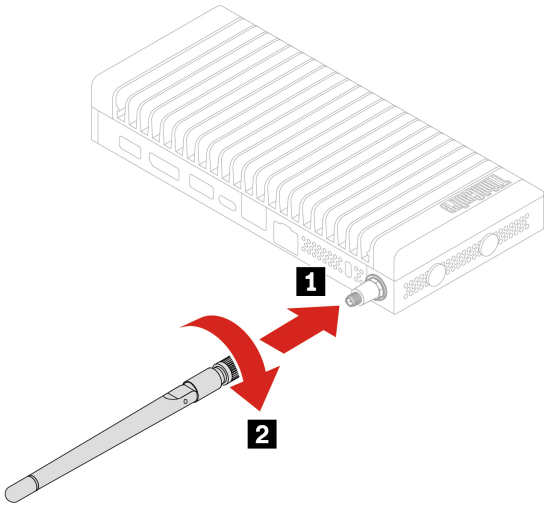

5. Reconnect the external cables and power adapter to the corresponding connectors on the computer, and then reconnect the power cord to the electrical outlet.

Bottom cover

Prerequisite

Before you start, read Chapter 1 “Important safety information” on page 1 and print the following instructions.



Avoid contact with the hot computer. During operation, the computer becomes hot enough to burn the skin. Before you touch the computer, turn off the computer, disconnect power, and wait approximately 30 minutes for the computer to cool.

Replacement procedure

1. Remove any media from the drives and turn off all connected devices and the computer.
2. Disconnect the power cord from the electrical outlet and disconnect all cables from the computer.
3. Unlock any locking device that secures the computer cover.
4. Remove the bracket, if any. See “DIN rail bracket kit” on page 87, “VESA mount bracket kit” on page 92, and “Power adapter bracket kit” on page 89.
5. Turn over the computer so that the bottom cover is facing up.
6. Remove the bottom cover.

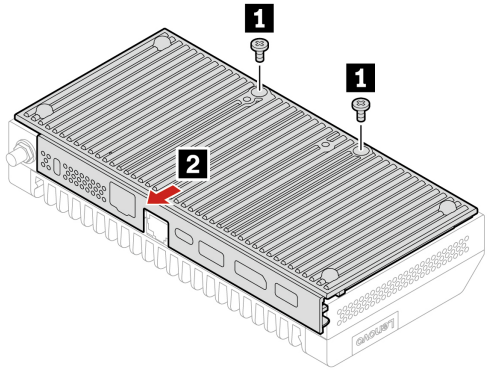

7. Install the bottom cover.

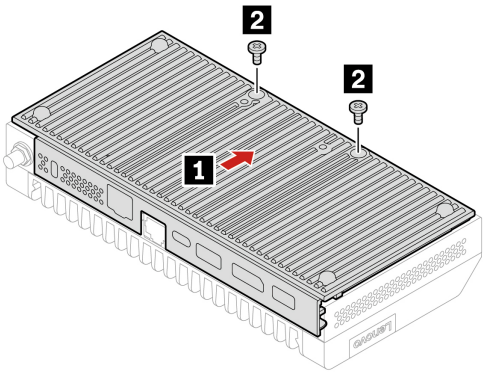

8. Turn over the computer so that the bottom cover is facing down.
9. Reinstall all removed parts, if any.
10. Reconnect the external cables and power adapter to the corresponding connectors on the computer, and then reconnect the power cord to the electrical outlet.

Wi-Fi card

Note: The Wi-Fi card and Wi-Fi antenna cables are available only on some models.

Prerequisite

Before you start, read Chapter 1 “Important safety information” on page 1 and print the following instructions.



Avoid contact with the hot computer. During operation, the computer becomes hot enough to burn the skin. Before you touch the computer, turn off the computer, disconnect power, and wait approximately 30 minutes for the computer to cool.

Replacement procedure

1. Turn over the computer so that the bottom cover is facing up.
2. Remove the bottom cover. See “Bottom cover” on page 97.
3. Remove the Wi-Fi card.

   Note: Pay attention not to get the backup washer under the Wi-Fi card lost.

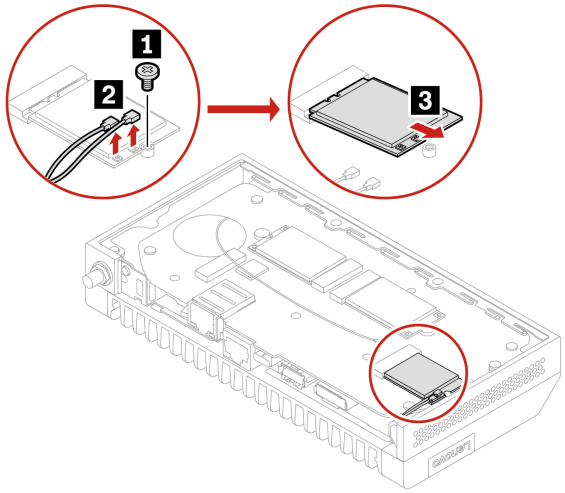

4. Install the Wi-Fi card.

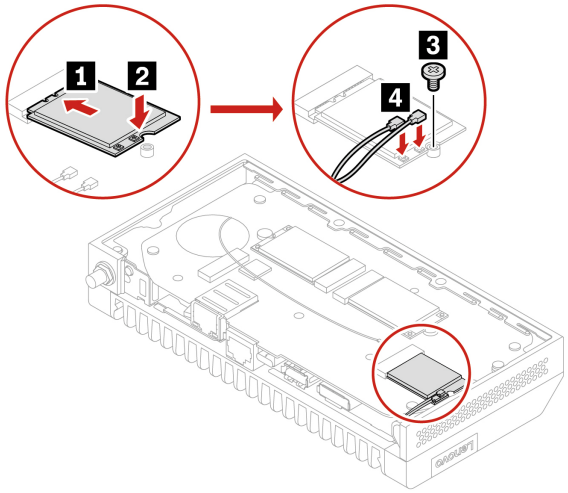

5. Reinstall all removed parts. Turn over the computer so that the bottom cover is facing down.
6. Reconnect the external cables and power adapter to the corresponding connectors on the computer, and then reconnect the power cord to the electrical outlet.

M.2 solid-state drives

Prerequisite

Before you start, read Chapter 1 “Important safety information” on page 1 and print the following instructions.



Avoid contact with the hot computer. During operation, the computer becomes hot enough to burn the skin. Before you touch the computer, turn off the computer, disconnect power, and wait approximately 30 minutes for the computer to cool.

Replacement procedure

1. Turn over the computer so that the bottom cover is facing up.
2. Remove the bottom cover. See “Bottom cover” on page 97.
3. Remove an M.2 solid-state drive.

   Note: A thermal pad might cover the M.2 solid-state drive. To access the M.2 solid-state drive, peel off the thermal pad first.

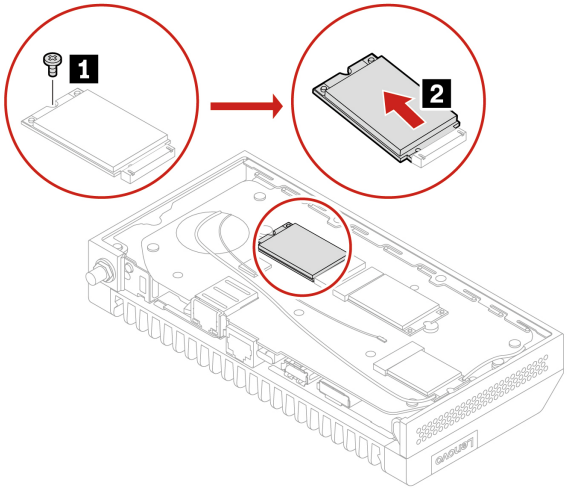

4. Install an M.2 solid-state drive. For more information about the corresponding slot for the M.2 solid-state drive, see “System board” on page 58. Cover the M.2 solid-state drive with a thermal pad if you have removed one.

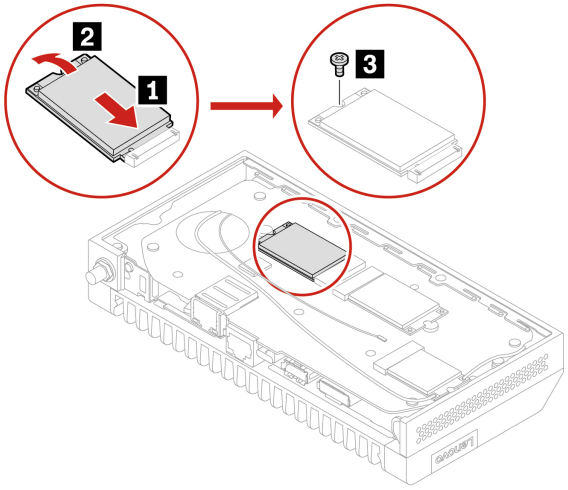

5. Reinstall all removed parts. Turn over the computer so that the bottom cover is facing down.
6. Reconnect the external cables and power adapter to the corresponding connectors on the computer, and then reconnect the power cord to the electrical outlet.

System board and coin-cell battery

Prerequisite

Before you start, read Chapter 1 “Important safety information” on page 1 and print the following instructions.



Avoid contact with the hot computer. During operation, the computer becomes hot enough to burn the skin. Before you touch the computer, turn off the computer, disconnect power, and wait approximately 30 minutes for the computer to cool.

Replacement procedure

1. Turn over the computer so that the bottom cover is facing up.
2. Remove the bottom cover. See “Bottom cover” on page 97.
3. Remove the M.2 solid-state drives. See “M.2 solid-state drives” on page 100.
4. Remove the Wi-Fi card. See “Wi-Fi card” on page 98.
5. Record the cable routing and cable connections, and then disconnect all cables from the system board. See “System board” on page 58.

6. Remove the system board.

   Note: Carefully handle the system board by its edges.

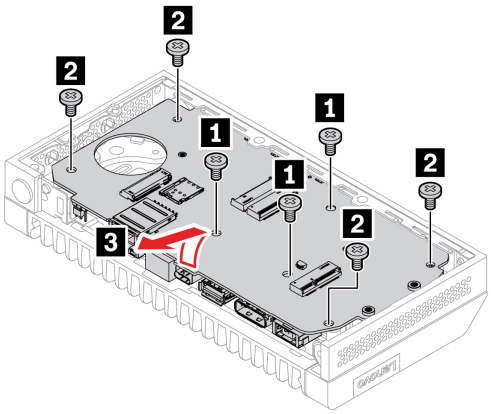

7. Turn over the system board so that the coin-cell battery is facing up.
8. Remove the coin-cell battery.

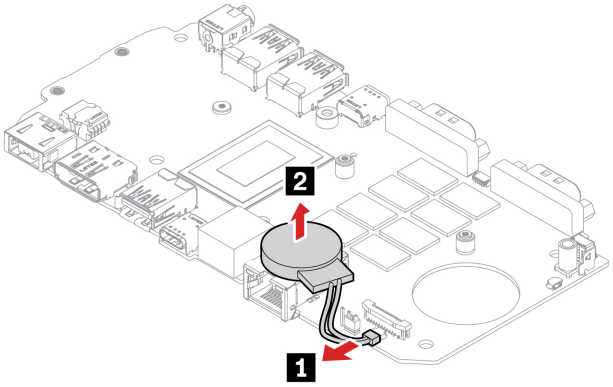

9. Install the new coin-cell battery on the new system board.

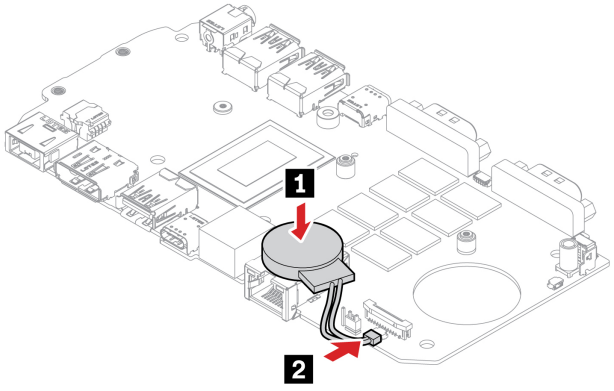

10. Turn over the system board so that the coin-cell battery is facing down.

11. Route the internal speaker cable and front antenna cable by the cable clip, and install the system board.

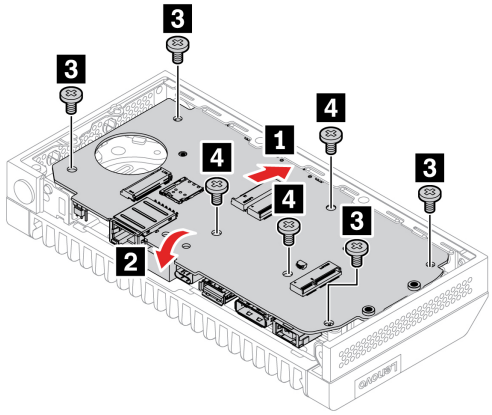

12. Reinstall all parts that you have removed one by one in the reversed sequence as you remove them. Refer to the information that you have noted down and the related topics in “Removing and installing hardware (fanless models)” on page 83.
13. Connect all cables to the new system board. See “System board” on page 58.
14. Reconnect the power adapter and all disconnected cables to the computer.
15. Turn over the computer so that the bottom cover is facing down.

Left cover and front antenna cable

Prerequisite

Before you start, read Chapter 1 “Important safety information” on page 1 and print the following instructions.



Avoid contact with the hot computer. During operation, the computer becomes hot enough to burn the skin. Before you touch the computer, turn off the computer, disconnect power, and wait approximately 30 minutes for the computer to cool.

Replacement procedure

1. Turn over the computer so that the bottom cover is facing up.
2. Remove the bottom cover. See “Bottom cover” on page 97.
3. Remove the M.2 solid-state drives. See “M.2 solid-state drives” on page 100.
4. Remove the Wi-Fi card. See “Wi-Fi card” on page 98.
5. Remove the system board. See “System board and coin-cell battery” on page 101.

6. Remove the left cover.

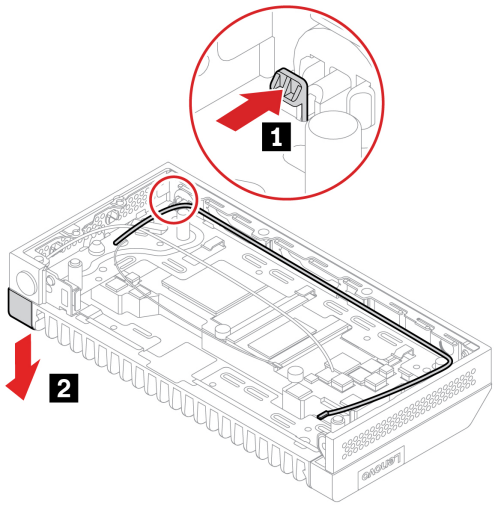

7. Remove the front antenna cable.

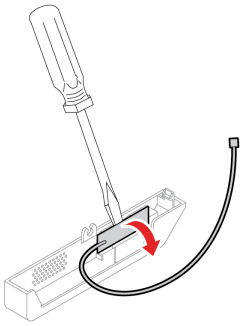

8. Install the front antenna cable.

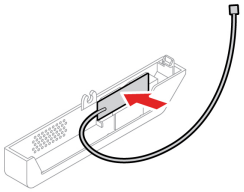

9. Route the front antenna cable by the cable clip, and install the left cover.

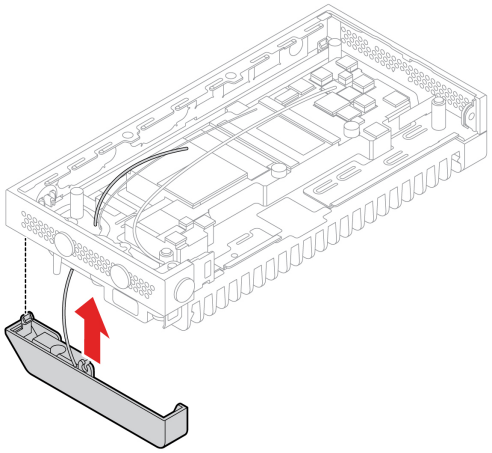

10. Reinstall all removed parts. Turn over the computer so that the bottom cover is facing down. Then, reconnect the power adapter and all disconnected cables to the computer.

Right cover

Prerequisite

Before you start, read Chapter 1 “Important safety information” on page 1 and print the following instructions.



Avoid contact with the hot computer. During operation, the computer becomes hot enough to burn the skin. Before you touch the computer, turn off the computer, disconnect power, and wait approximately 30 minutes for the computer to cool.

Replacement procedure

1. Turn over the computer so that the bottom cover is facing up.
2. Remove the bottom cover. See “Bottom cover” on page 97.
3. Remove the M.2 solid-state drives. See “M.2 solid-state drives” on page 100.
4. Remove the Wi-Fi card. See “Wi-Fi card” on page 98.
5. Remove the system board. See “System board and coin-cell battery” on page 101.

6. Remove the right cover.

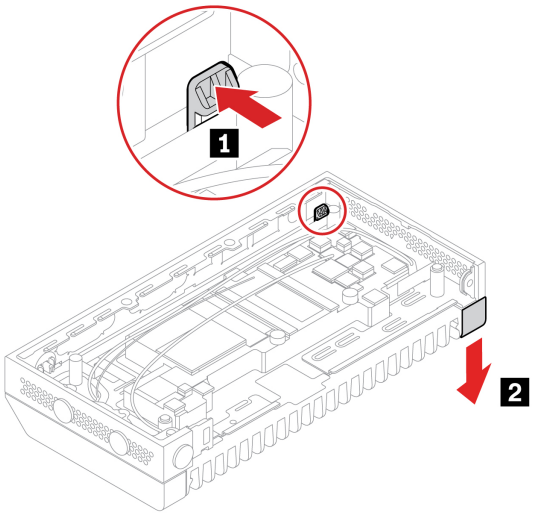

7. Install the right cover.

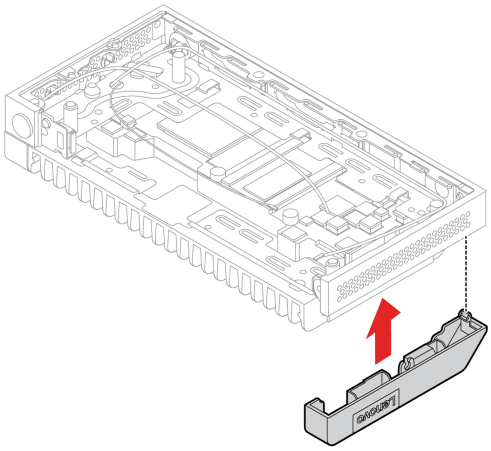

8. Reinstall all removed parts. Turn over the computer so that the bottom cover is facing down. Then, reconnect the power adapter and all disconnected cables to the computer.

Internal speaker

Prerequisite

Before you start, read Chapter 1 “Important safety information” on page 1 and print the following instructions.



Avoid contact with the hot computer. During operation, the computer becomes hot enough to burn the skin. Before you touch the computer, turn off the computer, disconnect power, and wait approximately 30 minutes for the computer to cool.

Replacement procedure

1. Turn over the computer so that the bottom cover is facing up.

2. Remove the bottom cover. See “Bottom cover” on page 97.
3. Remove the M.2 solid-state drives. See “M.2 solid-state drives” on page 100.
4. Remove the Wi-Fi card. See “Wi-Fi card” on page 98.
5. Remove the system board. See “System board and coin-cell battery” on page 101.
6. Remove the left cover. See “Left cover and front antenna cable” on page 103.
7. Turn over the computer so that the bottom cover is facing down.
8. Remove the internal speaker.

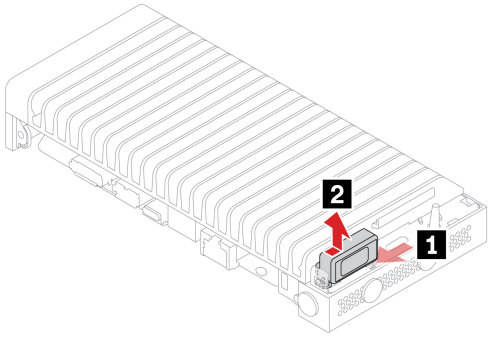

9. Thread the internal speaker cable through the hole used to hold the cable, and install the internal speaker.

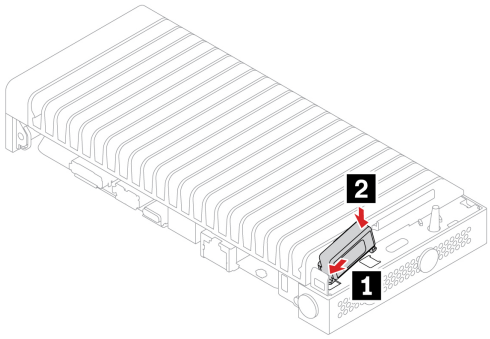

10. Reinstall all removed parts. Then, reconnect the power adapter and all disconnected cables to the computer.

Rear antenna cable

Prerequisite

Before you start, read Chapter 1 “Important safety information” on page 1 and print the following instructions.



Avoid contact with the hot computer. During operation, the computer becomes hot enough to burn the skin. Before you touch the computer, turn off the computer, disconnect power, and wait approximately 30 minutes for the computer to cool.

Replacement procedure

1. Remove the rear Wi-Fi antenna. See “Rear Wi-Fi antenna” on page 96.

2. Turn over the computer so that the bottom cover is facing up.
3. Remove the bottom cover. See “Bottom cover” on page 97.
4. Remove the M.2 solid-state drives. See “M.2 solid-state drives” on page 100.
5. Remove the Wi-Fi card. See “Wi-Fi card” on page 98.
6. Remove the system board. See “System board and coin-cell battery” on page 101.
7. Remove the rear antenna cable.

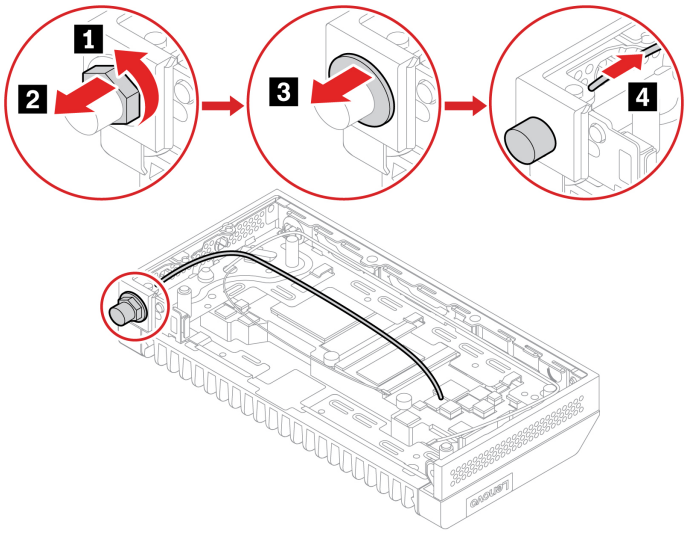

8. Install the rear antenna cable.

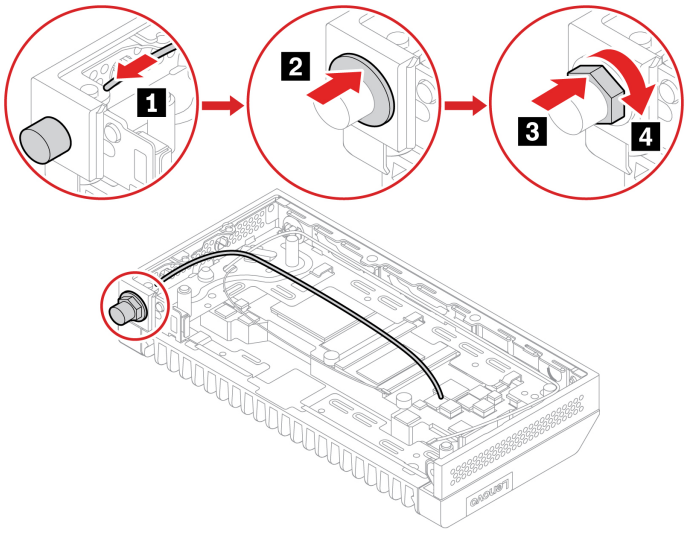

9. Reinstall all removed parts. Turn over the computer so that the bottom cover is facing down. Then, reconnect the power adapter and all disconnected cables to the computer.

Heat sink

Prerequisite

Before you start, read Chapter 1 “Important safety information” on page 1 and print the following instructions.

Avoid contact with the hot computer. During operation, the computer becomes hot enough to burn the skin. Before you touch the computer, turn off the computer, disconnect power, and wait approximately 30 minutes for the computer to cool.

Replacement procedure

1. Turn over the computer so that the bottom cover is facing up.
2. Remove the bottom cover. See “Bottom cover” on page 97.
3. Remove the M.2 solid-state drives. See “M.2 solid-state drives” on page 100.
4. Remove the Wi-Fi card. See “Wi-Fi card” on page 98.
5. Remove the system board. See “System board and coin-cell battery” on page 101.
6. Remove the left cover. See “Left cover and front antenna cable” on page 103.
7. Remove the right cover. See “Right cover” on page 105.
8. Remove the internal speaker. See “Internal speaker” on page 106.
9. Remove the rear antenna cable. See “Rear antenna cable” on page 107.
10. Remove the heat sink.

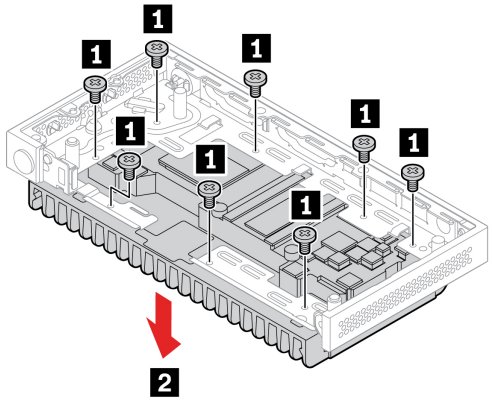

11. Install the heat sink.

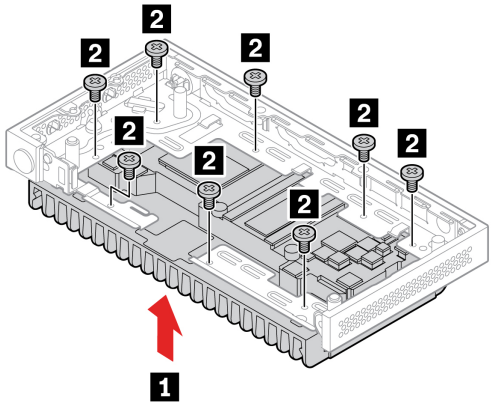

12. Reinstall all removed parts. Turn over the computer so that the bottom cover is facing down. Then, reconnect the power adapter and all disconnected cables to the computer.

Notices and trademarks

Notices

Lenovo may not offer the products, services, or features discussed in this document in all countries. Consult your local Lenovo representative for information on the products and services currently available in your area. Any reference to a Lenovo product, program, or service is not intended to state or imply that only that Lenovo product, program, or service may be used. Any functionally equivalent product, program, or service that does not infringe any Lenovo intellectual property right may be used instead. However, it is the user's responsibility to evaluate and verify the operation of any other product, program, or service.

Lenovo may have patents or pending patent programs covering subject matter described in this document. The furnishing of this document does not give you any license to these patents. You can send license inquiries, in writing, to:

Lenovo (United States), Inc.
8001 Development Drive
Morrisville, NC 27560
U.S.A.
Attention: Lenovo Director of Licensing

LENOVO PROVIDES THIS PUBLICATION "AS IS" WITHOUT WARRANTY OF ANY KIND, EITHER EXPRESS OR IMPLIED, INCLUDING, BUT NOT LIMITED TO, THE IMPLIED WARRANTIES OF NON-INFRINGEMENT, MERCHANTABILITY OR FITNESS FOR A PARTICULAR PURPOSE. Some jurisdictions do not allow disclaimer of express or implied warranties in certain transactions, therefore, this statement may not apply to you.

Changes are made periodically to the information herein; these changes will be incorporated in new editions of the publication. To provide better service, Lenovo reserves the right to improve and/or modify the products and software programs described in the manuals included with your computer, and the content of the manual, at any time without additional notice.

The software interface and function and hardware configuration described in the manuals included with your computer might not match exactly the actual configuration of the computer that you purchase. For the configuration of the product, refer to the related contract (if any) or product packing list, or consult the distributor for the product sales. Lenovo may use or distribute any of the information you supply in any way it believes appropriate without incurring any obligation to you.

The products described in this document are not intended for use in implantation or other life support applications where malfunction may result in injury or death to persons. The information contained in this document does not affect or change Lenovo product specifications or warranties. Nothing in this document shall operate as an express or implied license or indemnity under the intellectual property rights of Lenovo or third parties. All information contained in this document was obtained in specific environments and is presented as an illustration. The result obtained in other operating environments may vary.

Lenovo may use or distribute any of the information you supply in any way it believes appropriate without incurring any obligation to you.

Any references in this publication to non-Lenovo Web sites are provided for convenience only and do not in any manner serve as an endorsement of those Web sites. The materials at those Web sites are not part of the materials for this Lenovo product, and use of those Web sites is at your own risk.

Any performance data contained herein was determined in a controlled environment. Therefore, the result obtained in other operating environments may vary significantly. Some measurements may have been made

© Copyright Lenovo 2020

on development-level systems and there is no guarantee that these measurements will be the same on generally available systems. Furthermore, some measurements may have been estimated through extrapolation. Actual results may vary. Users of this document should verify the applicable data for their specific environment.

This document is copyrighted by Lenovo and is not covered by any open source license, including any Linux agreement(s) which may accompany software included with this product. Lenovo may update this document at any time without notice.

For the latest information or any questions or comments, contact or visit the Lenovo Web site:
https://support.lenovo.com

Trademarks

LENOVO, LENOVO logo, THINKCENTRE, and THINKCENTRE logo are trademarks of Lenovo. Intel and Optane are trademarks of Intel Corporation or its subsidiaries in the U.S. and/or other countries. Microsoft and Windows are trademarks of the Microsoft group of companies. DisplayPort and VESA are trademarks of the Video Electronics Standards Association. Wi-Fi, is a registered trademark of Wi-Fi Alliance. USB-C is a trademark of USB Implementers Forum. All other trademarks are the property of their respective owners. © 2019 Lenovo.


Lenovo