KHIAF 87700

12NC: 859991548660

GTIN (EAN) code: 8003437834776

KitchenAid

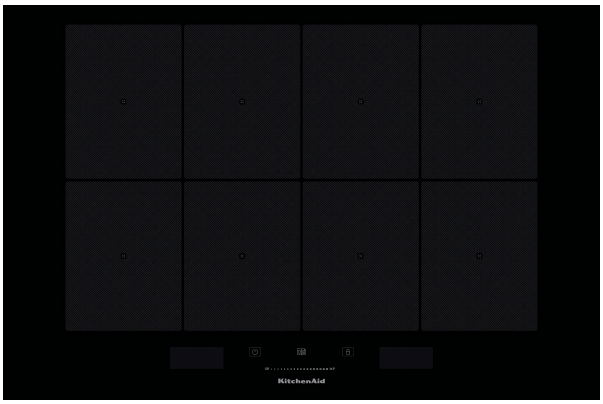

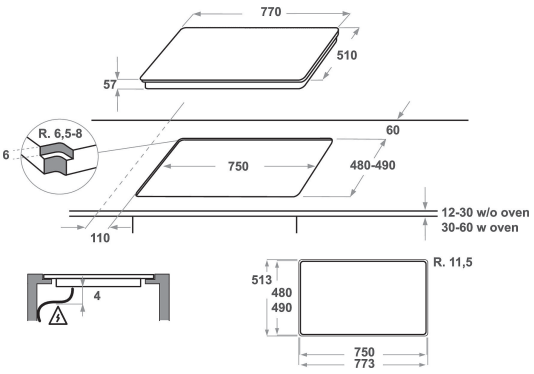

MAIN FEATURES

Product group	Hob
Construction type	Built-in
Type of control	Electronic
Type of control settings	-
Number of gas burners	0
Number of electric cooking zones	4
Number of electric plates	0
Number of radiant plates	0
Number of halogen plates	0
Number of induction plates	8
Number of electric warming zones	0
Location of control panel	Front
Basic surface material	Glass Ixellium
Main colour of product	Black
Electrical connection rating (W)	7400
Gas connection rating (W)	0
Current (A)	32,2
Voltage (V)	230
Frequency (Hz)	50/60
Length of Electrical Supply Cord (cm)	150
Plug type	No
Gas connection	N/A
Width of the product	770
Height of the product	57
Depth of the product	510
Minimum niche height	30
Minimum niche width	750
Niche depth	480
Net weight (kg)	15.1
Automatic programmes	Yes

TECHNICAL FEATURES

Power on indicator	Yes
Number of indicators	6
Type of regulation	Inductor
Type of lid	Without
Residual heat indicator	Separate
Main on/off switch	Yes
Safety device	-
Timer	Yes

PERFORMANCES

Energy input	Electric