# DS-LEDUPS Series

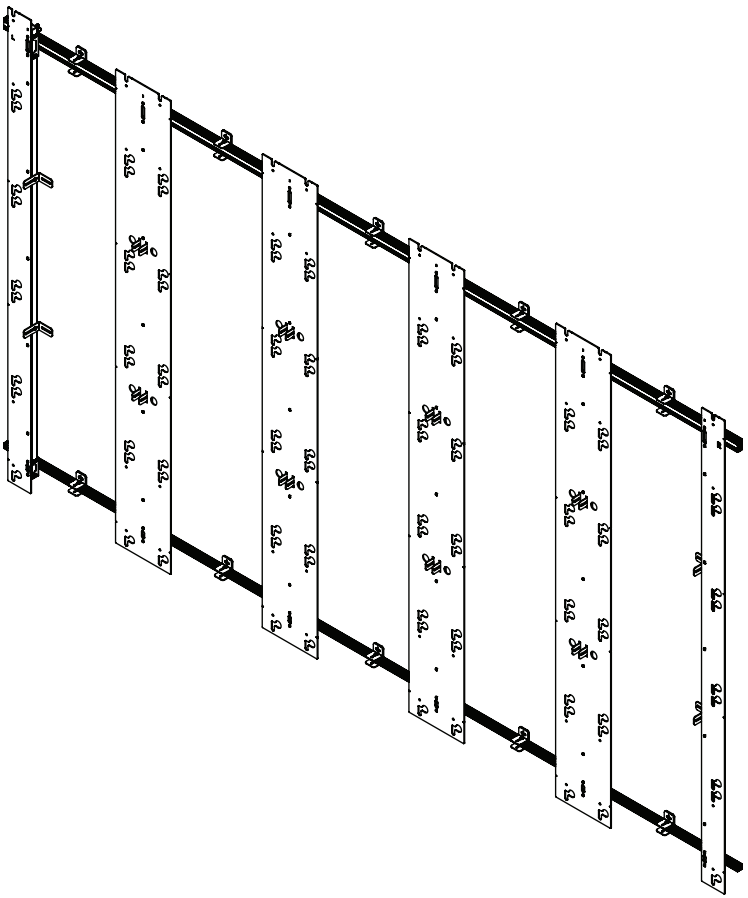

ENG

*Actual configuration may vary



2020-03-23 #:146-9048-3 (2020-06-15)

## ⚠ WARNING

ENG - This product is designed to be installed on plywood walls. Hardware is included for plywood installation. This product is designed to be installed on flat, unobstructed, vertical walls. Do not install on curved or angled walls. Before installing make sure the supporting surface will support the combined load of the equipment and hardware. Screws must be tightly secured. Do not overtighten screws or damage can occur and product may fail. Never exceed the Maximum Load Capacity. Always use an assistant or mechanical lifting equipment to safely lift and position equipment. This product is intended for indoor use only. Use of this product outdoors could lead to product failure or personal injury. Be careful not to pinch fingers when operating the mount. For support please call customer care at 1-800-865-2112.

ENG Symbols



ENG **WARNING**

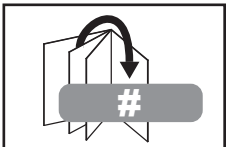


ENG Skip to step.



ENG Wear anti-static gloves.

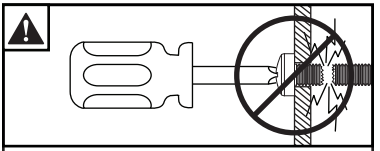

ENG Do not overtighten screws.

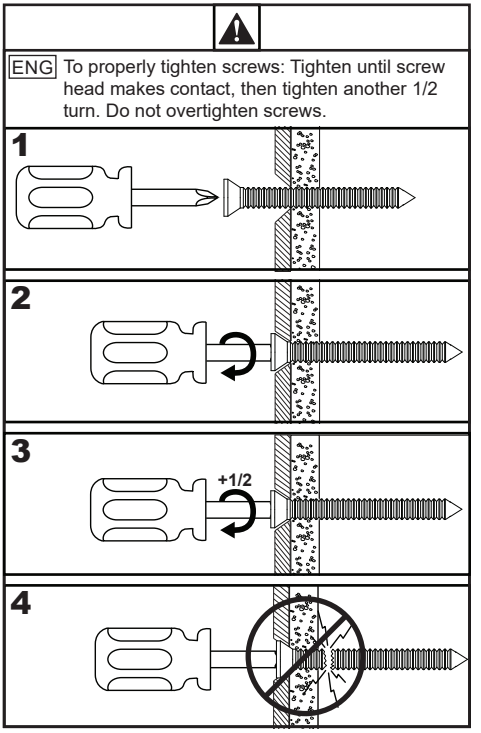

ENG To properly tighten screws: Tighten until screw head makes contact, then tighten another 1/2 turn. Do not overtighten screws.



ENG Tools Needed for Assembly.

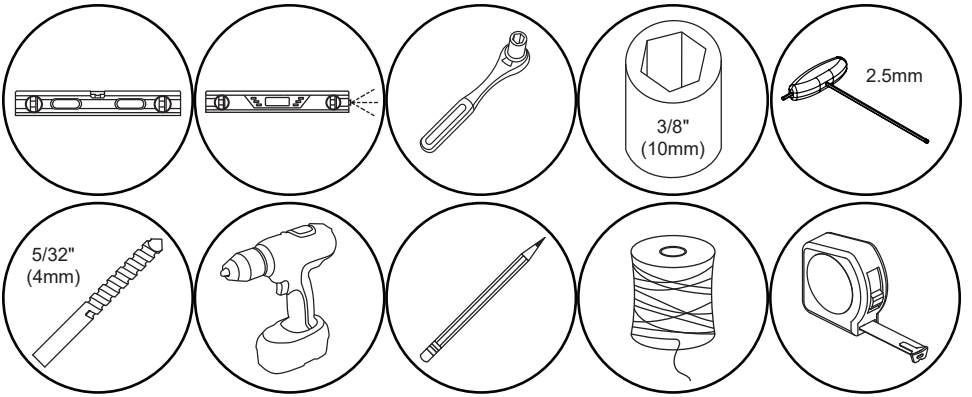

ENG This page intentionally left blank.

ENG Parts (Before beginning, make sure you have all parts shown below).

## Parts List

| | Description |
|---|---|
| A | left column |
| B | right column |
| C | inside column |
| D | top horizontal asy |
| E | bottom horizontal asy |
| F | top left horizontal asy |
| G | top right horizontal asy |
| H | bottom left horizontal asy |
| I | bottom right horizontal asy |
| J | horizontal spacer |
| K | vertical spacer |
| L | extrusion connector |
| M | wall plate shim |
| N | M5 x 8mm |
| O | M5 x 5mm set screw |
| P | M10 x 20mm |
| Q | #14 x 1.75" wood screw |
| R | 3mm allen wrench two-tip |
| S | 6mm allen wrench |

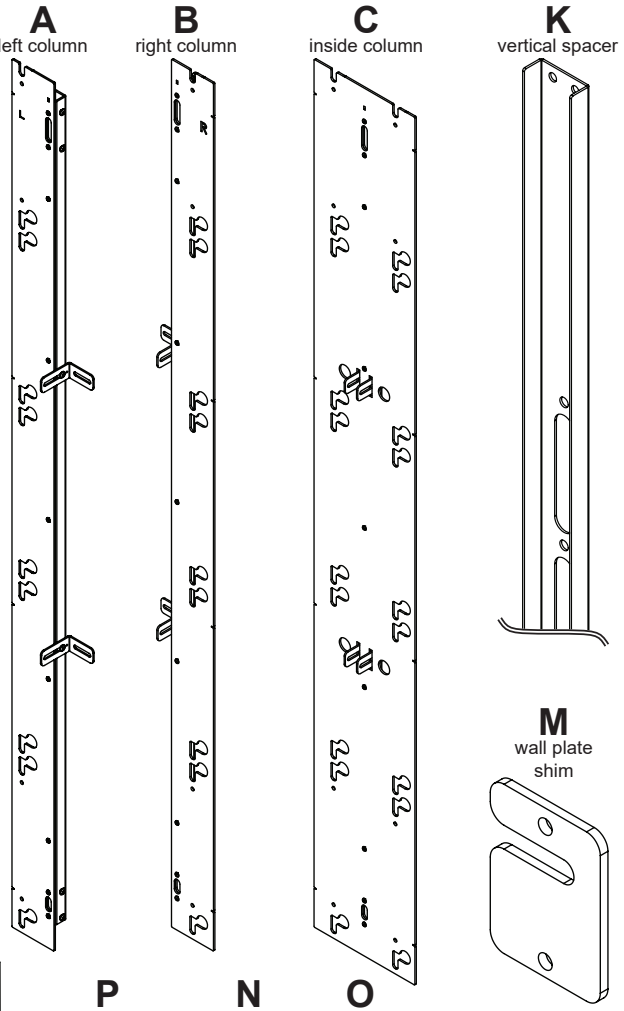

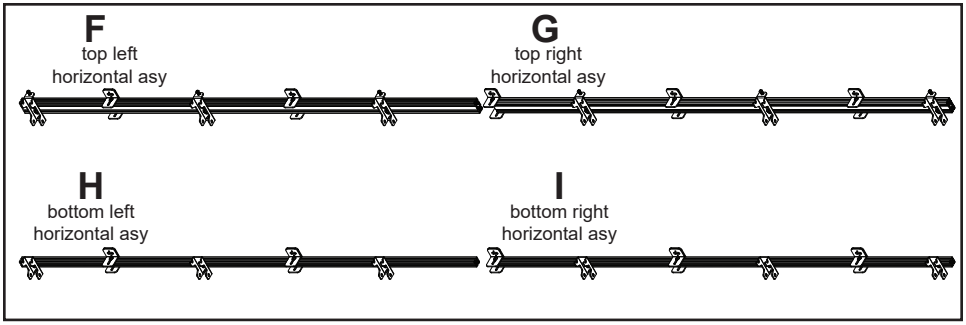
F
top left
horizontal asy
G
top right
horizontal asy
H
bottom left
horizontal asy
I
bottom right
horizontal asy

## 1-1

ENG Optional: If connecting two top horizontal extrusions, first remove inner hook-on brackets.

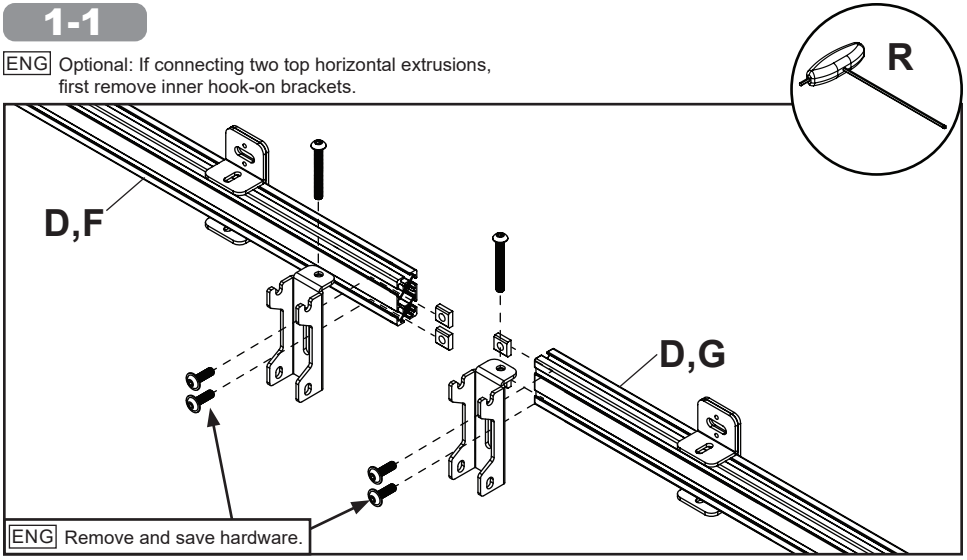


## 1-2

ENG Use extrusion connectors to connect top horizontal extrusions.

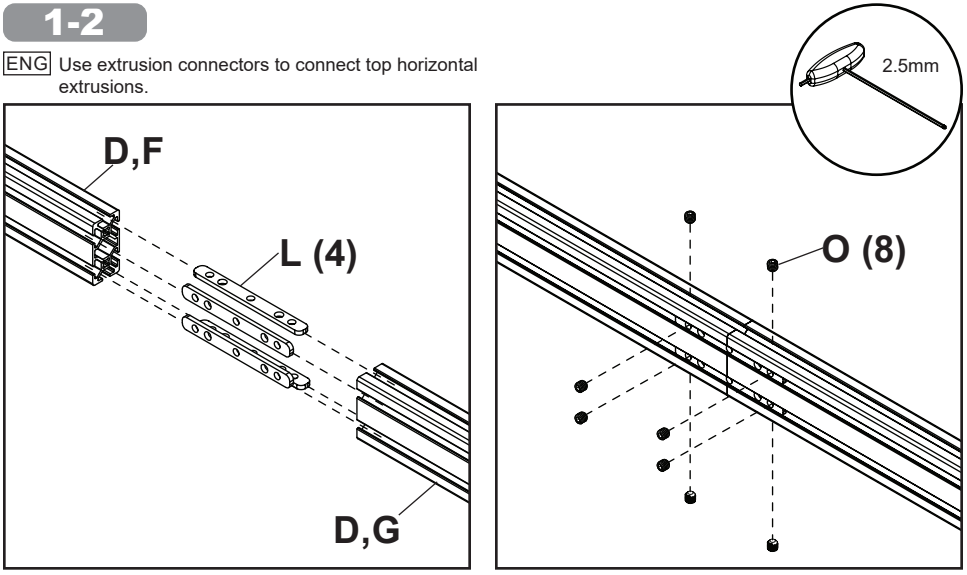

## 1-3

ENG Replace one hook-on bracket in between connected extrusions.

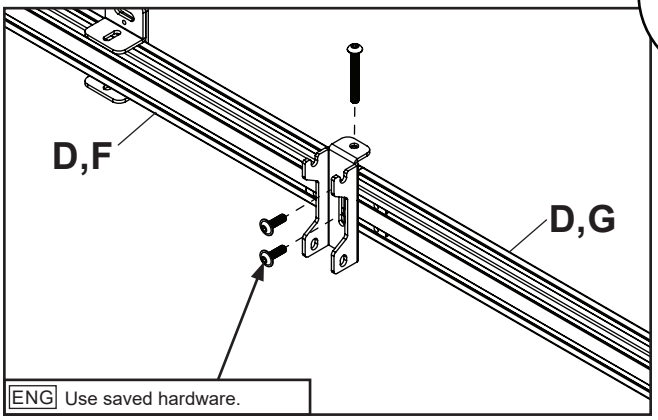


## 2-1

ENG Optional: If connecting two bottom horizontal extrusions, first remove inner hook-on brackets

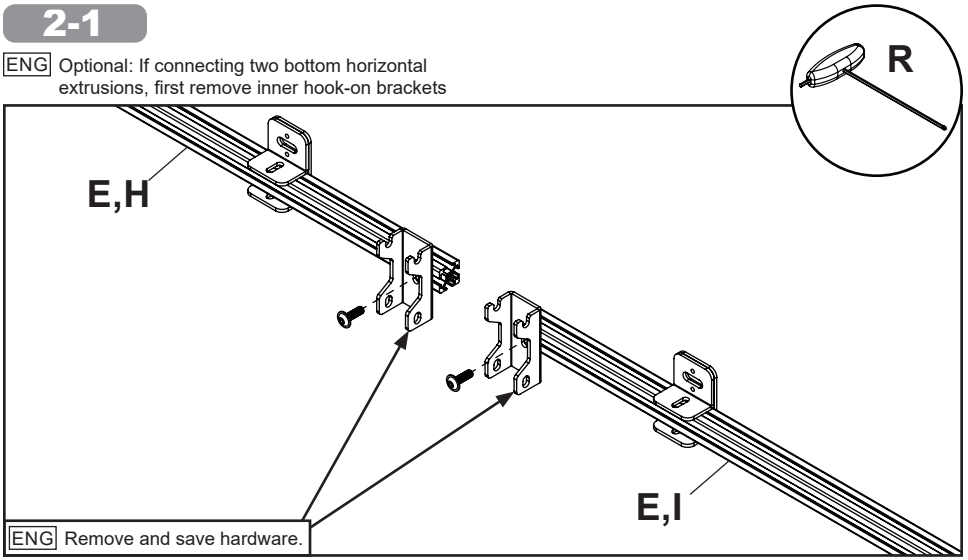

## 2-2

ENG Use extrusion connectors to connect bottom horizontal extrusions.

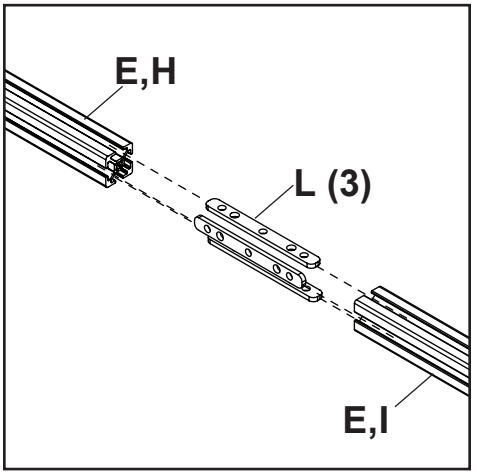


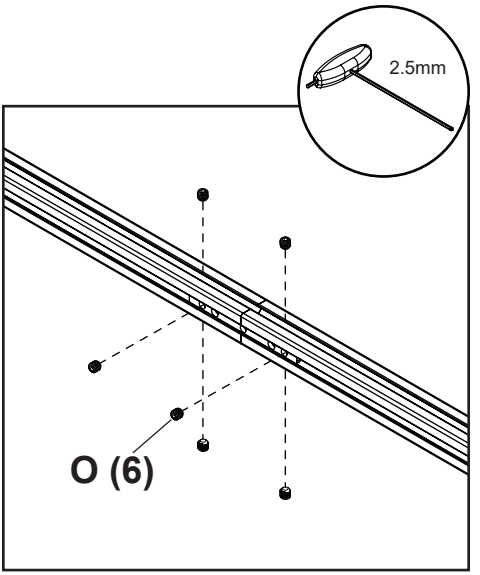


## 2-3

ENG Replace one hook-on bracket in between connected extrusions.

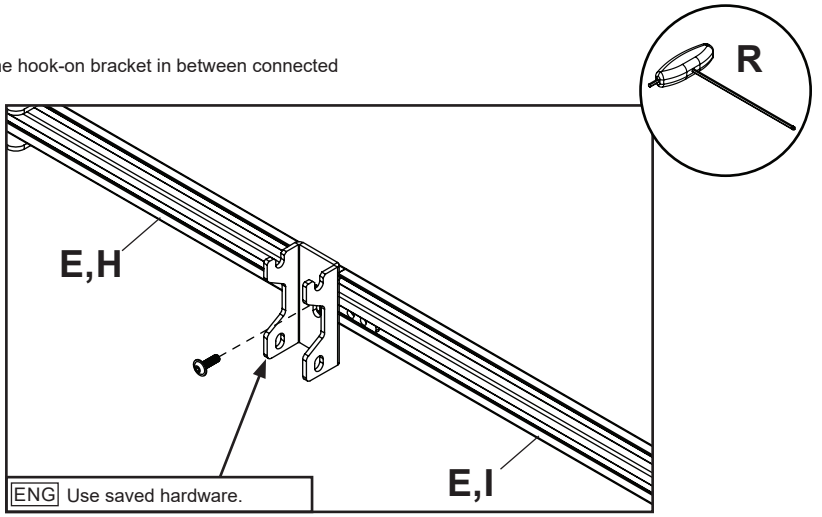

## 3

### ⚠ WARNING

ENG - When installing Peerless wall mounts on a wood stud wall covered with plywood, verify that the wood studs are a minimum of 2" x 4" nominal size and plywood is a minimum Grade BC, 1/2" (13 mm) thick. Plywood may be covered by gypsum board (drywall) up to 5/8" thick.

## 3-1

ENG Use a laser level to keep mounting holes level.

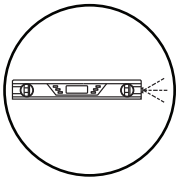

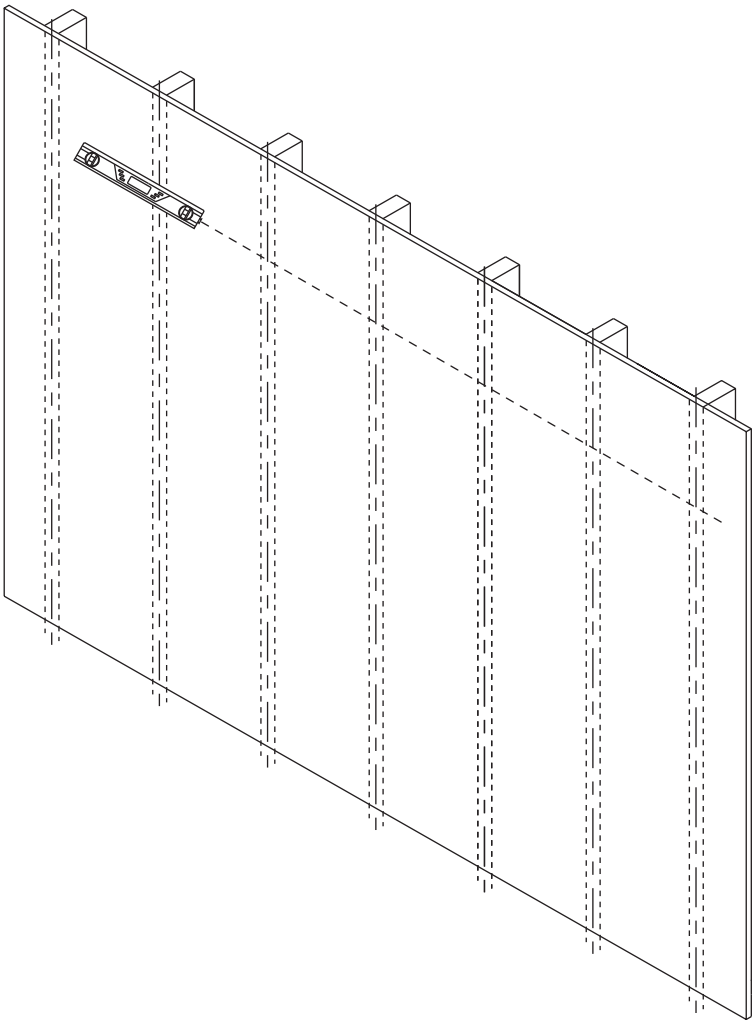

## 3-2

ENG Level top horizontal extrusion and mark mounting holes on plywood (must be minimum Grade BC, 1/2" (13mm) thick.)

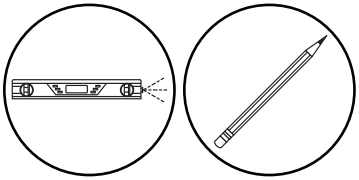

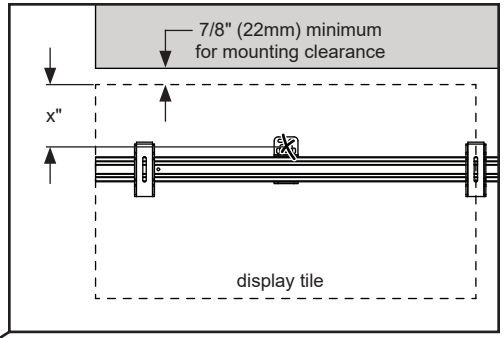


| Video Wall Rows | Dimension x" |
|---|---|
| 1 | 2.80" |
| 2 | 2.87" |
| 3 | 2.94" |
| 4 | 2.63" |
| 5 | 2.64" |
| 6 | 2.71" |
| 7 | 2.96" |
| 8 | 3.25" |

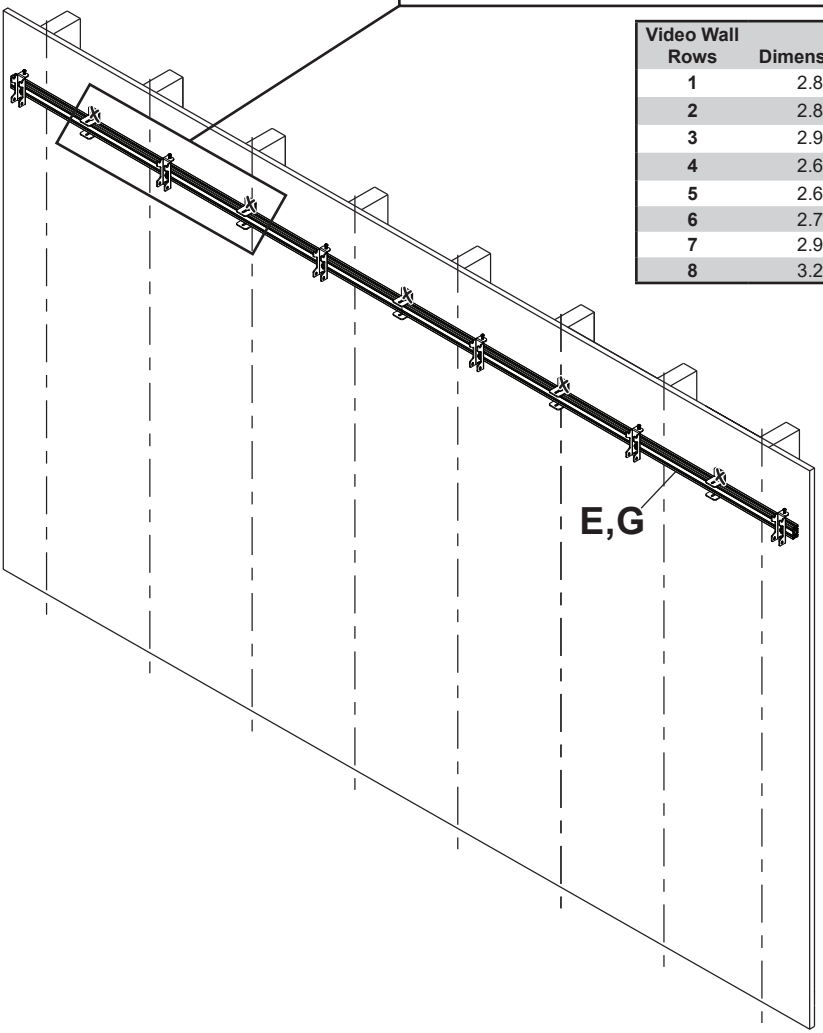

## 3-3

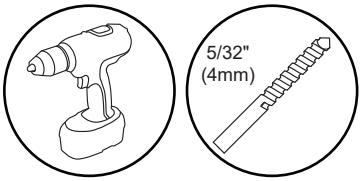


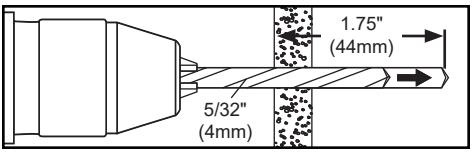


ENG Drill mounting holes into supporting surface (1.75" (44mm) minimum depth required).

## 3-4

ENG Level extrusion. Install using wood screws provided.

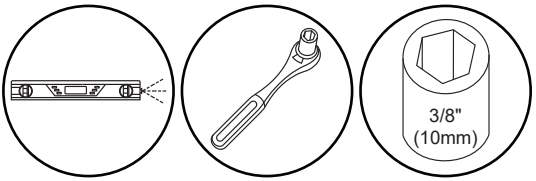


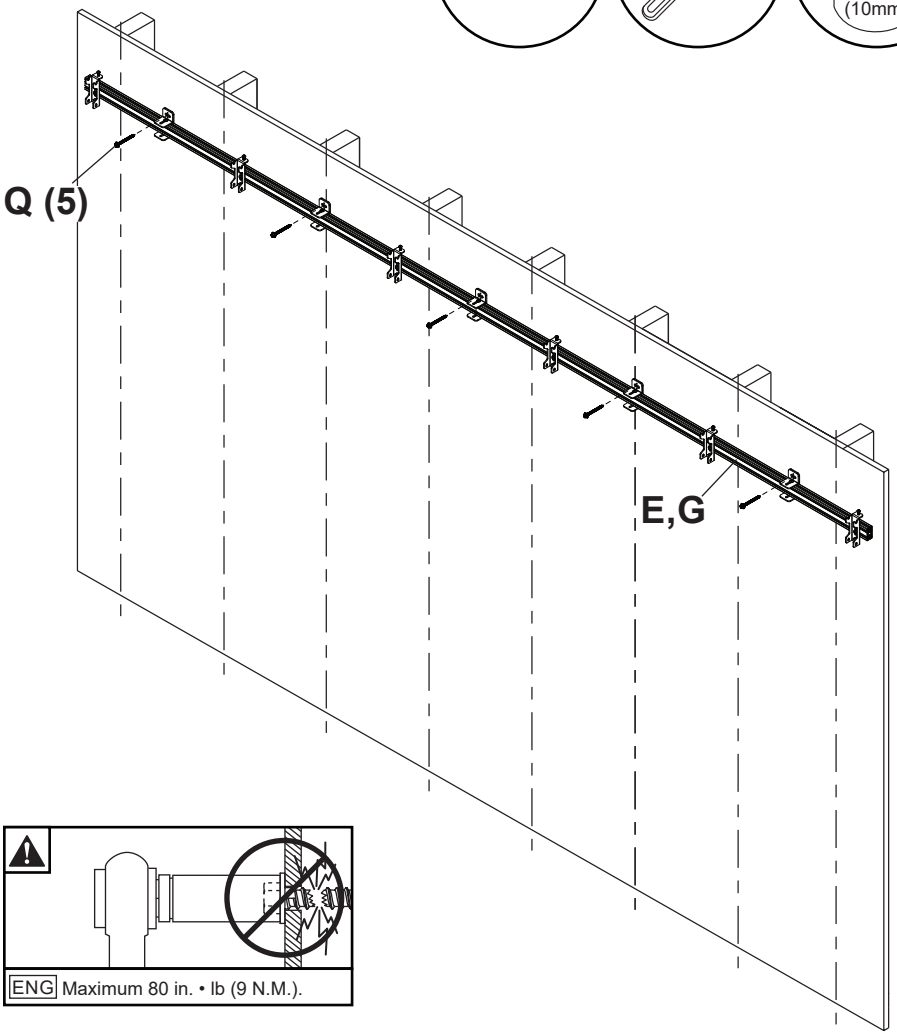




ENG Maximum 80 in. • lb (9 N.M.).

## 3-5

ENG Secure vertical spacers to the wall flush with the horizontal extrusion.

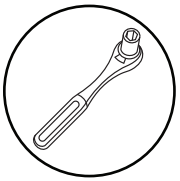

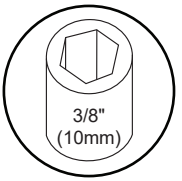


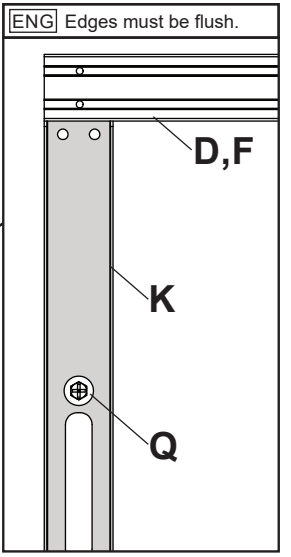


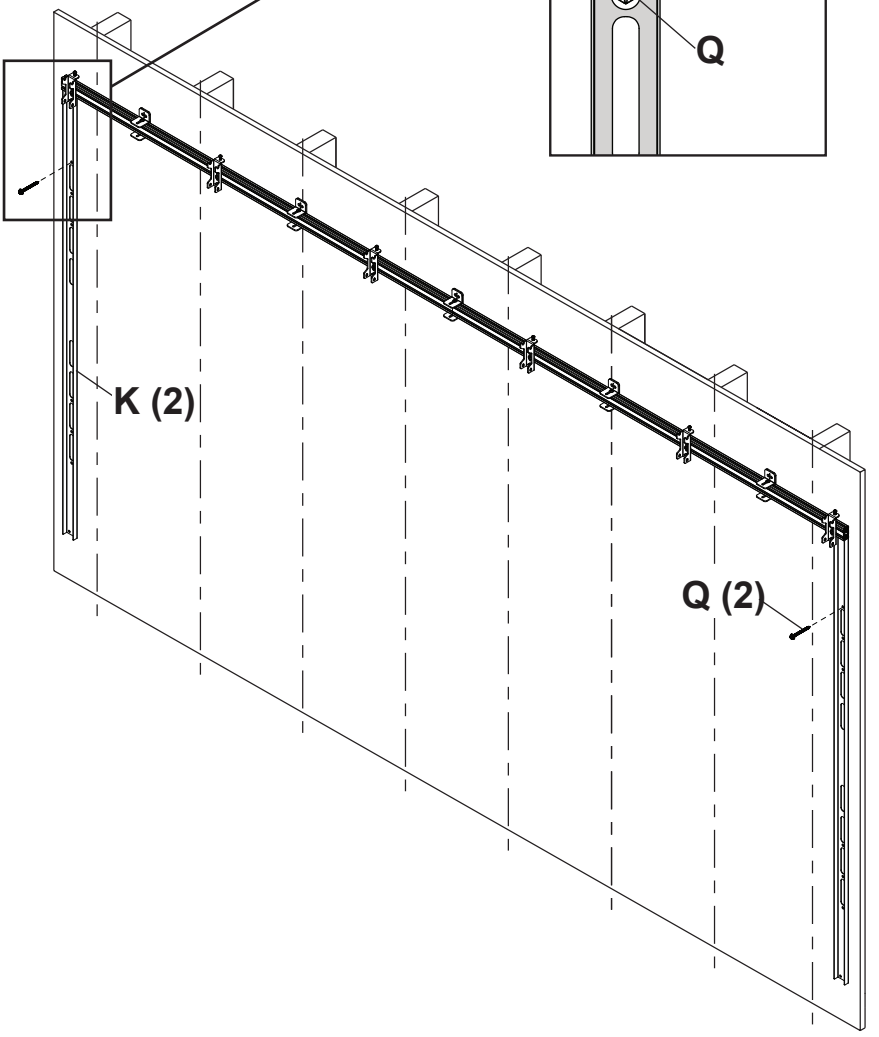

## 3-6

ENG Use third vertical spacer to align bottom horizontal extrusion flush with vertical spacer, then mark mounting holes on plywood (must be minimum Grade BC, 1/2" (13mm) thick.)

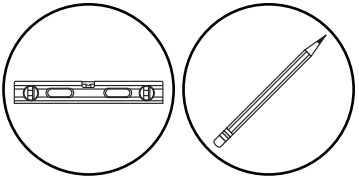

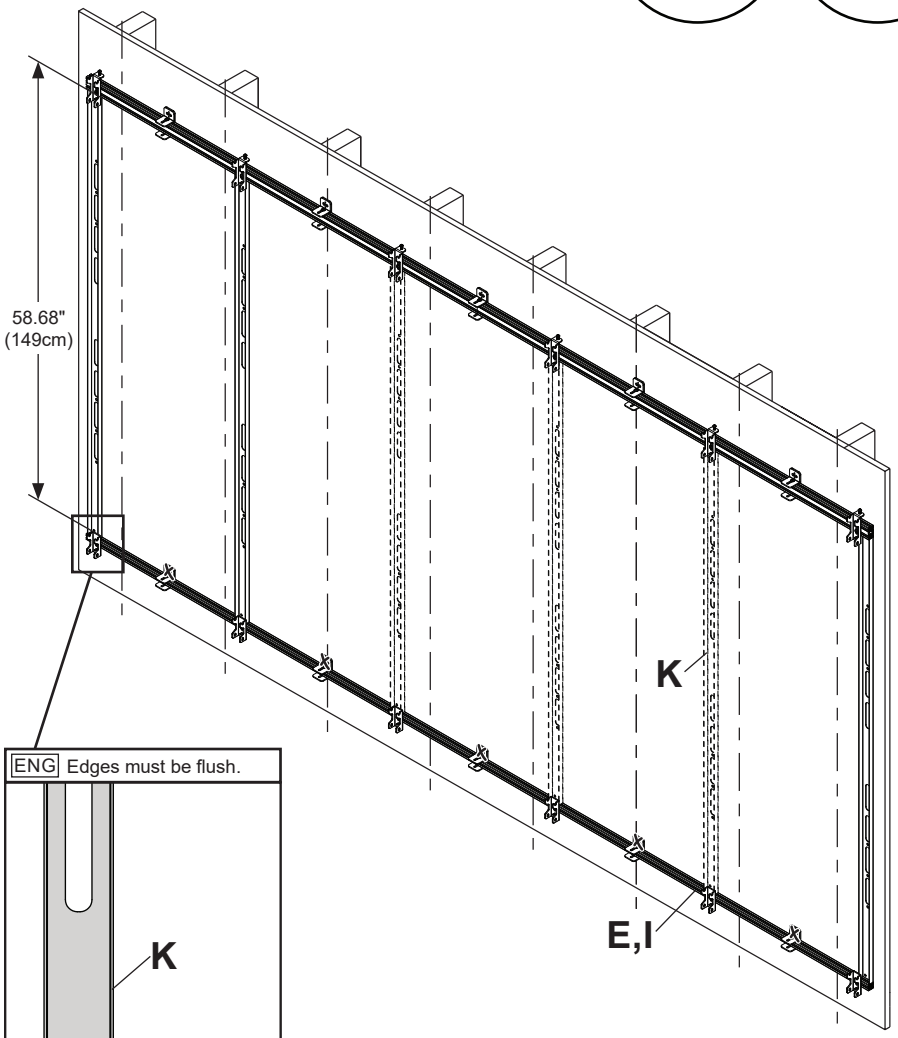

## 3-7

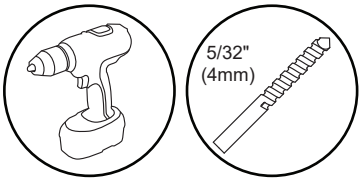


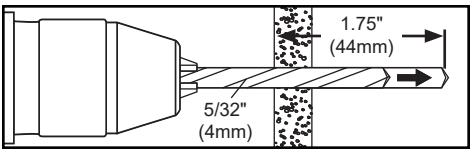


ENG Drill mounting holes into supporting surface (1.75" (44mm) minimum depth required).

## 3-8

ENG Use third vertical spacer to align bottom horizontal extrusion flush with vertical spacer, then install using wood screws provided.




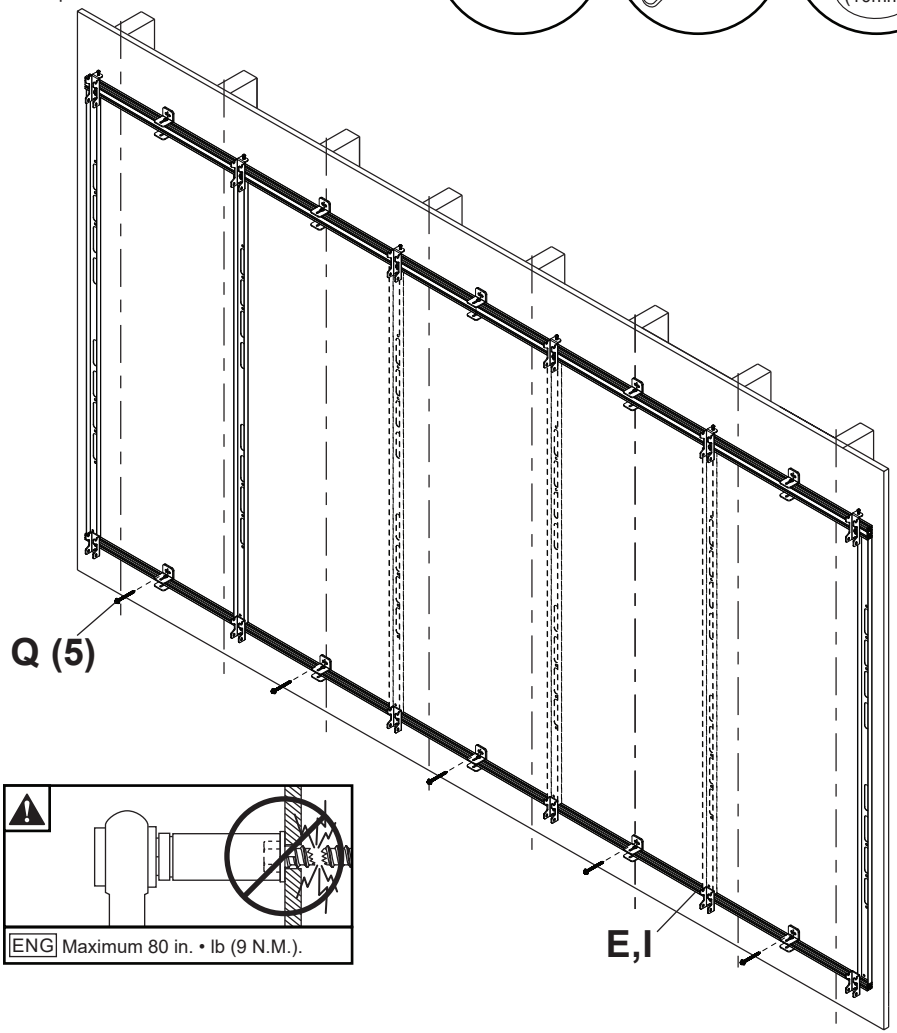




ENG Maximum 80 in. • lb (9 N.M.).

## 3-9

ENG Remove vertical spacers.

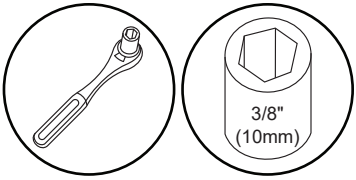


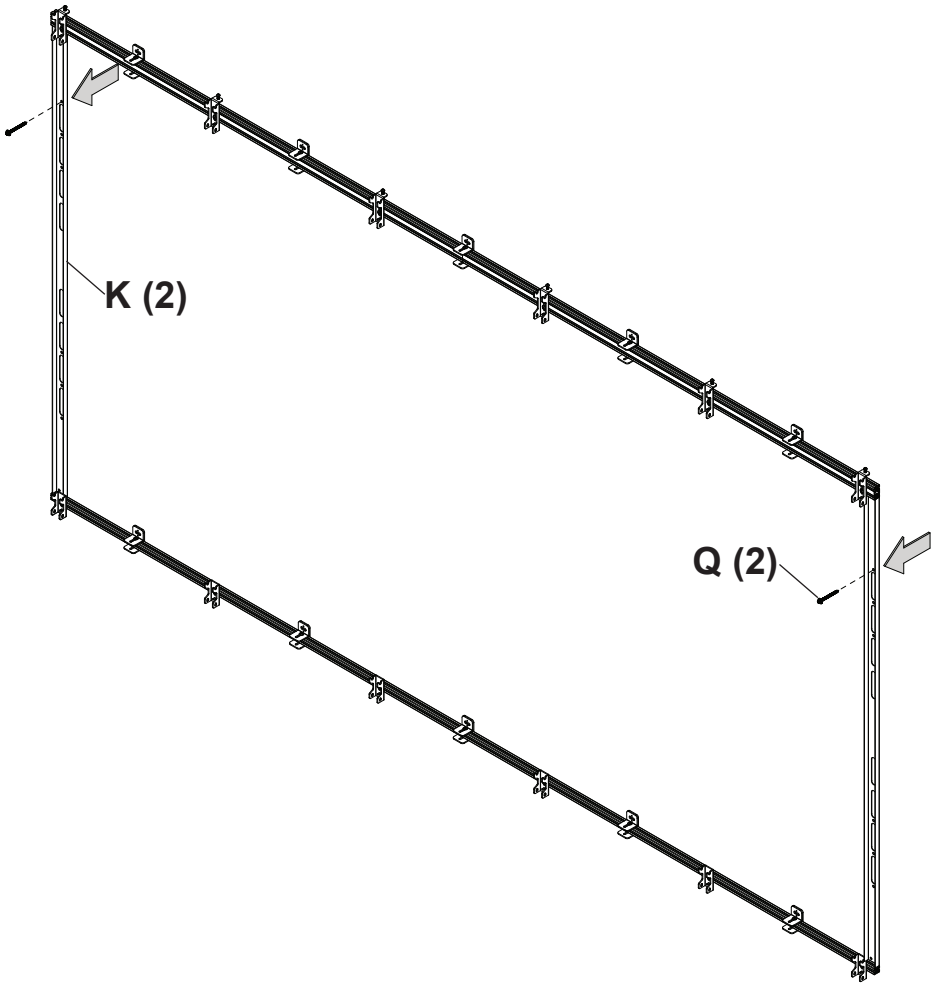

# 4-1

ENG Hook on and secure outer vertical columns. "L" and "R" markings designate left and right column.

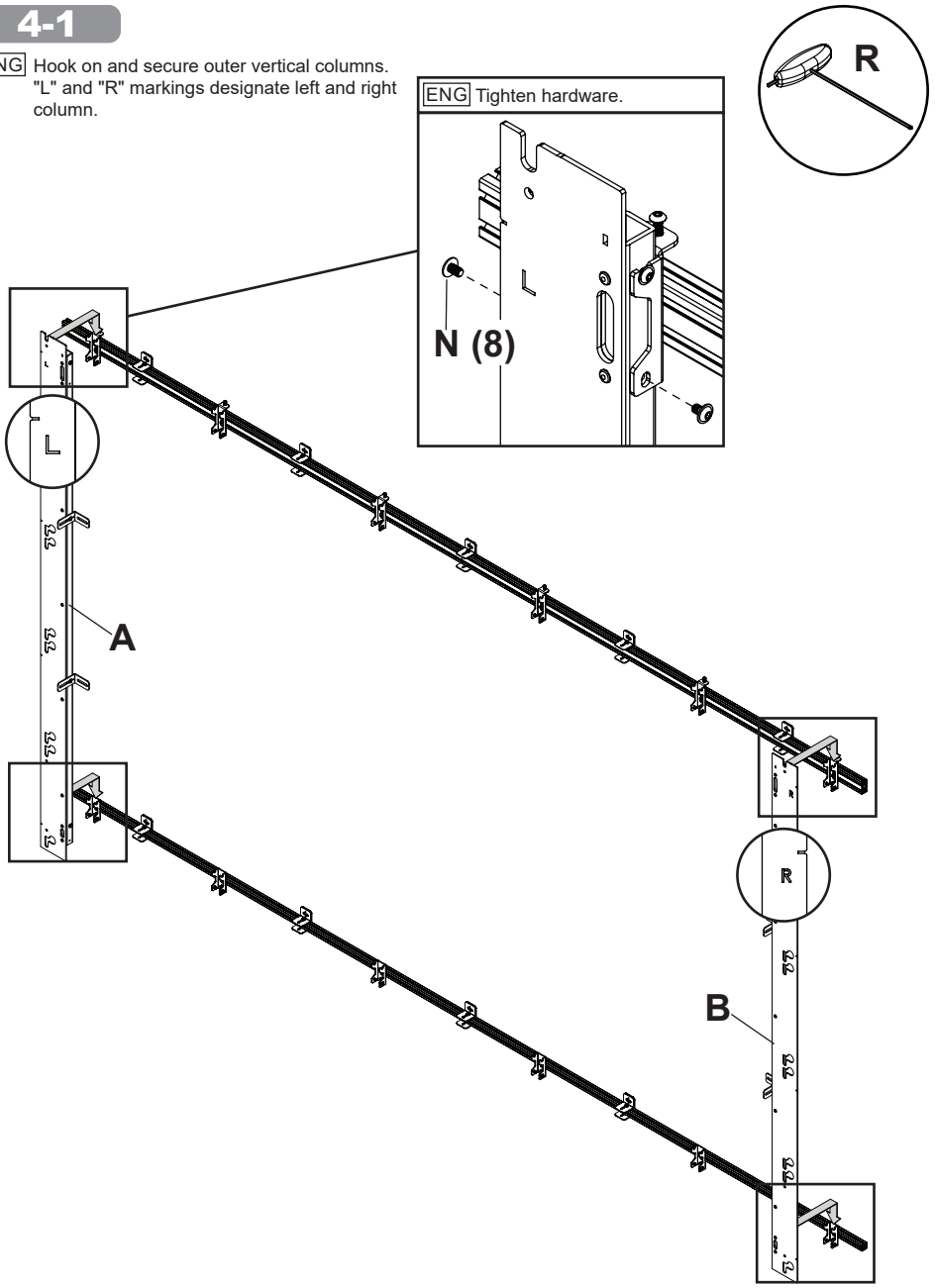

## 4-2

ENG Hook on and secure all inside vertical columns.

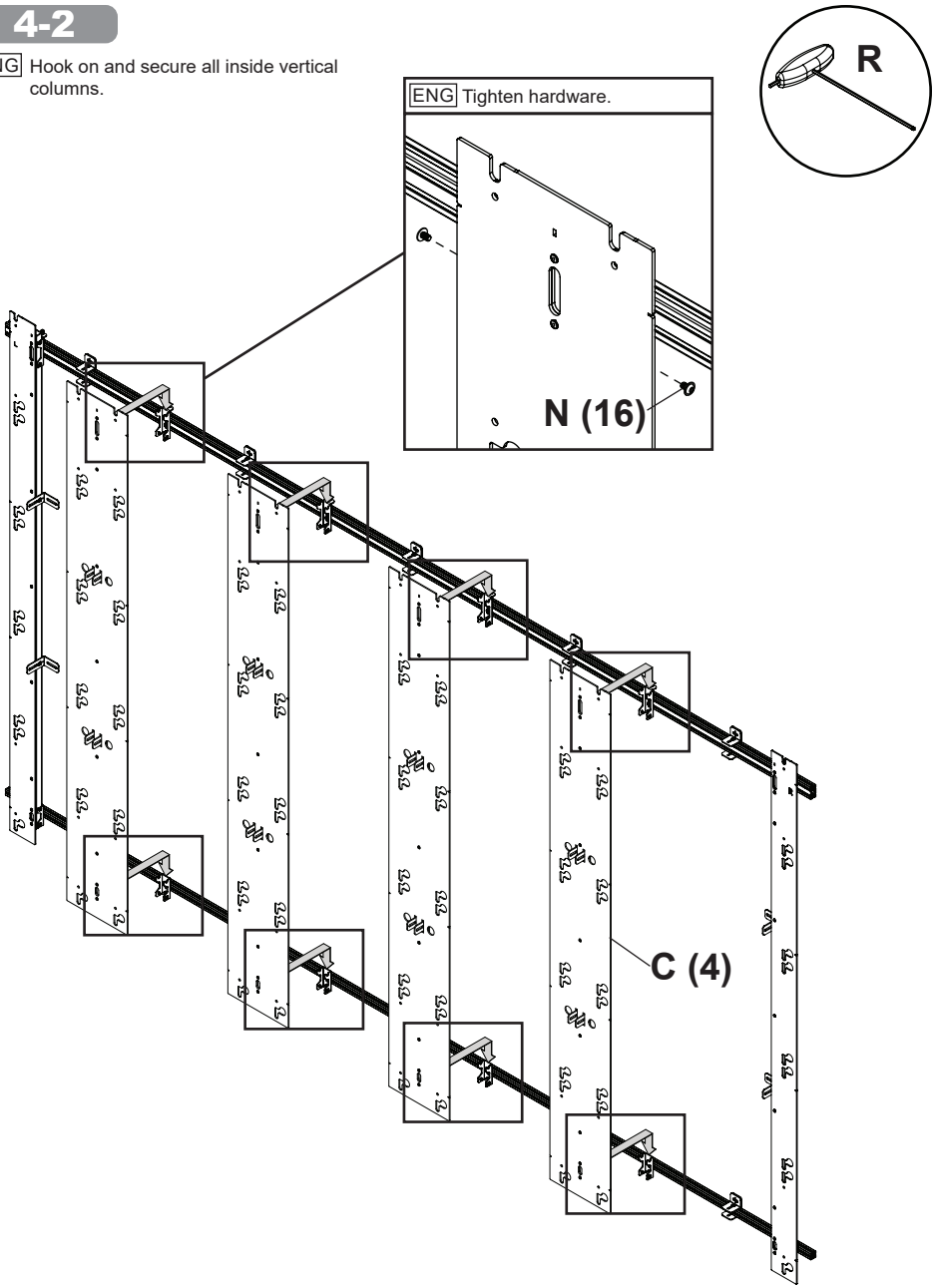

## 5-1

ENG Loosen hardware on vertical columns.

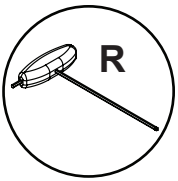

## 5-2

ENG Plumb and level outer columns, then tighten hardware. Tighten hardware on four corner wall plates.

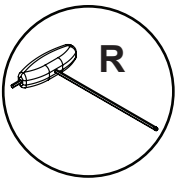


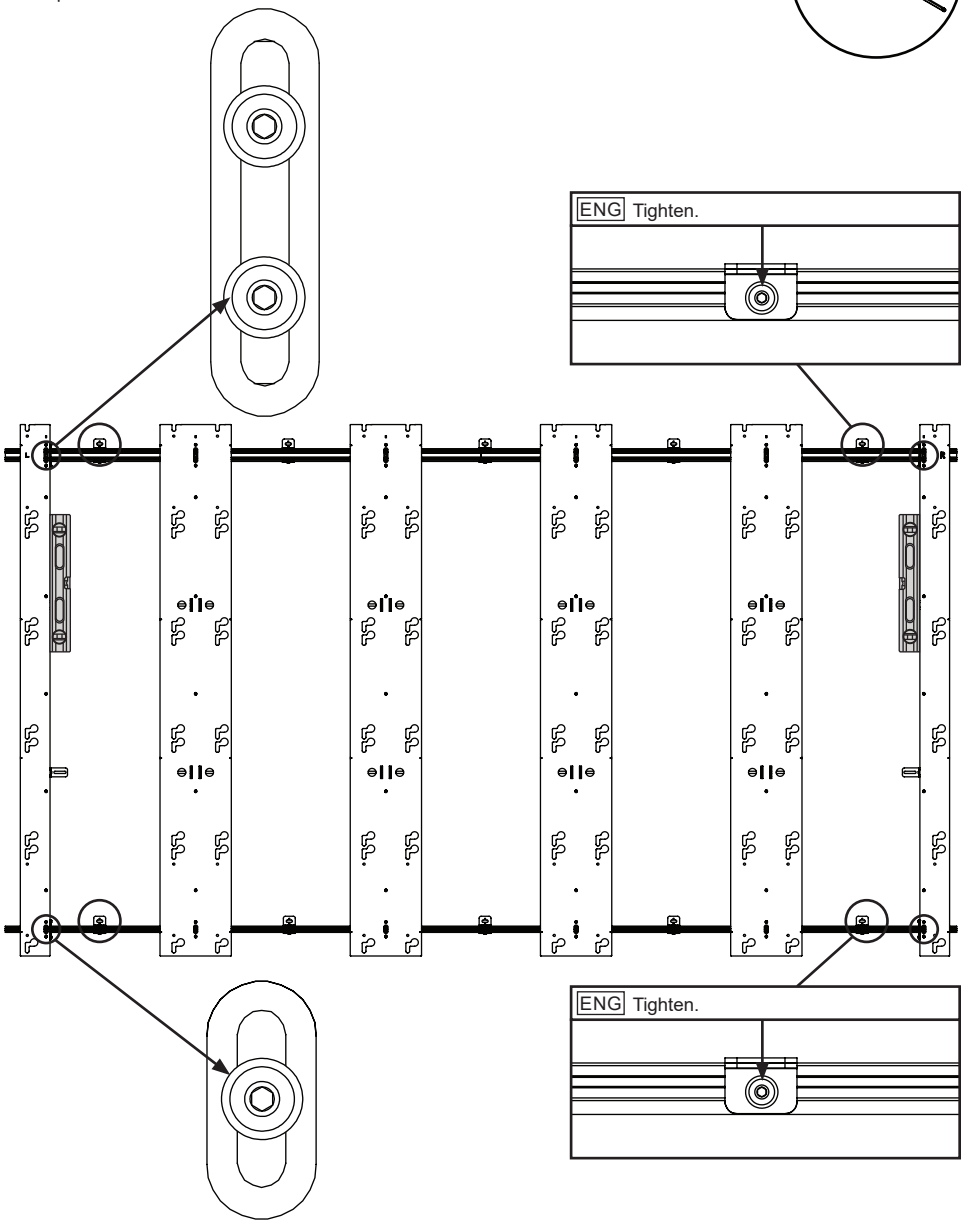

## 5-3

ENG Tie a string between top slots on outer columns in order to level the depth of each vertical column.

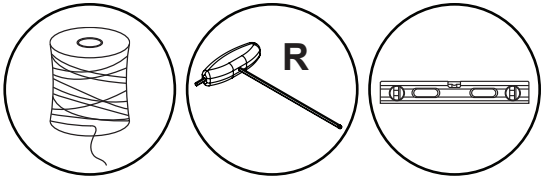


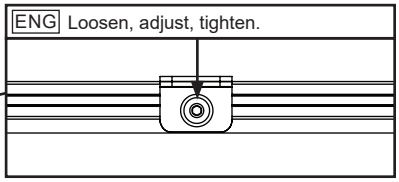




ENG Optional leveling for bowed walls

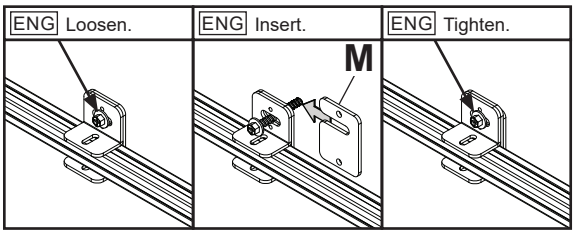

## 5-4

ENG Tie a string between bottom slots on outer columns in order to level the depth of each vertical column.

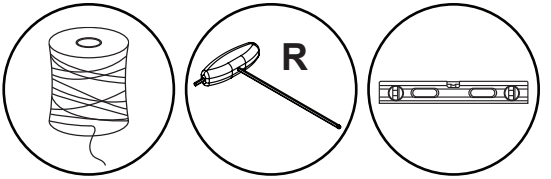


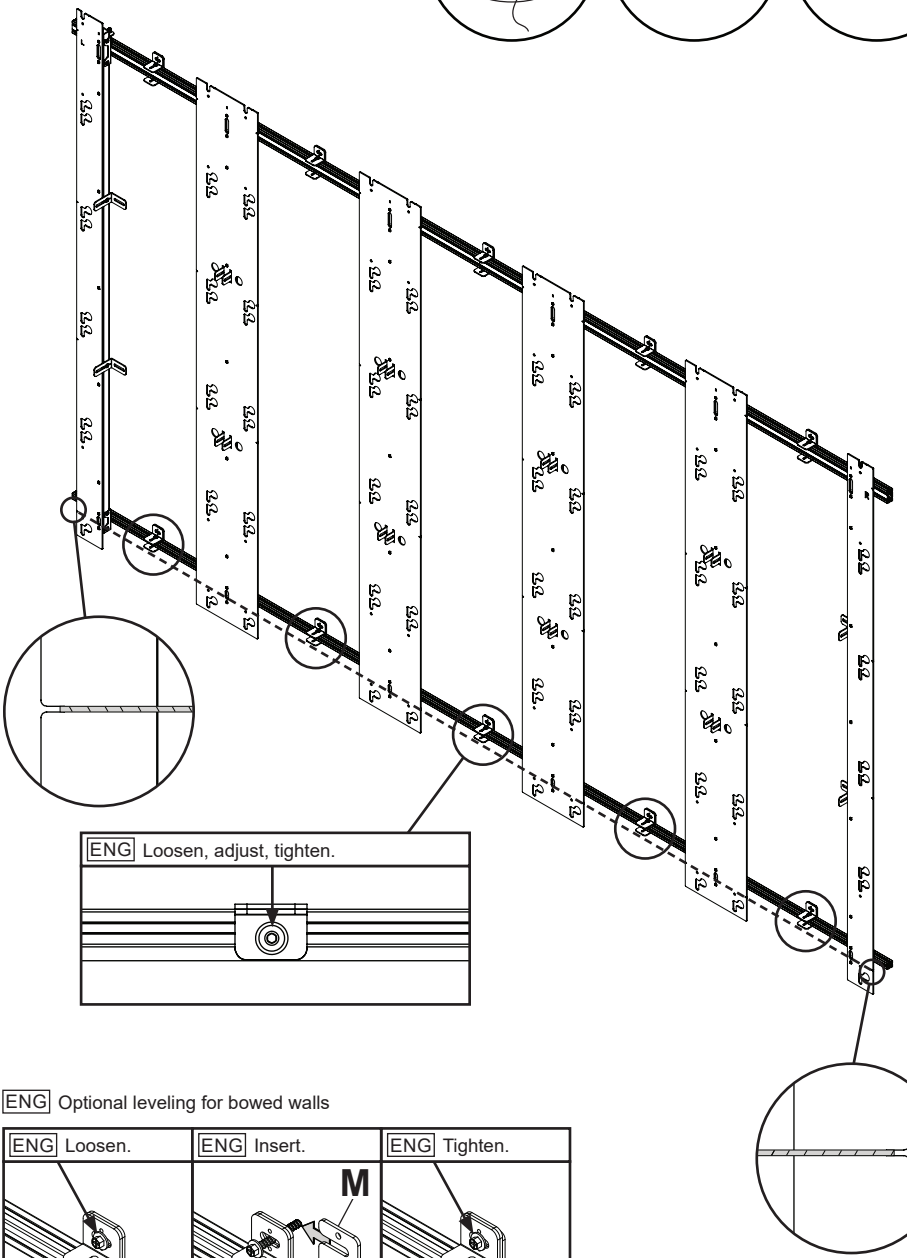

ENG Loosen, adjust, tighten.



ENG Optional leveling for bowed walls

## 5-5

ENG With the string still attached, level the height of each column

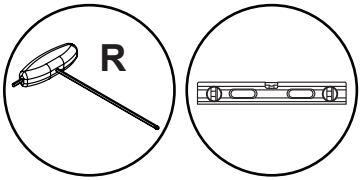


ENG Tighten or loosen to adjust height.

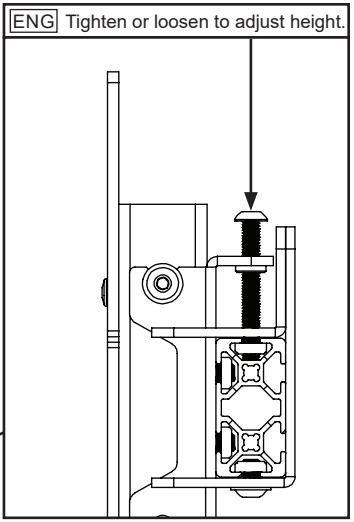

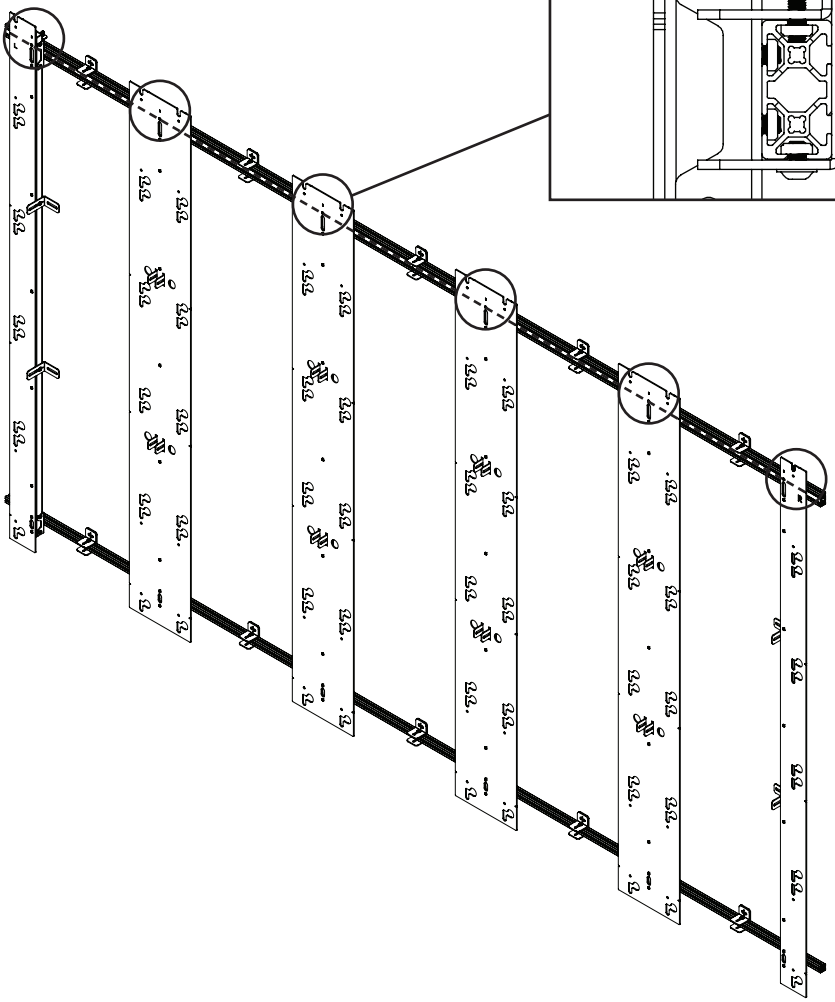

## 5-6

ENG Adjust inner columns to fit horizontal spacers. Tighen column hardware after spacing. Start from the left column.

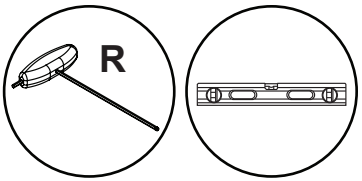


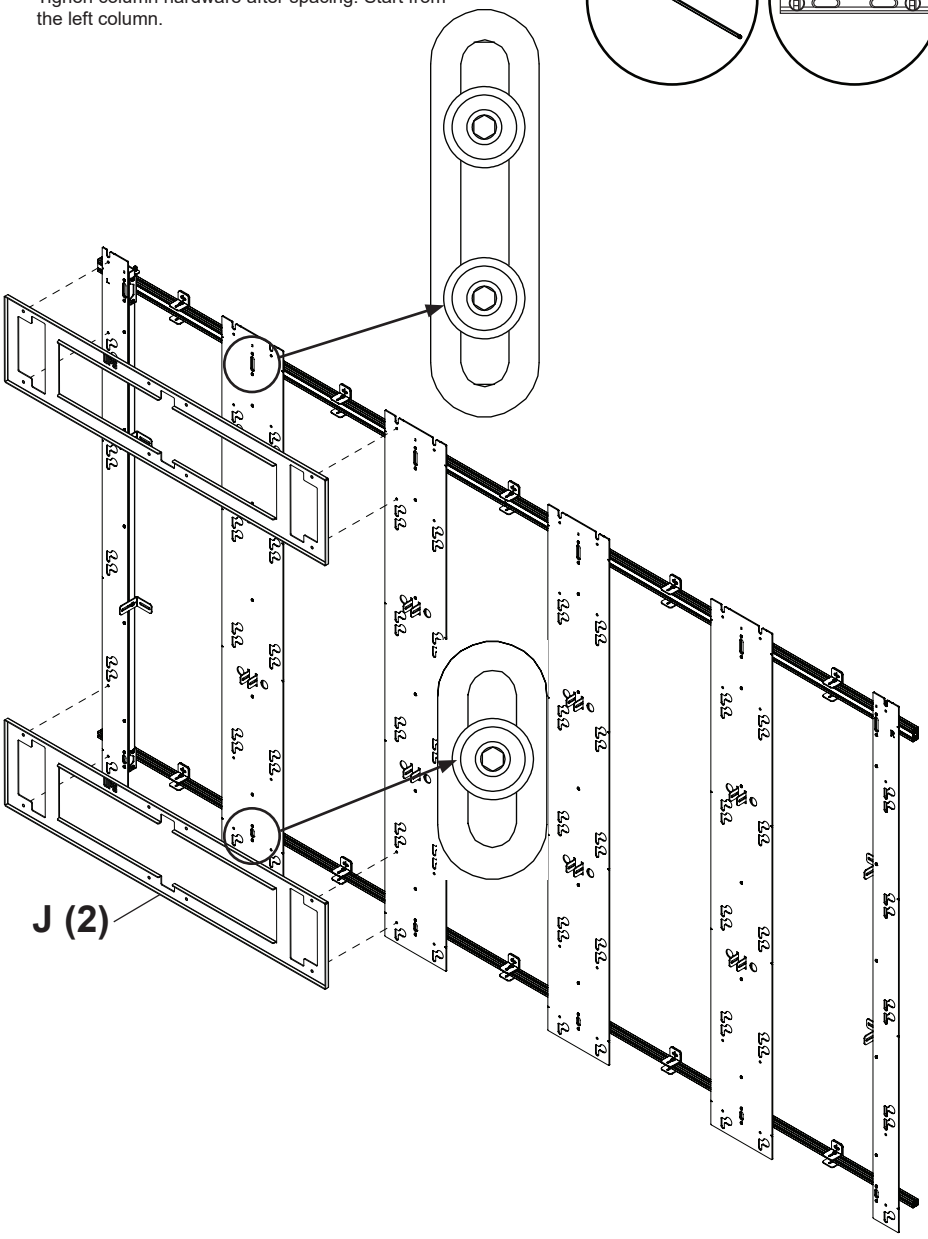

## 5-7

ENG Continue adjusting inner columns to fit horizontal spacers until all are level. Tighen column hardware after spacing

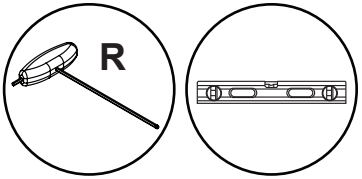


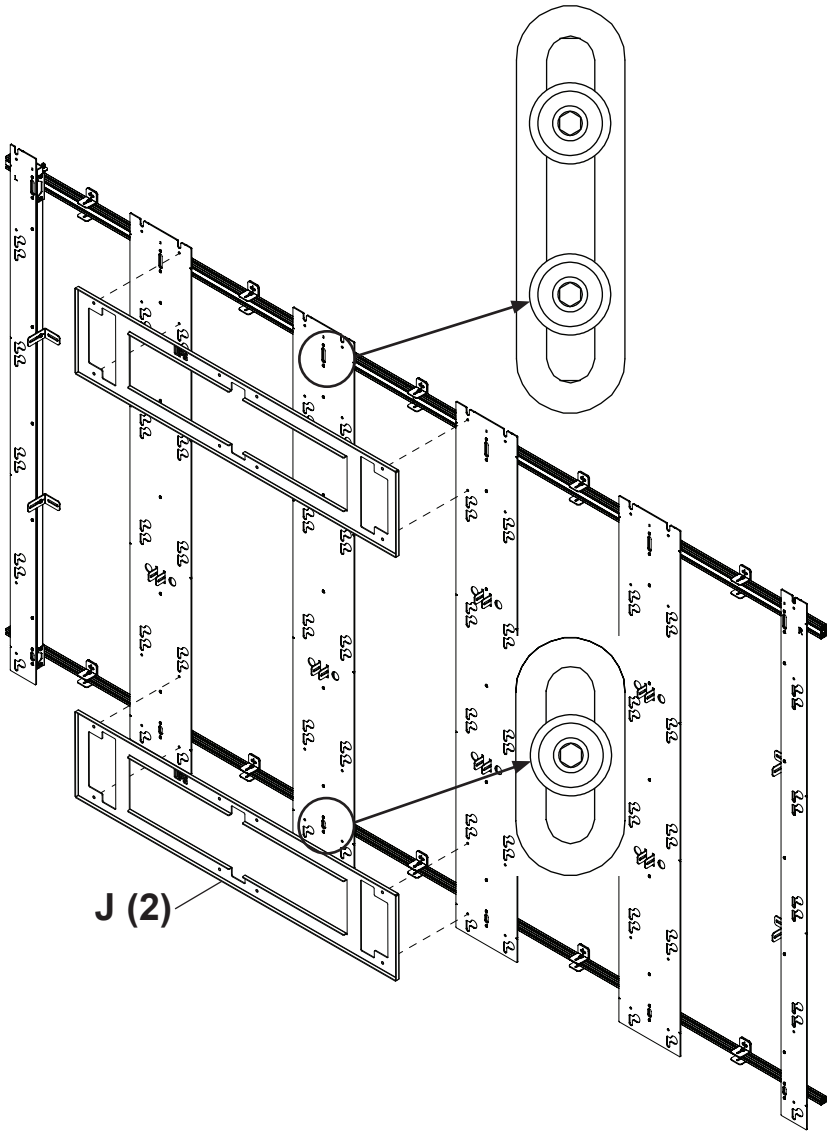

## 5-8

ENG Remove all spacers.

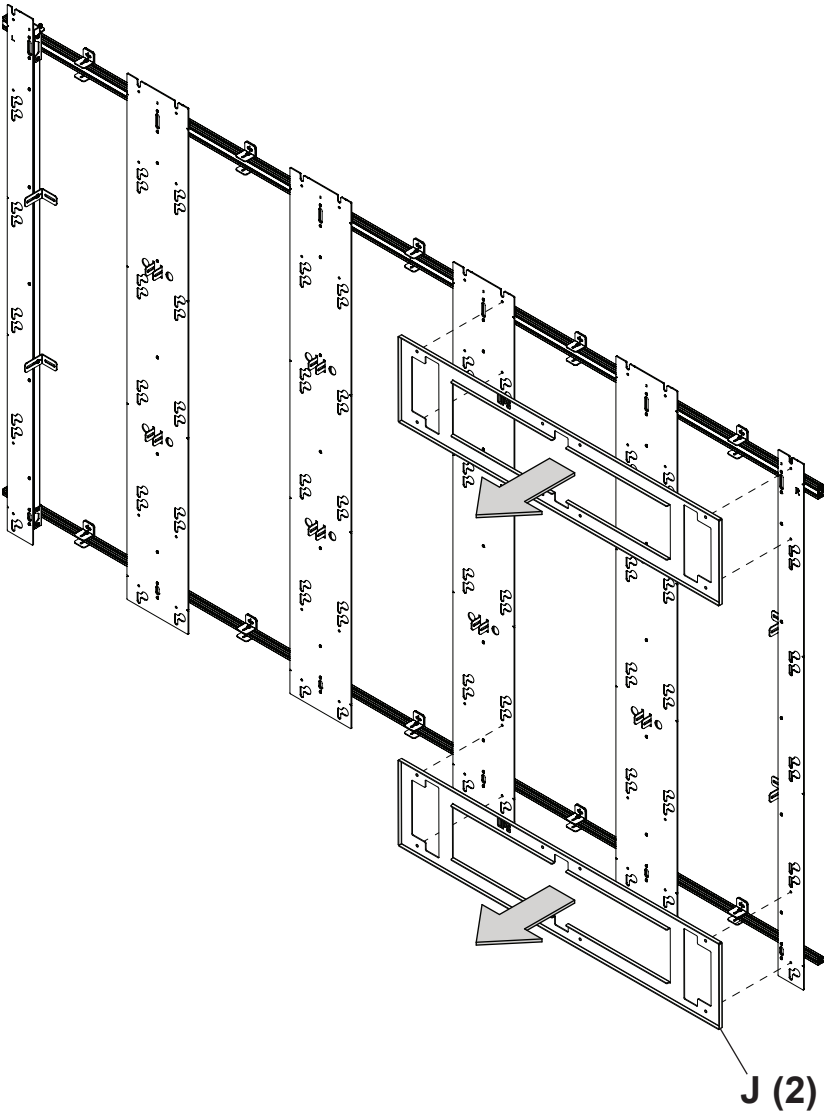

## 6-1

ENG Optional: For shallow depth installations, flip wall bracket orientation as shown.

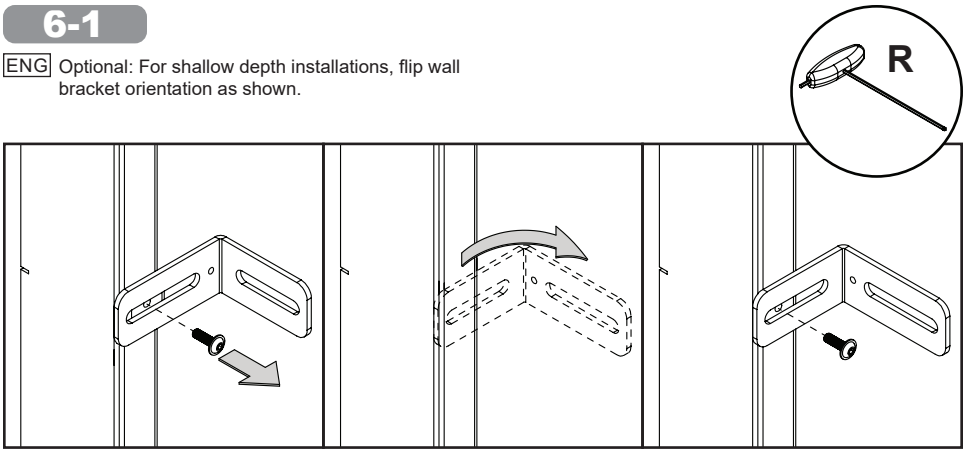


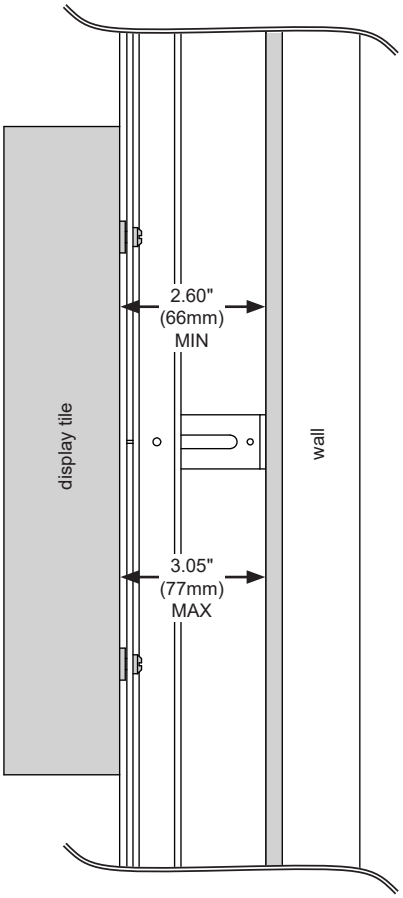


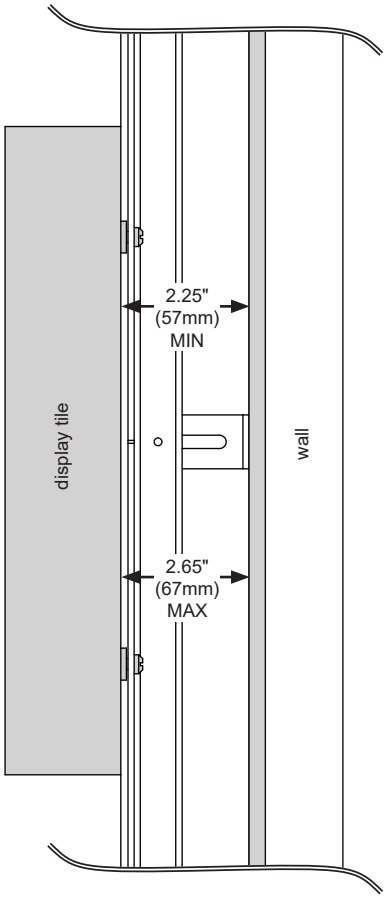

## 6-2

ENG Level L brackets and mark mounting holes on plywood (must be minimum Grade BC, 1/2" (13mm) thick.)

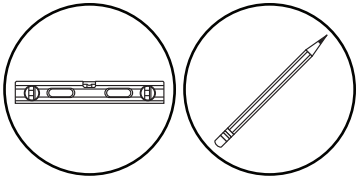

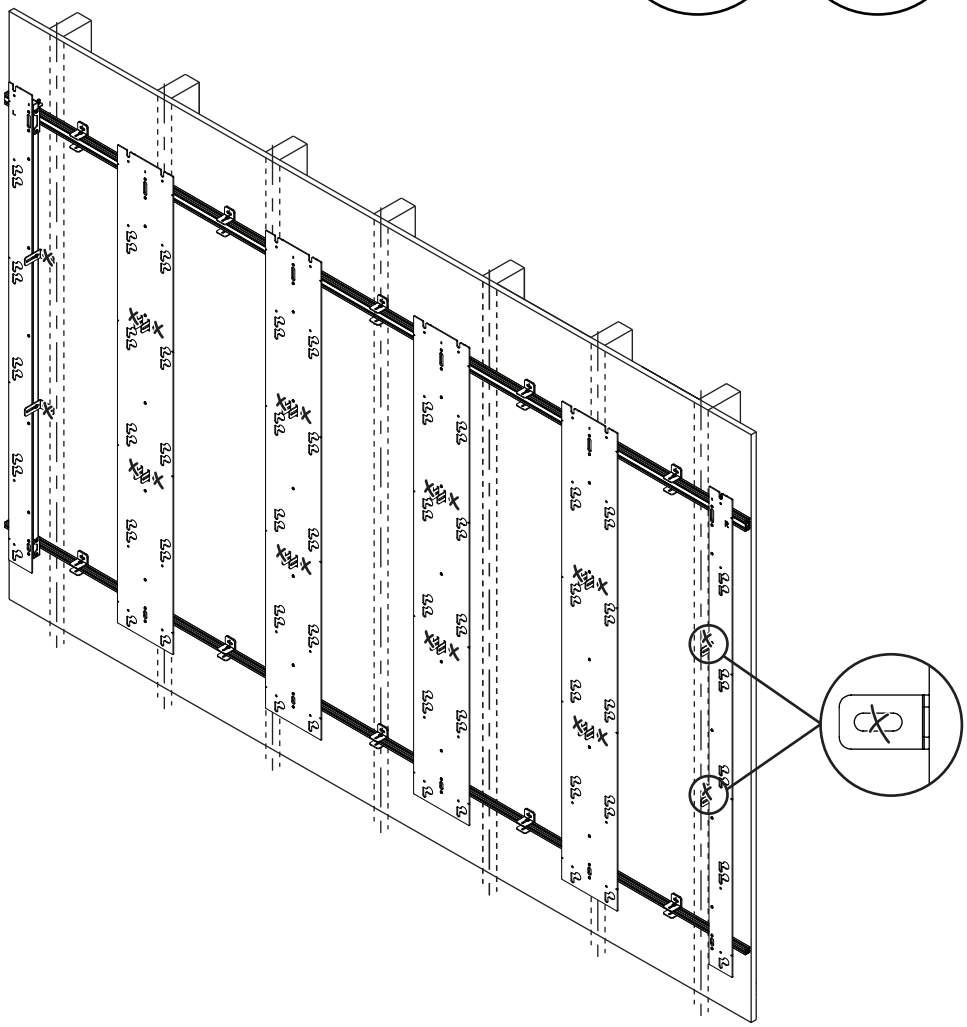

## 6-3




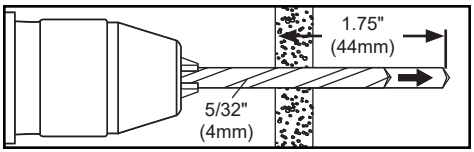


ENG Drill mounting holes into supporting surface (1.75" (44mm) minimum depth required).

## 6-4

ENG Level L brackets. Install using wood screws provided.

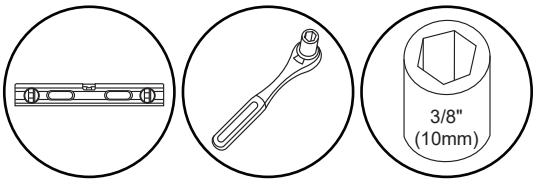


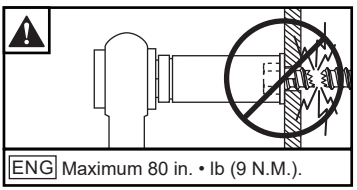

## 6-5

ENG Tie a string between center slots on outer column in order to level the depth of each vertical column.

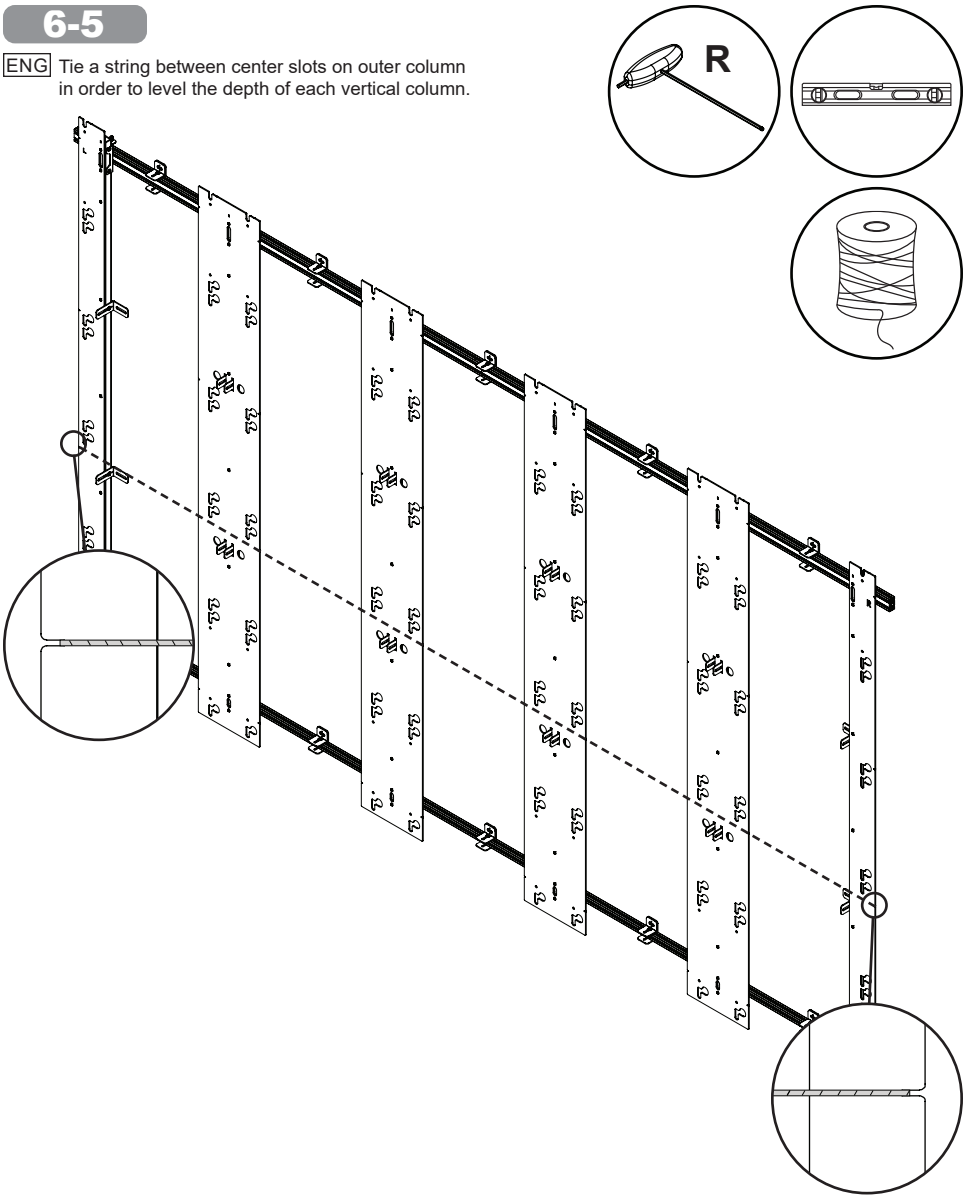

## 6-6

ENG Adjust depth, then remove string.

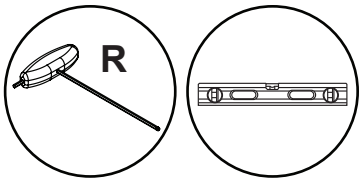


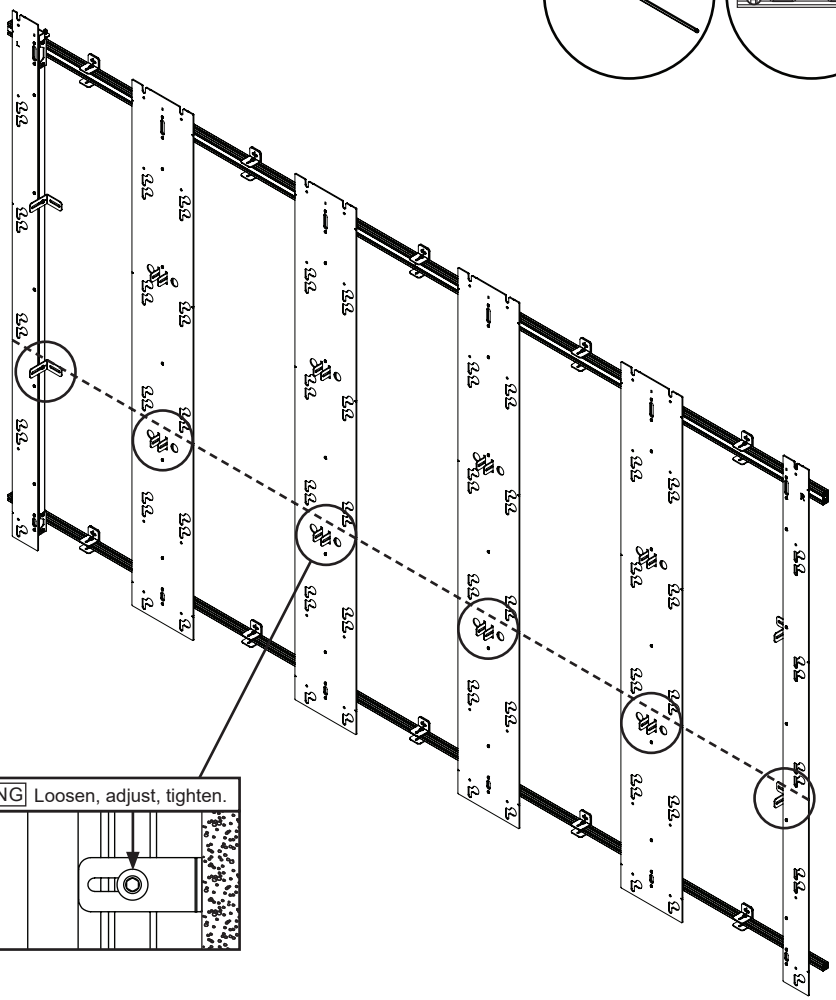

## 7-1

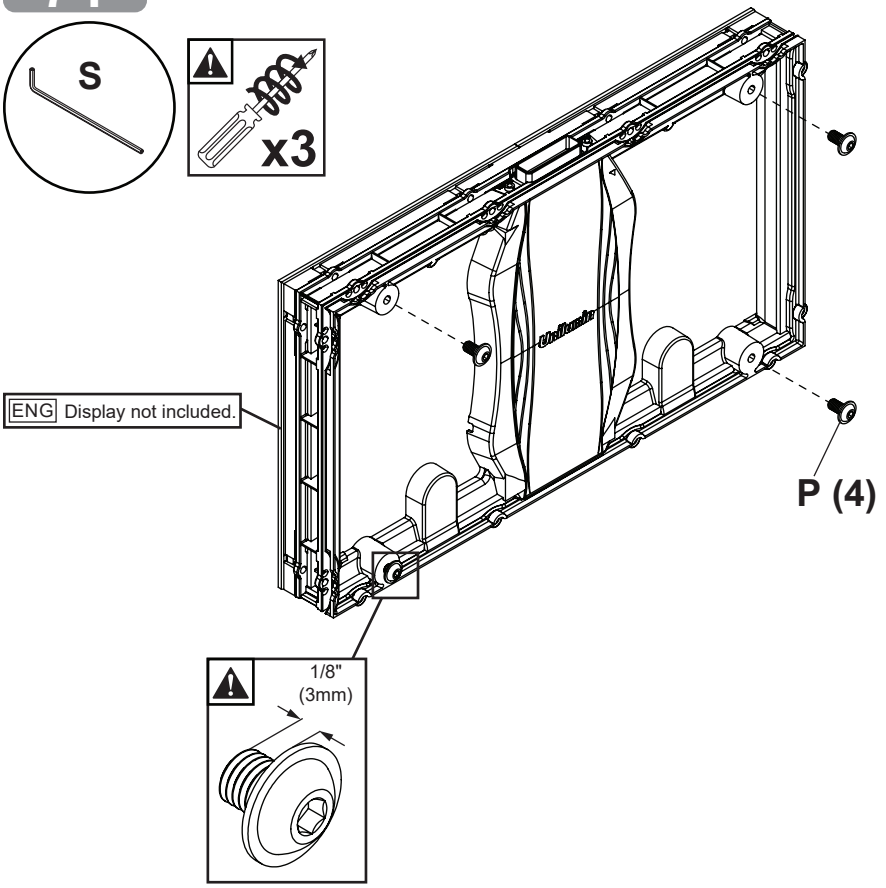

## 7-2

ENG Attach display, tighten connecting hardware, and run cables one at a time starting from the bottom left.

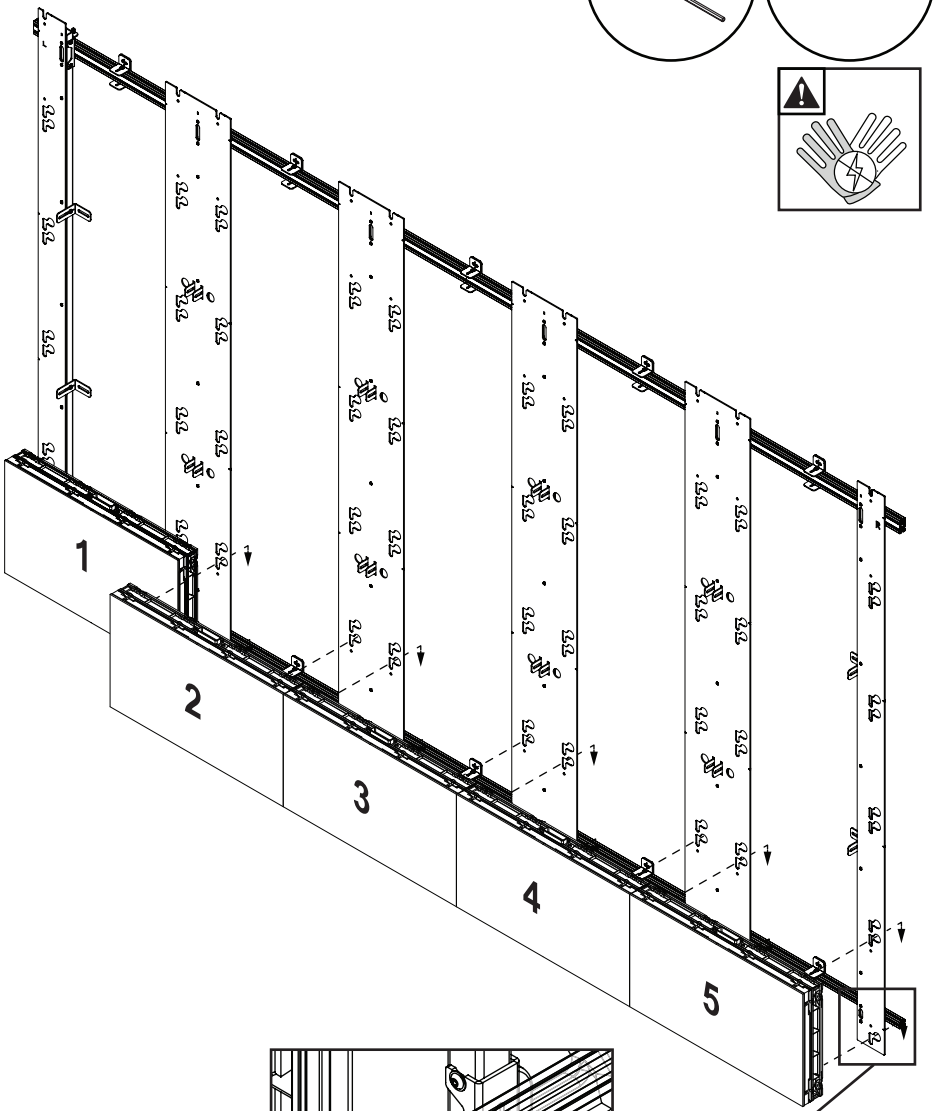

7-3

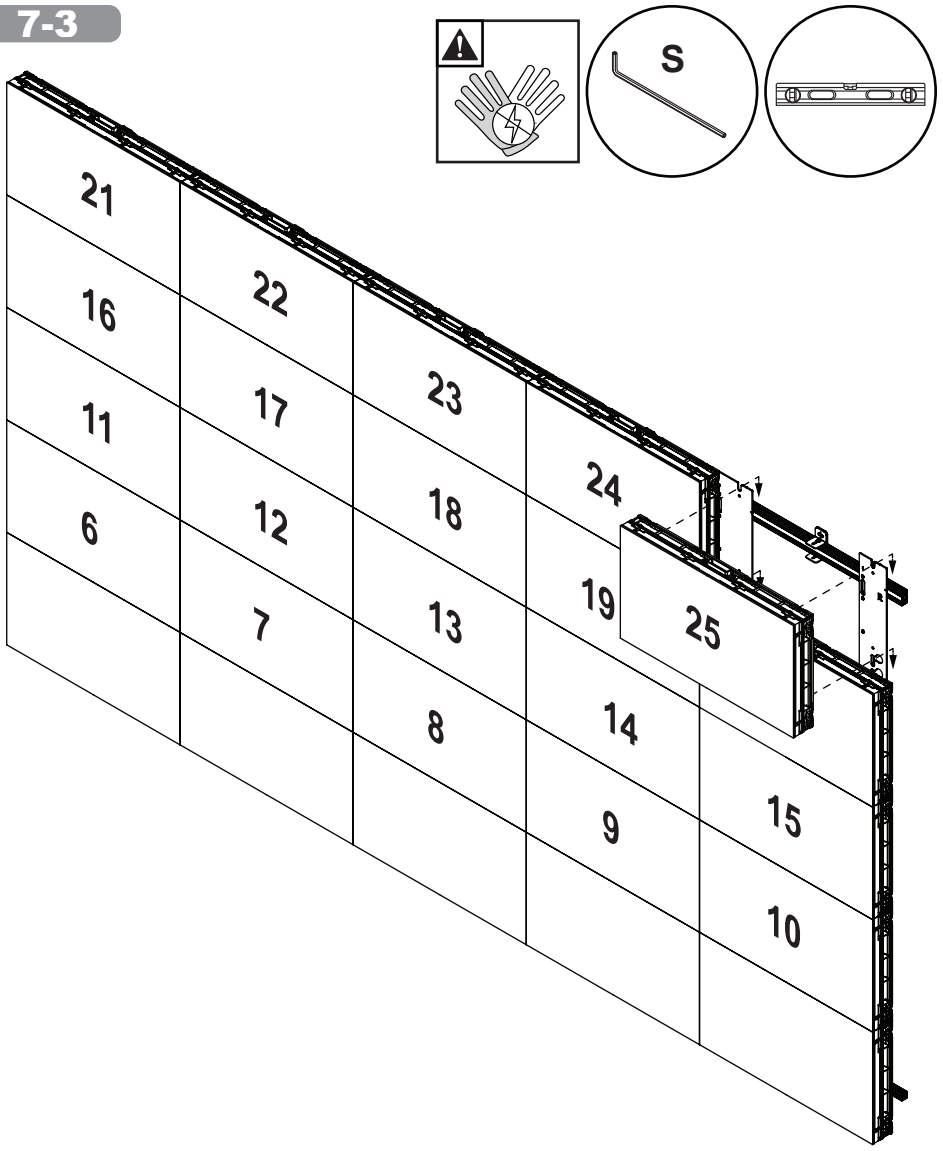

## 8

ENG To remove, start from the top right.

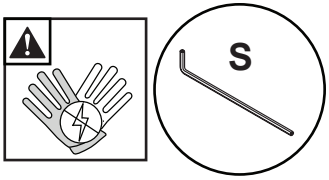


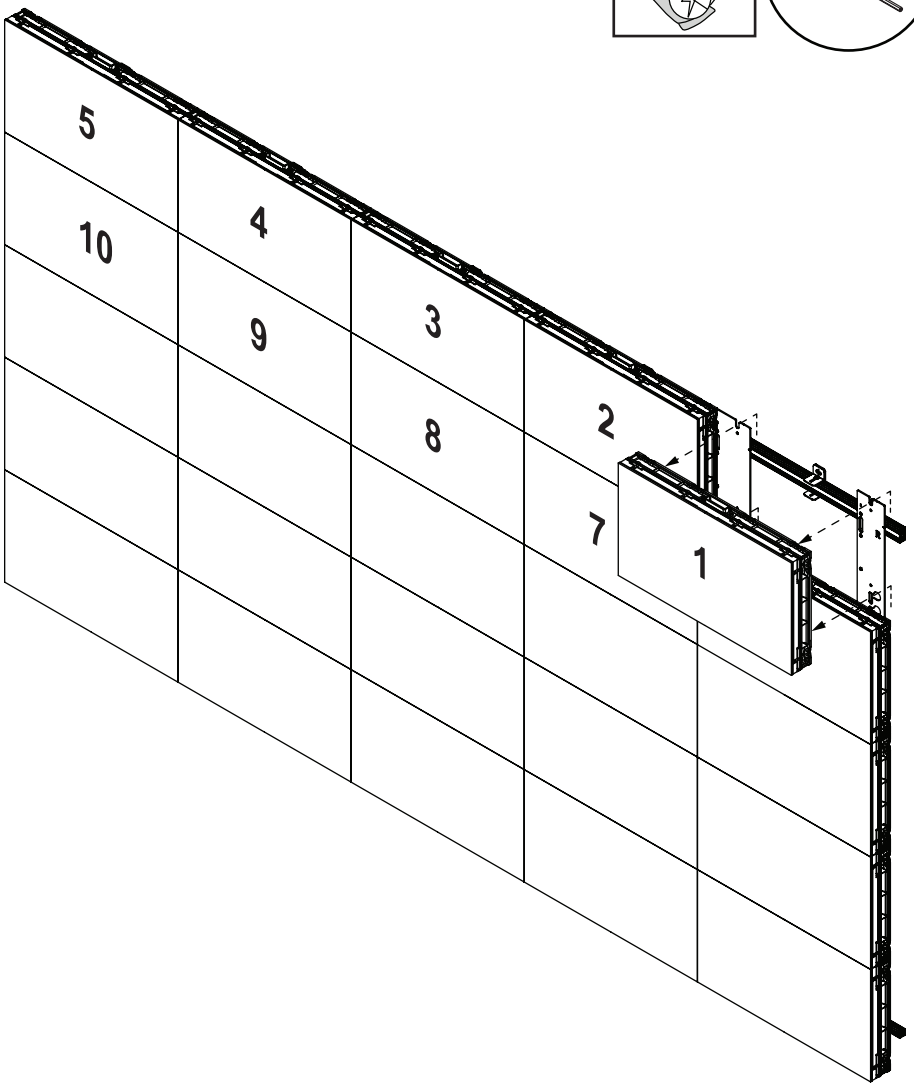

ENG This page intentionally left blank.

| | | | | | | | | | |
|---|---|---|---|---|---|---|---|---|---|
| ENG | Warranty | ESP | Garantía | FRN | Garantie | DEU | Garantie | NEL | Garantie |
| ITL | Garanzia | ČEŠ | Záruka | SLK | Záruka | POR | Garantia | TÜR | Garanti |

**www.peerless-av.com/warranty**


**Peerless-AV**
2300 White Oak Circle
Aurora, IL 60502
Email: tech@peerlessmounts.com
Ph: (800) 865-2112
Fax: (800) 359-6500
www.peerless-av.com


© 2020, Peerless Industries, Inc.


**Peerless-AV Europe**
Unit 3 Watford Interchange,
Colonial Way, Watford, Herts,
WD24 4WP, United Kingdom
Customer Care
44 (0) 1923 200 100
www.peerless-av.com


© 2020, Peerless Industries, Inc.


**Peerless-AV América Latina**
Av. de las Industrias 413
Parque Industrial Escobedo
General Escobedo N.L., México 66062
Servicio al Cliente
01-800-849-65-77
www.peerless-av.com


© 2020, Peerless Industries, Inc.