LogiLink®
PROFESSIONAL



Fiber Adapter SC-Simplex with Laser Protection

Part no.: FA03SC6

Technical Features

SC simplex footprint without flange

PC housing, ceramic sleeve

With laser protection

Color: green

Technical Drawings

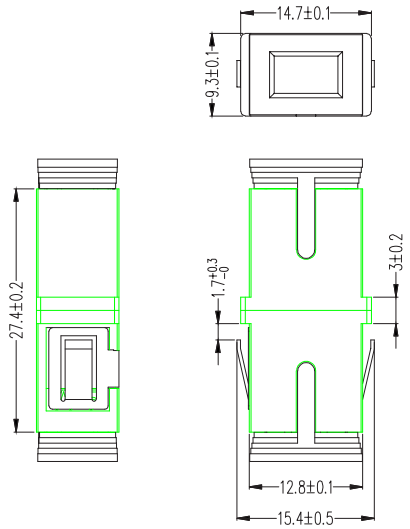

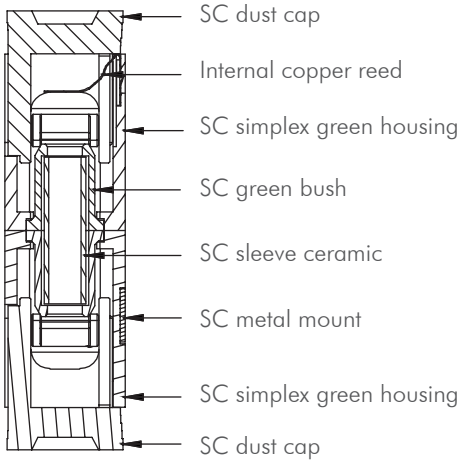

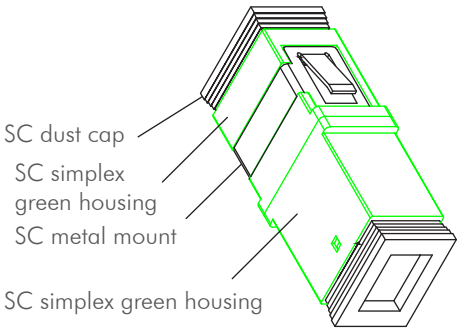

FA03SC6

4 052792 059786

Made in China

www.logilink.de

RoHS compliant

*The specifications and pictures are subject to change without prior notice.
*All trade names referenced are the registered trademarks of their respective owners.

Package Contents

Fiber Adapter SC-Simplex with Laser Protection x 1

Packaging Informations

Packing Dimension	70 x 100mm
Packing Weight	0.004kg
Carton Dimension	450 x 250 x 235mm
Carton Q'ty	500pcs
Carton Weight	2.86kg









FA03SC6

4 052792 059786

Made in China

www.logilink.de

RoHS compliant

*The specifications and pictures are subject to change without prior notice.
*All trade names referenced are the registered trademarks of their respective owners.