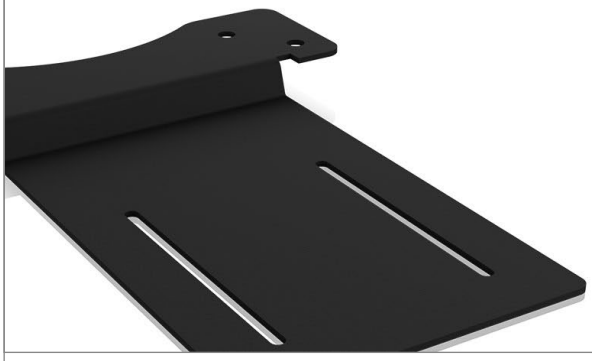



ICY BOX
IB-MSA105-DK

DockingStation VESA mount



Key features

- Convenient extension panel to expand the available VESA mount behind the monitor
- Compatible with standard VESA 75x75 and 100x100 mm monitor mounting brackets
- For more space in your working area
- For horizontal or vertical mounting of your compatible DockingStation
- Supports devices with 50 mm mounting hole distance
- Including four mounting screws

Packing content
1x IB-MSA105-DK, 1x set of screws, 1x quick installation guide

DockingStation VESA mount

The ICY BOX DockingStation VESA mount IB-MSA105-DK is an optional accessory that is ideal for use in combination with ICY BOX monitor stands. The tray attaches easily to most standard VESA 75x 75 / 100x100 mm mounting brackets.
Whether mounted on a table or wall bracket, your DockingStation is perfectly integrated into your existing work environment. The IB-MSA105-DK transforms almost every monitor arm into a variable and ergonomic workstation, at home and in the office.

Technical data

Model	IB-MSA105-DK
Article no.	60777
EAN code	4250078171157
Brand	ICY BOX
Colour	Black
Material	Steel
VESA® support	75x75 and 100x100
Mounting hole distance	50 mm
Supported DockingStation	e.g. IB-DK2405-C or similar devices

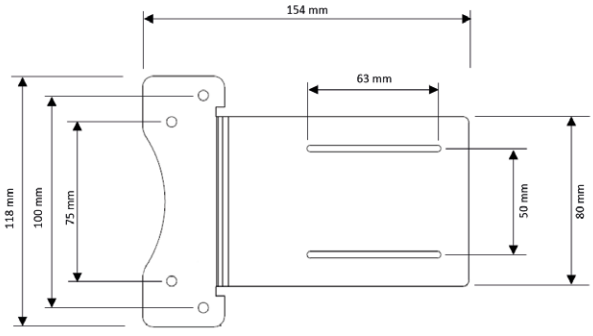

RaidSonic Technology GmbH • Kurt-Fischer-Straße 50 • 22926 Ahrensburg / Germany
Telephone: +49-(0)4102 – 468 900 (Sales) • Fax: +49-(0)4102 – 468 901 • info@raidsonic.de • www.raidsonic.de
Offers and deliveries are only done under our General Terms and Conditions. Errors and omissions excepted.

RaidSonic Technology GmbH

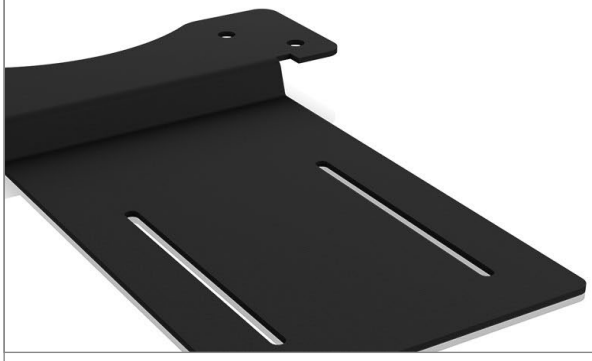



ICY BOX **IB-MSA105-DK**
DockingStation VESA mount

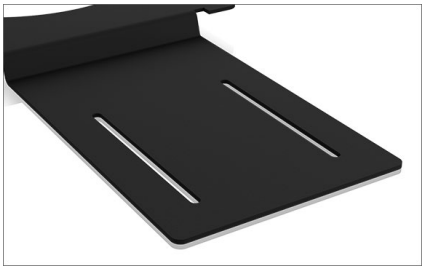

Simply practical

The ICY BOX DockingStation VESA mount is a convenient extension panel designed to expand the available VESA mount behind the monitor.



Effective

Easy to assemble and very useful. The cabling with a DockingStation is tidied up and also provides more space for your work area.

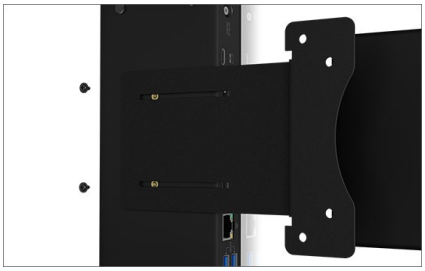

Holds twice

Once you install a monitor arm, the VESA mount on the monitor is usually not available for other purposes. With the IB-MSA105-DK it is now possible to install a DockingStation and a monitor arm behind the monitor.

Logistical data

Packing unit:	40 pcs./carton	**Dimension/Carton:**	358x330x310 mm
Total weight:	9.50 kg/carton	**Dimension** (with packing)**:**	170x140x30 mm
Gross weight: (with packing)**:**	0.153 kg	**Dimension of article:**	155x148x10 mm
Net weight:	0.153 kg	**Country of Origin:**	China

RaidSonic Technology GmbH • Kurt-Fischer-Straße 50 • 22926 Ahrensburg / Germany
Telephone: +49-(0)4102 – 468 900 (Sales) • Fax: +49-(0)4102 – 468 901 • info@raidsonic.de • www.raidsonic.de
Offers and deliveries are only done under our General Terms and Conditions. Errors and omissions excepted.

RaidSonic Technology GmbH